THIS DRAWING IS UNPUBLISHED. RELEASED FOR PUBLICATION 20
© COPYRIGHT 20 BY TYCO ELECTRONICS CORPORATION. ALL RIGHTS RESERVED.

SET UP GAUGE	LOC	DIST
2119599-1	A	66

REVISIONS

P	LTR	DESCRIPTION	DATE	DWN	APVD
	A	RELEASED	21AUG2014	RK	TE

ATLANTIC VERSION TERMINATOR INTERFACE ADAPTER

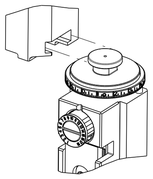

PART NUMBER	REVISION	DESCRIPTION	FEED TYPE
2266391-1	A	FINE CRIMP HEIGHT ADJUST	MECHANICAL
2266391-2	A	FINE CRIMP HEIGHT ADJUST	PNEUMATIC
2266391-5	A	FINE CRIMP HEIGHT ADJUST	SERVO LATCH PLATE 4
2266391-6	A	NON-CRIMP HEIGHT ADJUST	SERVO 4 LATCH PLATE 12
2266391-7	A	FINE CRIMP HEIGHT ADJUST	NONE
7-2266391-7	A	CRIMP TOOLING KIT	-

APPLICATOR STYLE CONVERSION CHART

CONVERT TO	PART NUMBERS REQUIRED					
PNEUMATIC FEED	2119950-1	1338685-1	5-18022-5	2119641-1	2119799-1	2063440-1
SERVO LATCH PLATE	2119951-1	-	8-2266391-5	1901094-3	-	2168400-6 (QUANTITY 2)
SMART APPLICATOR	2161326-1	-	8-2266391-4	-	-	-
MECHANICAL FEED	2119949-1	1338685-1	5-18022-5	2119653-1	-	-
SERVO LATCH PLATE	2119951-1	-	8-2266391-5	1901094-3	-	2168400-6 (QUANTITY 2)
SMART APPLICATOR	2161326-1	-	8-2266391-4	-	-	-
MECHANICAL FEED	2119949-1	1338685-1	5-18022-5	2119653-1	-	-
PNEUMATIC FEED	2119950-1	1338685-1	5-18022-5	2119641-1	2119799-1	2063440-1
-	-	-	-	-	-	-
-	-	-	-	-	-	-
-	-	-	-	-	-	-
-	-	-	-	-	-	-

APPLICATOR DATA

CRIMP	SIZE	TYPE
WIRE	2.79 mm [.110]	F
INSUL	3.94 mm [.155]	F

APPLICATOR INSTRUCTIONS 408-10389

TERMINAL DATA: THB TERMINAL — TE CRIMP SPECIFICATION

TERMINAL NAME: TERMINAL

WIRE STRIP LENGTH	INSULATION DIAMETER RANGE
4.58-5.34 mm [.180-.210 IN]	∅1.62-2.16 mm [.064-.085 IN]

TERMINAL APPLICATION SPECIFICATION	NONE	-	-
	-	-	-

TERMINALS APPLIED

TE TERMINAL	THB TERMINAL	TE TERMINAL	THB TERMINAL
2113506-1	PP0100312		

WIRE SIZE	CRIMP HEIGHT mm [INCH]	CRIMP HEIGHT REFERENCE SETTING 9
1.50mm2	1.60+/-0.05 [.063+/-.002]	7.8
1.00mm2	1.46+/-0.05 [.057+/-.002]	9.3

1 RECOMMENDED SPARE PARTS

2 GREASE BEARING SURFACES LIGHTLY

3. LUBRICATE DAILY PER THE APPLICATOR INSTRUCTION SHEET SUPPLIED WITH THE APPLICATOR.

4 APPLICATOR SPECIFIC DATA TO BE ENTERED INTO BLANK MEMORY CHIP AT ASSEMBLY. SEE BELOW FOR PART NUMBER:
MECHANICAL FEED WITH "SMART APPLICATOR" CONVERSION: 8-2266391-4
PNEUMATIC FEED WITH "SMART APPLICATOR" CONVERSION: 8-2266391-4
SERVO FEED WITH "FINE CRIMP HEIGHT ADJUST": 8-2266391-5
SERVO FEED WITH "NON-CRIMP HEIGHT ADJUST": 8-2266391-6

5. ADJUSTMENT OF THE STRIPPER MAY BE REQUIRED WHEN MOVING THE APPLICATOR BETWEEN BENCH AND LEADMAKER APPLICATIONS.

6 APPLY PART NUMBER 1-23419-5 LOCTITE TO THREADS OF ITEM 62. APPLY PART NUMBER 2-23419-6 LOCTITE TO THREADS OF ITEM 242. FOR -6 ONLY APPLY PART NUMBER 1-23419-5 LOCTITE TO THREADS OF ITEM 37.

7 GREASE THREADS, GROOVE AND O-RING ON ITEMS 35 & 252.

8 MAGNET, ITEM 166 MUST BE ORIENTED CORRECTLY IN ORDER TO PROPERLY ACTUATE THE COUNTER.

9 CRIMP HEIGHT REFERENCE SETTING WAS THE SETTING USED WHEN THE APPLICATOR WAS QUALIFIED AT THE FACTORY. ADJUSTMENT MAY BE NECESSARY WHEN RUNNING APPLICATOR IN THE FIELD.

10 SPARE FEED CAM STORAGE LOCATION REFER TO INSTRUCTION SHEET FOR ADDITIONAL INFORMATION.

11 TO CONVERT THE APPLICATOR TO A NON-CARRIER CUTTING STYLE, REMOVE ITEM 13 AND ATTACH TO THE LOCATION ON THE BACK SIDE OF THE HOUSING. REFER TO INSTRUCTION SHEET FOR ADDITIONAL INFORMATION.

12 WHEN ASSEMBLING A NON CRIMP HEIGHT ADJUST APPLICATOR (-6) USE SHIMS FROM ITEM 260 TO ACHIEVE A NOMINAL SHIM HEIGHT OF 4.20.

*WARNING
ON INSTALLATION, SET WIRE DISC, ITEM 40 TO LARGEST WIRE SIZE SETTING. USE OF SETTINGS BELOW MINIMUM REQUIRED CRIMP HEIGHT SETTING WILL CAUSE DAMAGE TO CRIMP TOOLING.

-77	-7	-6	-5	-2	-1	PART NO	DESCRIPTION	ITEM NO
-	-	1	-	-	-	2119957-2	APPLICATOR SHIM PACK	260

ATLANTIC VERSION
Shown on sheets 1 of 4 & 2 of 4
(Pacific version shown on sheets 3 of 4 & 4 of 4)

-77	-7	-6	-5	-2	-1	PART NO	DESCRIPTION	ITEM NO
-	1	-	1	1	1	8-21084-0	O-RING, .676 ID, .070 DIA. MAT.	252
-	-	-	-	1	-	2119640-1	PUSH ROD, AIR FEED	250
-	-	-	-	1	-	2079988-1	BUSHING, LCH5-12, MISUMI	249
-	-	-	-	1	-	2119641-1	FEED CAM, AIR FEED	248
-	1	-	1	1	1	2119798-1	DETENT PIN	247
-	1	-	1	1	1	1-22279-3	SPRING, COMPRESSION	246
-	-	1	-	-	-	2119758-1	RAM, AMP STYLE, SIDE FEED, NON-ADJ.	245
-	1	1	1	1	1	2119082-4	CAM, SNAIL, INSULATION ADJUSTMENT	244
-	1	1	1	1	1	2079764-1	WASHER, WAVE SPRING, CREST-TO-CREST	243
-	1	1	1	1	1	2119083-1	RETAINER, INSULATION DIAL	242
-	1	1	1	1	1	7-18023-7	SCR, SKT HD CAP M3 X 4.0	241
-	-	2	2	-	-	2168400-6	SHCS, LOW HEAD, RoHS, M5 X 16	240
-	-	-	-	-	1	2119580-1	MECHANICAL FEED ASSEMBLY	239
-	-	-	-	1	-	2063440-1	AIR FEED MODULE	238
-	-	1	1	-	-	2119740-2	TAG,IDENTIFICATION	213
-	-	1	1	-	-	1901094-3	SPACER, FEEDER	198
-	-	-	-	2	-	21045-3	RING, RETAIN, EXTERN, 3/16 CRESCENT	172
-	1	1	1	1	1	994969-1	MAGNET, RARE EARTH HIGH ENERGY	166
-	REF	REF	REF	REF	REF	994970-2	COUNTER, MAGNETIC	164
-	-	-	-	1	-	240638-1	SPRING, FEED FINGER	163
-	-	-	-	1	-	3-23627-7	PIN, RETAIN, GRVD, 3/16 X .854	137
-	-	-	-	1	-	2119799-1	HOLDER,FEED FINGER, AF	136
-	-	REF	REF	-	-	SEE NOTE 4	MEMORY CHIP, PROGRAMMED	135
-	-	1	1	-	-	1633743-1	SERVO FEED LATCH ASM	133
-	-	REF	REF	-	-	2119944-1	FEED FINGER ASSEMBLY,SF	117
-	1	1	1	1	1	455888-5	SPACER, CRIMPER	82
-	1	1	1	1	1	2119956-1	DOCUMENTATION PACKAGE	71
-	1	-	-	1	1	2119740-1	TAG,IDENTIFICATION	67
-	2	2	2	2	2	2168078-1	SCREW, DRIVE, RH, RoHS, 2 x .188	66
-	1	-	1	1	1	2119793-1	LIMITER, ADJUSTMENT BOLT	63
-	3	-	3	3	3	992763-5	SCR, SET, SOC, CONE POINT, M3 x 4.0	62
-	1	1	1	1	1	2079383-4	SCR, BHSC, RoHS (M4 X 8)	60
-	-	-	-	1	1	5-18022-5	SCR, HEX HD CAP, M4 X 6.0	59
-	-	-	-	1	1	1338685-1	PAWL, FEED	56
-	4	4	4	4	4	2168400-1	SHCS, LOW HEAD, RoHS, M4 X 12	54
-	2	2	2	2	2	2168083-8	SCR, SKT HD CAP, RoHS, M4 X 16	53
-	1	1	1	1	1	5018030-1	NUT, HEX, REG, RoHS, M3	52
-	1	1	1	1	1	811242-5	BUMPER, HOLD DOWN	51
-	1	1	1	1	1	690753-2	SPACER, TONKER	50
-	-	-	-	1	2	18023-9	SCR, SKT HD CAP M4 X 6.0	49
-	-	-	-	-	1	2119652-1	FEED CAM, PRE FEED	48
-	-	-	-	-	1	2119653-1	FEED CAM, POST FEED	47
-	1	1	1	1	1	2119656-9	APPLICATOR BASIC ASSEMBLY, SF	46
-	1	-	1	1	1	2119370-1	RAM, AMP STYLE, SIDE FEED	44
-	1	1	1	1	1	2079383-7	SCR, BHSC, RoHS (M8 X 25)	41
-	1	-	1	1	1	2119645-1	DISC, NUMBERED FA WIRE ADJUSTMENT	40
-	1	-	1	1	1	2119957-1	APPLICATOR SHIM PACK	39
-	1	1	1	1	1	1-2119644-2	RAM WASHER, PRECISION	38
-	1	1	1	1	1	2119085-1	FA HEAD, ATLANTIC STYLE	37
-	1	-	1	1	1	2119092-1	BOLT, ADJUSTMENT	35
-	1	1	1	1	1	1752356-6	SUPPORT, TERMINAL	34
-	2	2	2	2	2	2079383-5	SCR, BHSC, RoHS (M4 X 20)	33
-	1	1	1	1	1	2161328-1	HEX HEAD, FLANGED, M5 x 8mm LONG	32
-	1	1	1	1	1	1320908-7	SPACER, STRIP GUIDE	30
-	1	1	1	1	1	2119959-1	ASSEMBLY, STRIP GUIDE	29
-	1	1	1	1	1	455888-3	SPACER, CRIMPER	28
-	1	1	1	1	1	1320928-2	STRIP GUIDE	24
-	1	1	1	1	1	2168083-2	SCR, SKT HD CAP, RoHS, M4 X 8.0	21
-	2	2	2	2	2	1-18028-2	WASHER, FLAT, REG M4	20
-	1	1	1	1	1	2119533-1	STRIPPER, SIDE FEED	19
-	1	1	1	1	1	2119806-1	INSERT, SHEAR	13
-	1	1	1	1	1	3-22280-3	SPRING, COMPRESSION	12
-	1	1	1	1	1	1-356885-4	STOP, SHEAR	11
-	1	1	1	1	1	2119805-1	SHEAR HOLDER, FRONT	10
-	1	1	1	1	1	454276-5	FLOATING SHEAR, FRONT	9
1	1	1	1	1	1	1-1803058-2	ANVIL, COMBINATION	8
-	1	1	1	1	1	1-240641-2	SPACER	7
-	-	-	-	-	-	-	-	6
-	1	1	1	1	1	2119757-4	DEPRESSOR, SHEAR	5
-	1	1	1	1	1	238011-2	BLOCK, CRIMPER SPACER	4
1	1	1	1	1	1	3-2119582-6	CRIMPER, INSULATION F PREMIUM	3
-	1	1	1	1	1	455888-7	SPACER, CRIMPER	2
1	1	1	1	1	1	7-456408-2	CRIMPER, WIRE PREMIUM	1

THIS DRAWING IS A CONTROLLED DOCUMENT FOR TYCO ELECTRONICS CORPORATION. IT IS SUBJECT TO CHANGE. CONTACT THE ORIGINATING ORGANIZATION SHOULD BE CONTACTED FOR THE LATEST REVISION.

DIMENSIONS: mm

TOLERANCES UNLESS OTHERWISE SPECIFIED:
0 PLC ±-
1 PLC ±0.5
2 PLC ±0.13
3 PLC ±0.013
4 PLC ±0.0001
ANGLES ±-

MATERIAL -
FINISH -

DWN	Y YIN	27JUN2014
CHK	G BAILEY	27JUN2014
APVD	U GUO	27JUN2014

PRODUCT SPEC -
APPLICATION SPEC -
WEIGHT -

TE Connectivity
Harrisburg, PA 17105-3608

NAME: Ocean Side Feed Applicator -

SIZE	CAGE CODE	DRAWING NO	RESTRICTED TO
A1	00779	C-2266391	-

Customer Accessible Production Drawing — SCALE 1:2 — SHEET 1 OF 4 — REV A

SHEETS 3 & 4 ARE NOT REQUIRED FOR ATLANTIC VERSION

THIS DRAWING IS UNPUBLISHED. RELEASED FOR PUBLICATION 20
© COPYRIGHT 20 BY TYCO ELECTRONICS CORPORATION. ALL RIGHTS RESERVED.

LOC	DIST
A	66

REVISIONS

P	LTR	DESCRIPTION	DATE	DWN	APVD
	-	SEE SHEET 1	-	-	-

FEED TYPE MECHANICAL

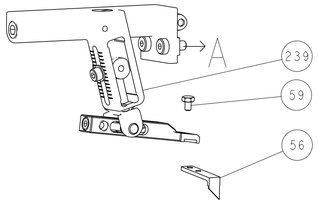

PNEUMATIC

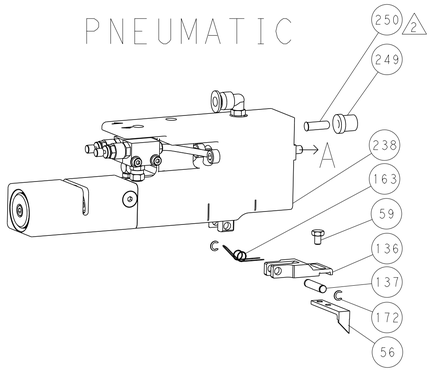

SERVO LATCH PLATE

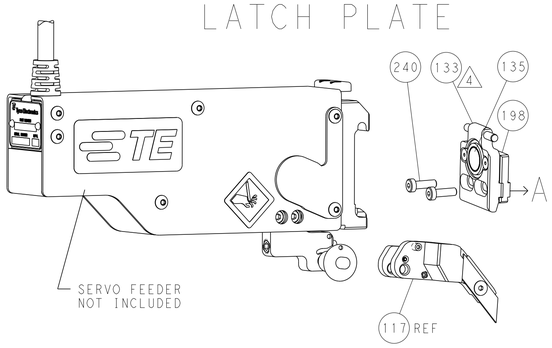

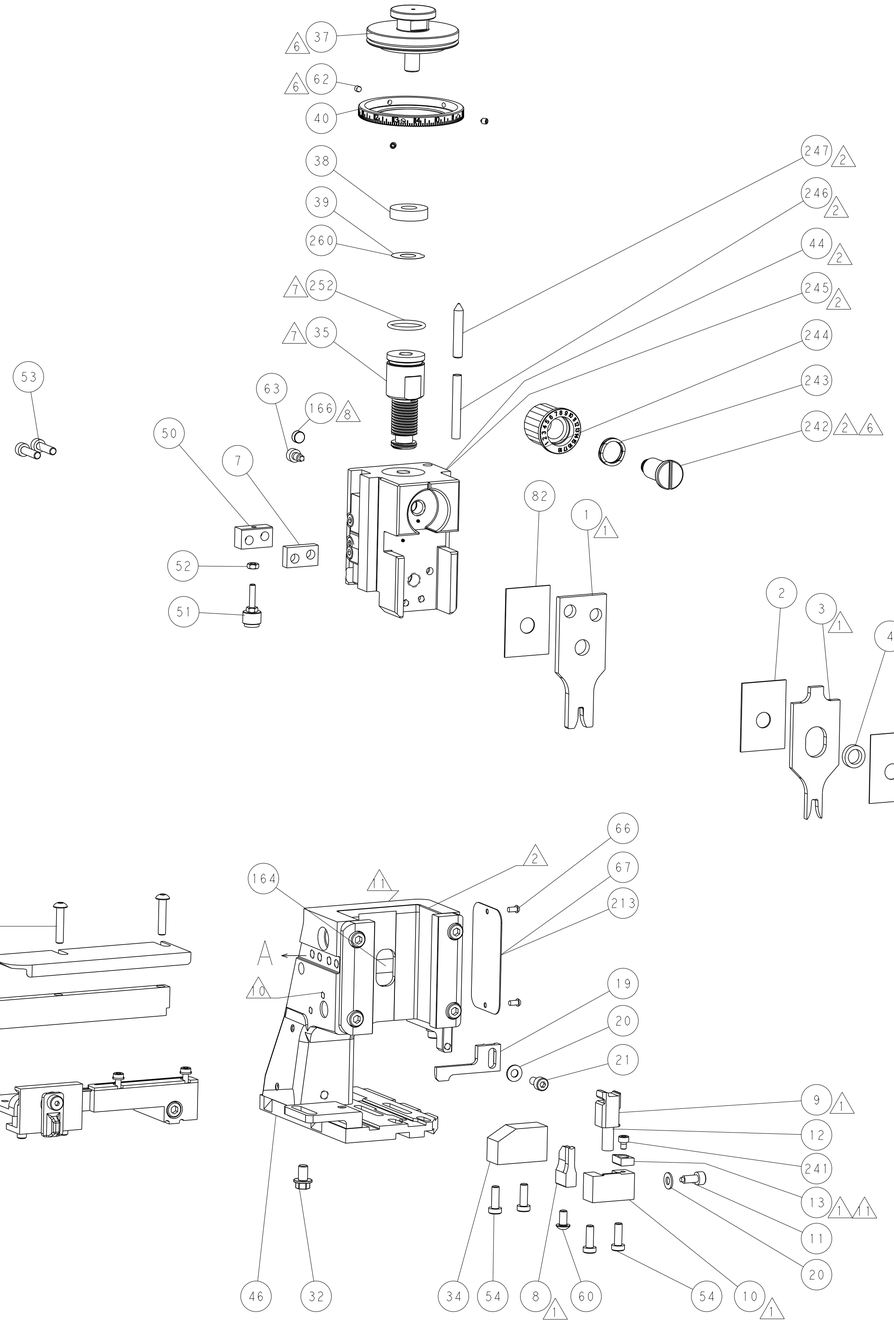

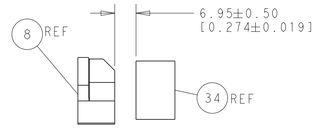

TERMINAL SUPPORT LOCATION

ITEM 30 LOCATED AT FRONT HOLES

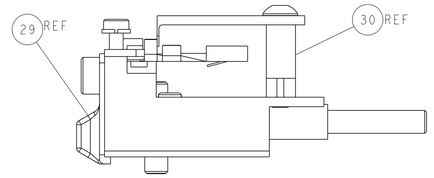

FEED TRACK POSITION GUIDE BY INSULATION BARREL

CAM POSITIONS

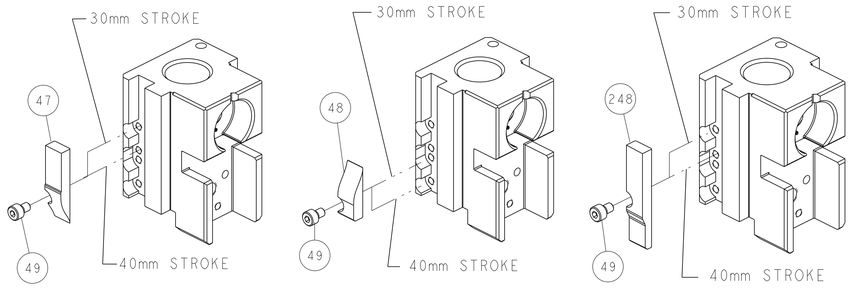

ATLANTIC VERSION

Shown on sheets 1 of 4 & 2 of 4
(Pacific version shown on sheets 3 of 4 & 4 of 4)

THIS DRAWING IS A CONTROLLED DOCUMENT FOR TYCO ELECTRONICS CORPORATION IT IS SUBJECT TO CHANGE AND THE CONTROLLING ENGINEERING ORGANIZATION SHOULD BE CONTACTED FOR THE LATEST REVISION.

DWN	Y.YIN	27JUN2014
CHK	G.BAIELY	27JUN2014
APVD	U.GUO	27JUN2014
PRODUCT SPEC	-	
APPLICATION SPEC	-	
WEIGHT	-	

DIMENSIONS: mm

TOLERANCES UNLESS OTHERWISE SPECIFIED:
0 PLC ±-
1 PLC ±0.5
2 PLC ±0.13
3 PLC ±0.013
4 PLC ±0.0001
ANGLES ±-

MATERIAL - -
FINISH - -

TE Connectivity
Harrisburg, PA 17105-3608

NAME: Ocean Side Feed Applicator -

SIZE	CAGE CODE	DRAWING NO	RESTRICTED TO
A1	00779	C-2266391	-

Customer Accessible Production Drawing | SCALE 1:2 | SHEET 2 OF 4 | REV A

AMP 4805 REV 31MAR2000

SHEETS 3 & 4 ARE NOT REQUIRED FOR ATLANTIC VERSION

THIS DRAWING IS UNPUBLISHED. RELEASED FOR PUBLICATION 20
© COPYRIGHT 20 BY TYCO ELECTRONICS CORPORATION. ALL RIGHTS RESERVED.

PACIFIC VERSION TERMINATOR INTERFACE ADAPTER	PART NUMBER	REVISION	DESCRIPTION	FEED TYPE
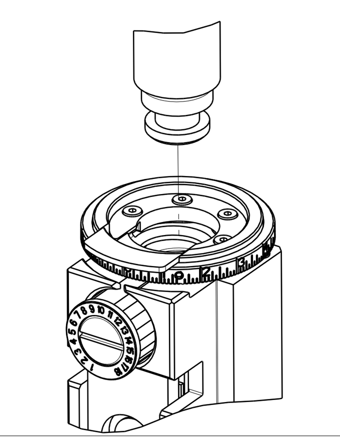	2-2266391-1	A	FINE CRIMP HEIGHT ADJUST	MECHANICAL
	2-2266391-2	A	FINE CRIMP HEIGHT ADJUST	PNEUMATIC
	2-2266391-5	A	FINE CRIMP HEIGHT ADJUST	SERVO LATCH PLATE ⚠4
	2-2266391-7	A	FINE CRIMP HEIGHT ADJUST	NONE
	7-2266391-7	A	CRIMP TOOLING KIT	-

APPLICATOR STYLE CONVERSION CHART

PART NUMBER	CONVERT TO	PART NUMBERS REQUIRED					
2-2266391-1	PNEUMATIC FEED	2119950-1	1338685-1	5-18022-5	2119641-2	2119799-1	2063440-1
	SERVO LATCH PLATE	2119951-1	-	8-2266391-5	1901094-3	-	2168400-6 (QUANTITY 2)
	SMART APPLICATOR	2161326-1	-	8-2266391-4	-	-	-
2-2266391-2	MECHANICAL FEED	2119949-1	1338685-1	5-18022-5	2119653-2	-	-
	SERVO LATCH PLATE	2119951-1	-	8-2266391-5	1901094-3	-	2168400-6 (QUANTITY 2)
	SMART APPLICATOR	2161326-1	-	8-2266391-4	-	-	-
2-2266391-5	MECHANICAL FEED	2119949-1	1338685-1	5-18022-5	2119653-2	-	-
	PNEUMATIC FEED	2119950-1	1338685-1	5-18022-5	2119641-2	2119799-1	2063440-1
2-2266391-7	-	-	-	-	-	-	-
7-2266391-7	-	-	-	-	-	-	-

SET UP GAUGE	LOC	DIST
2119599-1	A	66

REVISIONS

P	LTR	DESCRIPTION	DATE	DWN	APVD
	-	SEE SHEET 1	-	-	-

APPLICATOR DATA

CRIMP	SIZE	TYPE
WIRE	2.79 mm [.110]	F
INSUL	3.94 mm [.155]	F
APPLICATOR INSTRUCTIONS 408-10389		

TERMINAL DATA: THB TERMINAL		TE CRIMP SPECIFICATION	
TERMINAL NAME: TERMINAL			
WIRE STRIP LENGTH 4.58-5.34 mm [.180-.210 IN]		INSULATION DIAMETER RANGE ∅1.62-2.16 mm [.064-.085 IN]	
TERMINAL APPLICATION SPECIFICATION	NONE / -	- / -	- / -
TERMINALS APPLIED			
TE TERMINAL	THB TERMINAL	TE TERMINAL	THB TERMINAL
2113506-1	PP0100312		

WIRE SIZE	CRIMP HEIGHT mm [INCH]	CRIMP HEIGHT REFERENCE SETTING ⚠9
1.50mm2	1.60+/-0.05 [.063+/-.002]	7.8
1.00mm2	1.46+/-0.05 [.057+/-.002]	9.3

⚠1 RECOMMENDED SPARE PARTS

⚠2 GREASE BEARING SURFACES LIGHTLY

3. LUBRICATE DAILY PER THE APPLICATOR INSTRUCTION SHEET SUPPLIED WITH THE APPLICATOR.

⚠4 APPLICATOR SPECIFIC DATA TO BE ENTERED INTO BLANK MEMORY CHIP AT ASSEMBLY. SEE BELOW FOR PART NUMBER:
MECHANICAL FEED WITH "SMART APPLICATOR" CONVERSION: 8-2266391-4
PNEUMATIC FEED WITH "SMART APPLICATOR" CONVERSION: 8-2266391-4
SERVO FEED WITH "FINE CRIMP HEIGHT ADJUST": 8-2266391-5

5. ADJUSTMENT OF THE STRIPPER MAY BE REQUIRED WHEN MOVING THE APPLICATOR BETWEEN BENCH AND LEADMAKER APPLICATIONS.

⚠6 APPLY PART NUMBER 1-23419-5 LOCTITE TO THREADS OF ITEM 62. APPLY PART NUMBER 2-23419-6 LOCTITE TO THREADS OF ITEM 242.

⚠7 GREASE THREADS, GROOVE AND O-RING ON ITEMS 139 & 152.

⚠8 MAGNET MUST BE ORIENTED CORRECTLY IN ORDER TO PROPERLY ACTUATE THE COUNTER.

⚠9 CRIMP HEIGHT REFERENCE SETTING WAS THE SETTING USED WHEN THE APPLICATOR WAS QUALIFIED AT THE FACTORY. ADJUSTMENT MAY BE NECESSARY WHEN RUNNING APPLICATOR IN THE FIELD.

⚠10 SPARE FEED CAM STORAGE LOCATION REFER TO INSTRUCTION SHEET FOR ADDITIONAL INFORMATION.

⚠11 TO CONVERT THE APPLICATOR TO A NON-CARRIER CUTTING STYLE, REMOVE ITEM 13 AND ATTACH TO THE LOCATION ON BACK SIDE OF THE HOUSING. REFER TO INSTRUCTION SHEET FOR ADDITIONAL INFORMATION.

*WARNING
ON INSTALLATION, SET WIRE DISC, ITEM 40 TO LARGEST WIRE SIZE SETTING. USE OF SETTINGS BELOW MINIMUM REQUIRED CRIMP HEIGHT SETTING WILL CAUSE DAMAGE TO CRIMP TOOLING.

NOTE	-77	-27	-25	-22	-21	PART NO	DESCRIPTION	ITEM NO
	-	1	1	1	1	2119782-1	FINE ADJUST HEAD ASM, PACIFIC STYLE	251
	-	-	-	1	-	2119640-1	PUSH ROD, AIR FEED	250
	-	-	-	1	-	2079988-1	BUSHING, LCH5-12, MISUMI	249
	-	1	1	1	1	1-22279-3	SPRING, COMPRESSION	246
	-	1	1	1	1	2119082-4	CAM, SNAIL, INSULATION ADJUSTMENT	244
	-	1	1	1	1	2079764-1	WASHER, WAVE SPRING, CREST-TO-CREST	243
⚠6	-	1	1	1	1	2119083-1	RETAINER, INSULATION DIAL	242
	-	1	1	1	1	7-18023-7	SCR, SKT HD CAP M3 X 4.0	241
	-	-	2	-	-	2168400-6	SHCS, LOW HEAD, RoHS, M5 X 16	240
	-	-	-	-	1	2119580-1	MECHANICAL FEED ASSEMBLY	239
	-	-	-	1	-	2063440-1	AIR FEED MODULE	238
	-	-	1	-	-	2119740-2	TAG,IDENTIFICATION	213
	-	-	1	-	-	1901094-3	SPACER, FEEDER	198
	-	-	-	2	-	21045-3	RING, RETAIN, EXTERN, 3/16 CRESCENT	172
	-	1	1	1	1	994969-1	MAGNET, RARE EARTH HIGH ENERGY	166
	-	REF	REF	REF	REF	994970-2	COUNTER, MAGNETIC	164
	-	-	-	1	-	240638-1	SPRING, FEED FINGER	163
	-	1	1	1	1	8-21084-1	O-RING, .801 ID, .070 DIA. MAT.	152
	-	-	-	1	-	2119641-2	FEED CAM, AIR FEED	151
	-	1	1	1	1	2119798-2	DETENT PIN	145
	-	1	1	1	1	2079383-8	SCR, BHSC, RoHS (M4 X 16)	144
	-	4	4	4	4	2168400-5	SHCS, LOW HEAD, RoHS, M4 X 20	143
	-	-	-	-	1	2119653-2	FEED CAM, POST FEED	142
	-	1	1	1	1	1-2119656-0	APPLICATOR BASIC ASSEMBLY, SF	141
	-	1	1	1	1	2119650-1	RAM, ASIAN STYLE, SIDE FEED	140
	-	1	1	1	1	2119092-2	BOLT, ADJUSTMENT	139
	-	-	-	1	-	3-23627-7	PIN, RETAIN, GRVD, 3/16 X .854	137
	-	-	-	1	-	2119799-1	HOLDER,FEED FINGER, AF	136
	-	-	REF	-	-	SEE NOTE 4	MEMORY CHIP, PROGRAMMED	135
	-	-	1	-	-	1633743-1	SERVO FEED LATCH ASM	133
	-	-	REF	-	-	2119944-1	FEED FINGER ASSEMBLY,SF	117
	-	1	1	1	1	455888-5	SPACER, CRIMPER	82
	-	1	1	1	1	2119956-1	DOCUMENTATION PACKAGE	71
	-	1	-	1	1	2119740-1	TAG,IDENTIFICATION	67
	-	2	2	2	2	2168078-1	SCREW, DRIVE, RH, RoHS, 2 x .188	66
	-	1	1	1	1	2119793-1	LIMITER, ADJUSTMENT BOLT	63
⚠6	-	3	3	3	3	992763-5	SCR, SET, SOC, CONE POINT, M3 x 4.0	62
	-	-	-	1	1	5-18022-5	SCR, HEX HD CAP, M4 X 6.0	59
	-	-	-	1	1	1338685-1	PAWL, FEED	56
	-	2	2	2	2	2168083-8	SCR, SKT HD CAP, RoHS, M4 X 16	53
	-	1	1	1	1	5018030-1	NUT, HEX, REG, RoHS, M3	52
	-	1	1	1	1	811242-5	BUMPER, HOLD DOWN	51
	-	1	1	1	1	690753-2	SPACER, TONKER	50
	-	-	-	1	2	18023-9	SCR, SKT HD CAP M4 X 6.0	49
	-	-	-	-	1	2119652-1	FEED CAM, PRE FEED	48
	-	1	1	1	1	2079383-7	SCR, BHSC, RoHS (M8 X 25)	41
	-	1	1	1	1	2119645-1	DISC, NUMBERED FA WIRE ADJUSTMENT	40
	-	1	1	1	1	2119957-1	APPLICATOR SHIM PACK	39
	-	1	1	1	1	1-2119644-2	RAM WASHER, PRECISION	38
	-	1	1	1	1	1752356-6	SUPPORT, TERMINAL	34
	-	2	2	2	2	2079383-5	SCR, BHSC, RoHS (M4 X 20)	33
	-	1	1	1	1	2161328-1	HEX HEAD, FLANGED, M5 x 8mm LONG	32
	-	1	1	1	1	1320908-7	SPACER, STRIP GUIDE	30
	-	1	1	1	1	2119959-1	ASSEMBLY, STRIP GUIDE	29
	-	1	1	1	1	455888-3	SPACER, CRIMPER	28
	-	1	1	1	1	1320928-2	STRIP GUIDE	24
	-	1	1	1	1	2168083-2	SCR, SKT HD CAP, RoHS, M4 X 8.0	21
	-	2	2	2	2	1-18028-2	WASHER, FLAT, REG M4	20
	-	1	1	1	1	2119533-1	STRIPPER, SIDE FEED	19
⚠1	-	1	1	1	1	2119806-1	INSERT, SHEAR	13
	-	1	1	1	1	3-22280-3	SPRING, COMPRESSION	12
	-	1	1	1	1	1-356885-4	STOP, SHEAR	11
⚠1	-	1	1	1	1	2119805-1	SHEAR HOLDER, FRONT	10
⚠1	-	1	1	1	1	454276-5	FLOATING SHEAR, FRONT	9
⚠1	1	1	1	1	1	1-1803058-2	ANVIL, COMBINATION	8
	-	1	1	1	1	1-240641-2	SPACER	7
	-	-	-	-	-	-	-	6
	-	1	1	1	1	2119757-4	DEPRESSOR, SHEAR	5
	-	1	1	1	1	238011-2	BLOCK, CRIMPER SPACER	4
⚠1	1	1	1	1	1	3-2119582-6	CRIMPER, INSULATION F PREMIUM	3
	-	1	1	1	1	455888-7	SPACER, CRIMPER	2
⚠1	1	1	1	1	1	7-456408-2	CRIMPER, WIRE PREMIUM	1

PACIFIC VERSION
Shown on sheets 3 of 4 & 4 of 4
(Atlantic version shown on sheets 1 of 4 & 2 of 4)

THIS DRAWING IS A CONTROLLED DOCUMENT FOR TYCO ELECTRONICS CORPORATION IT IS SUBJECT TO CHANGE AND THE CONTROLLING ENGINEERING ORGANIZATION SHOULD BE CONTACTED FOR THE LATEST REVISION.

DIMENSIONS:	mm
TOLERANCES UNLESS OTHERWISE SPECIFIED:	0 PLC ±-, 1 PLC ±0.5, 2 PLC ±0.13, 3 PLC ±0.013, 4 PLC ±0.0001, ANGLES ±-
MATERIAL	- -
FINISH	- -
DWN	Y.YIN 27JUN2014
CHK	G.BAILEY 27JUN2014
APVD	U.GUO 27JUN2014
PRODUCT SPEC	-
APPLICATION SPEC	-
WEIGHT	-
	TE Connectivity, Harrisburg, PA 17105-3608
NAME	Ocean Side Feed Applicator -
SIZE	A1
CAGE CODE	00779
DRAWING NO	C-2266391
RESTRICTED TO	-
	Customer Accessible Production Drawing
SCALE	1:2
SHEET	3 OF 4
REV	A

SHEETS 1 & 2 ARE NOT REQUIRED FOR PACIFIC VERSION

AMP 4805 REV 31MAR2000

THIS DRAWING IS UNPUBLISHED. RELEASED FOR PUBLICATION 20
© COPYRIGHT 20 BY TYCO ELECTRONICS CORPORATION. ALL RIGHTS RESERVED.

LOC	DIST
A	66

REVISIONS

P	LTR	DESCRIPTION	DATE	DWN	APVD
	-	SEE SHEET 1	-	-	-

FEED TYPE

MECHANICAL

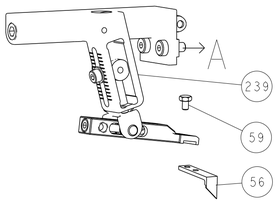

PNEUMATIC

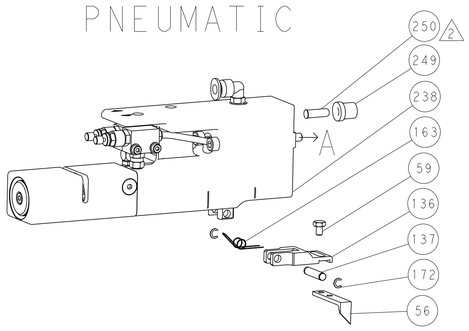

SERVO LATCH PLATE

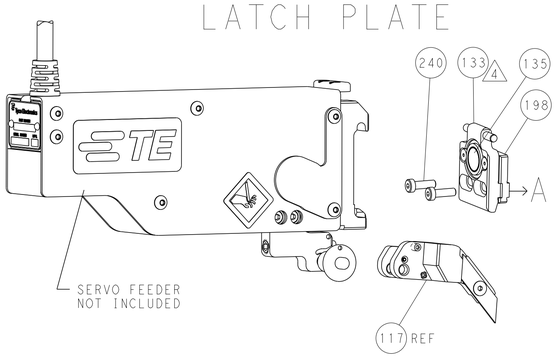

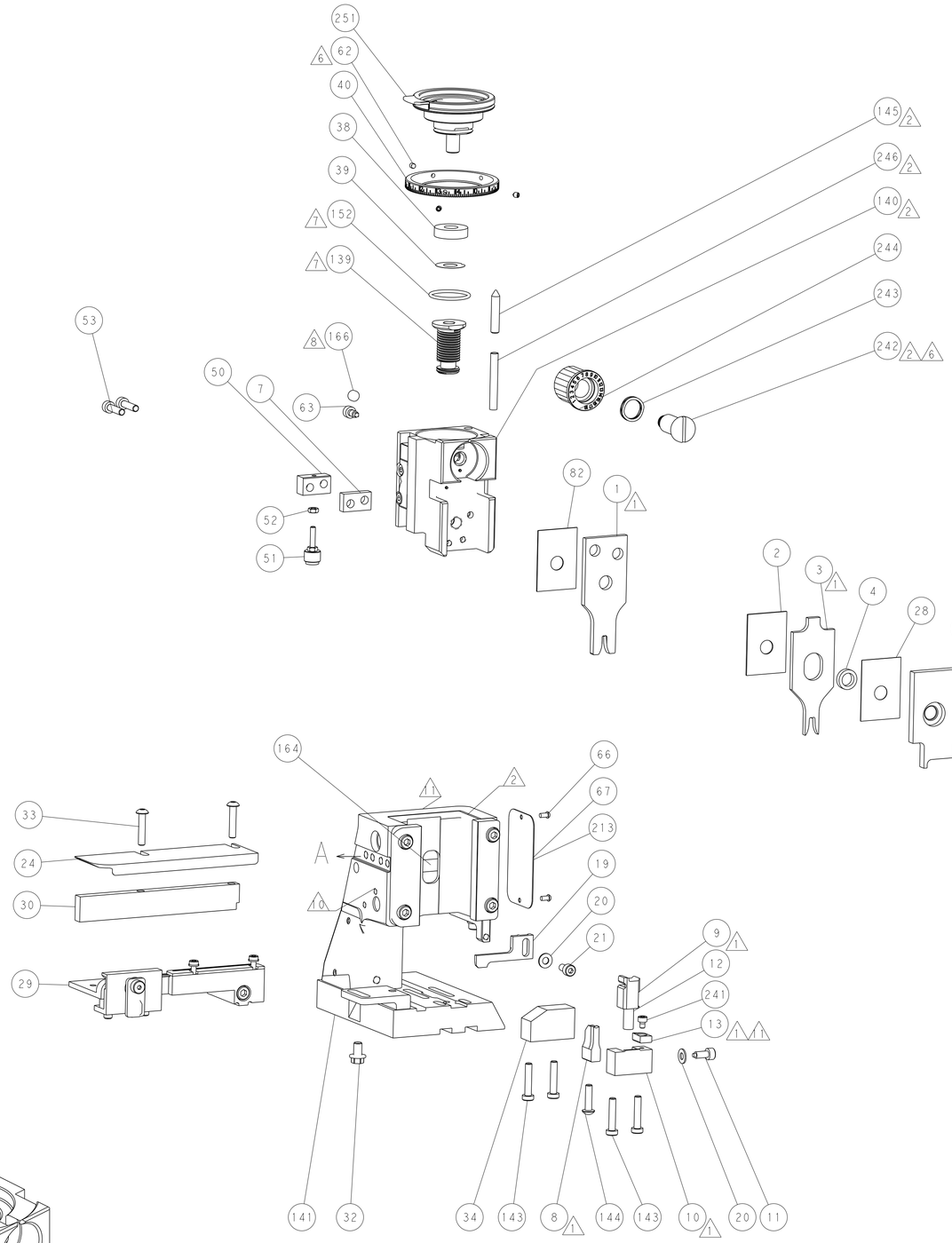

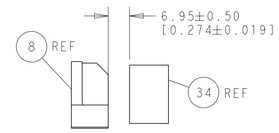

TERMINAL SUPPORT LOCATION

ITEM 30 LOCATED AT
FRONT HOLES

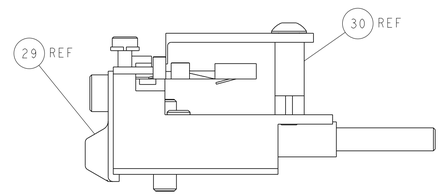

FEED TRACK POSITION
GUIDE BY INSULATION BARREL

CAM POSITIONS

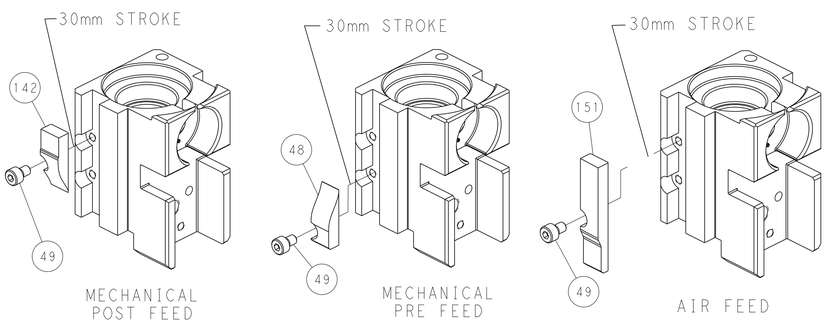

PACIFIC VERSION

Shown on sheets 3 of 4 & 4 of 4
(Atlantic version shown on sheets 1 of 4 & 2 of 4)

THIS DRAWING IS A CONTROLLED DOCUMENT FOR TYCO ELECTRONICS CORPORATION. IT IS SUBJECT TO CHANGE AND THE CONTROLLING ENGINEERING ORGANIZATION SHOULD BE CONTACTED FOR THE LATEST REVISION.

DWN	Y. YIN	27JUN2014
CHK	G. BAILEY	27JUN2014
APVD	U. GUO	27JUN2014

DIMENSIONS: mm

TOLERANCES UNLESS OTHERWISE SPECIFIED:
0 PLC ±-
1 PLC ±0.5
2 PLC ±0.13
3 PLC ±0.013
4 PLC ±0.0001
ANGLES ±-

MATERIAL - -
FINISH - -

PRODUCT SPEC -
APPLICATION SPEC -
WEIGHT -

TE Connectivity
Harrisburg, PA 17105-3608

NAME: Ocean Side Feed Applicator -

SIZE	CAGE CODE	DRAWING NO	RESTRICTED TO
A1	00779	C-2266391	-

Customer Accessible Production Drawing | SCALE 1:2 | SHEET 4 OF 4 | REV A

AMP 4805 REV 31MAR2000

SHEETS 1 & 2 ARE NOT REQUIRED FOR PACIFIC VERSION