Data sheet | Item number: 788-356

Relay module; Nominal input voltage: 24 VDC; 1 make contact; Limiting continuous current: 16 A; for lamp loads; Red status indicator; Module width: 15 mm

www.wago.com/788-356

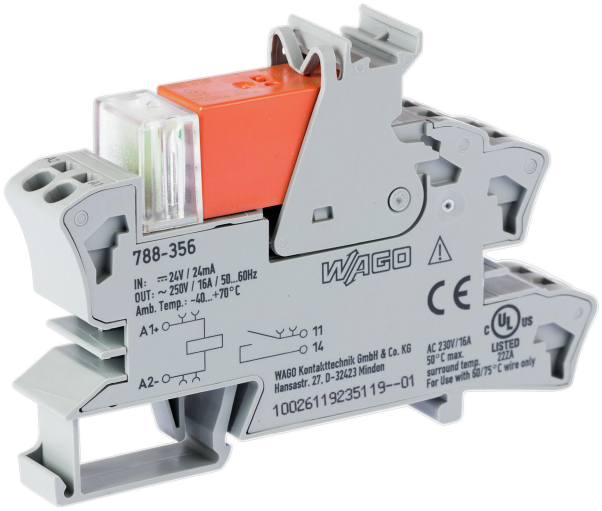

Similar to picture

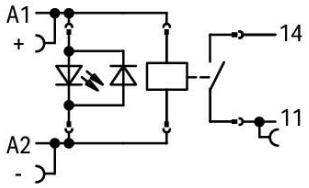

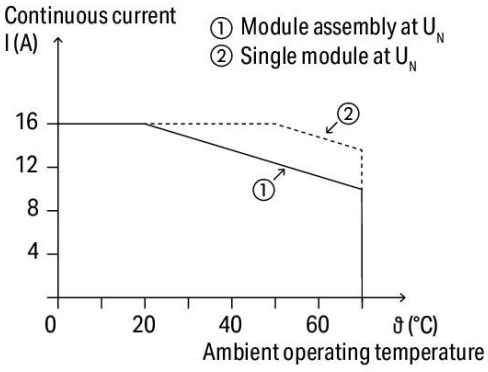

Current-carrying capacity curve

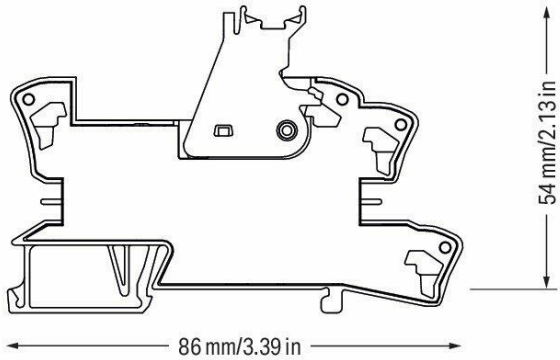

Subject to changes. Please also observe the further product documentation!

WAGO Kontakttechnik GmbH & Co. KG
Hansastr. 27
32423 Minden
Phone: +49571 887-0 | Fax: +49571 887-169
Email: info.de@wago.com | Web: www.wago.com

Do you have any questions about our products?
We are always happy to take your call at +49 (571) 887-44222.

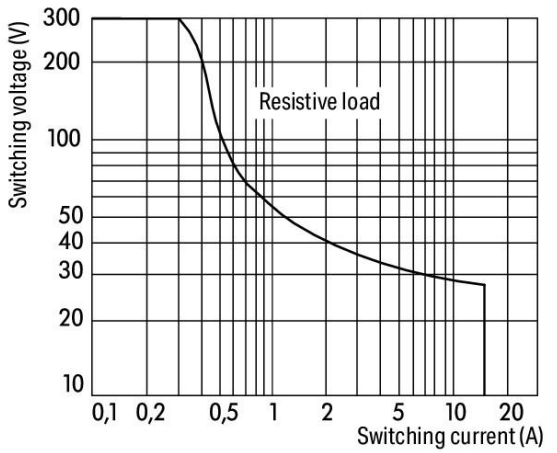

DC load limit curve

Data

Notes

Safety information 1	A separator plate (e.g., 209-191) must be used for voltages greater than 250 V between adjacent relay modules and for compliance with the reinforced insulation requirements.
Note	■ Reinforced insulation between coil and contacts ■ To protect the relay coils and contacts, inductive loads must be dampened with an effective protection circuit.

Technical data

Control circuit

Nominal input voltage U_N	DC 24 V
Input voltage range	-15 … +20 %
Nominal input current at U_N	19 mA

Load circuit

Number of make/switch-on contacts	1
Contact material (relay)	$AgSnO_2$

Subject to changes. Please also observe the further product documentation!

WAGO Kontakttechnik GmbH & Co. KG
Hansastr. 27
32423 Minden
Phone: +49571 887-0 | Fax: +49571 887-169
Email: info.de@wago.com | Web: www.wago.com

Do you have any questions about our products?
We are always happy to take your call at +49 (571) 887-44222.

Limiting continuous current	16 A
Inrush current (resistive) (max.)	(AC) 80 A / 0.02 s; (AC) 30 A / 4 s
Switching voltage (max.)	AC 250 V
Switching power (resistive) (max.)	AC 4000 VA; DC (see load limit curve)
Recommended minimum load	12 V / 100 mA
Pull-in time (typ.)	9 ms
Drop-out time (typ.)	6 ms
Bounce time (typ.)	3 ms
Electrical life (NO; resistive load; 23 °C)	50 x 10^3 switching operations
Mechanical life	30 x 10^6 switching operations

Signaling

Status indicator	Red LED

Safety and protection

Rated voltage	250 V
Rated surge voltage	4 kV
Pollution degree	3
Dielectric strength, control/load circuit (AC, 1 min)	5 kVrms
Dielectric strength, open contact (AC, 1 min)	1 kVrms
Safety information 1	A separator plate (e.g., 209-191) must be used for voltages greater than 250 V between adjacent relay modules and for compliance with the reinforced insulation requirements.
Protection type	IP20

Connection data

Connection technology	Push-in CAGE CLAMP®
Solid conductor	0.34 … 2.5 mm² / 22 … 14 AWG
Fine-stranded conductor	0.34 … 2.5 mm² / 22 … 14 AWG
Strip length	9 … 10 mm / 0.35 … 0.39 inch

Physical data

Width	15 mm / 0.591 inch
Height	86 mm / 3.386 inch
Depth from upper edge of DIN-rail	54 mm / 2.126 inch

Subject to changes. Please also observe the further product documentation!

WAGO Kontakttechnik GmbH & Co. KG
Hansastr. 27
32423 Minden
Phone: +49571 887-0 | Fax: +49571 887-169
Email: info.de@wago.com | Web: www.wago.com

Do you have any questions about our products?
We are always happy to take your call at +49 (571) 887-44222.

Mechanical data

Mounting type	DIN-35 rail

Material data

Fire load	0.676 MJ
Weight	46.8 g

Environmental requirements

Surrounding air temperature (operation at U_N)	-40 … 70 °C
Surrounding air (operating) temperature for UL	-40 … 50 °C
Surrounding air temperature (storage)	-40 … 70 °C
Processing temperature	-25 … +50 °C

Standards and specifications

Standards/Specifications	EN 61010-2-201 EN 61810-1 EN 61373 UL 508 (max. 10 A)

Commercial data

Product Group	6 (Interface Electronics)
PU (SPU)	20 (1) Stück
Packaging type	box
Country of origin	DE
GTIN	4045454540753
Customs tariff number	85364900990

Approvals / Certificates

UL-Approvals

Logo	Approval	Additional Approval Text	Certificate name
	UL UL International Netherlands B.V. (ORDINARY LOCATIONS)	UL 508	E175199 Sec.6

WAGO Kontakttechnik GmbH & Co. KG
Hansastr. 27
32423 Minden
Phone: +49571 887-0 | Fax: +49571 887-169
Email: info.de@wago.com | Web: www.wago.com

Optional accessories

Jumpers

Jumper

	**Item no.: 788-116** Jumper; for jumper slot; 6-way; insulated	www.wago.com/788-116
	**Item no.: 788-117** Jumper; for jumper slot; 8-way; insulated	www.wago.com/788-117
	**Item no.: 788-114** Jumper; for jumper slot; 3-way; insulated	www.wago.com/788-114
	**Item no.: 788-113** Jumper; for jumper slot; 2-way; insulated	www.wago.com/788-113
	**Item no.: 788-115** Jumper; for jumper slot; 4-way; insulated	www.wago.com/788-115
	**Item no.: 859-402** Jumper; for jumper slot; 2-way; insulated; light gray	www.wago.com/859-402
	**Item no.: 788-118** Jumper; for jumper slot; from 1 to 3; insulated	www.wago.com/788-118

Marking accessories

Marking strip

	**Item no.: 2009-110** Marking strips; for Smart Printer; on reel; not stretchable; plain; snap-on type; white	www.wago.com/2009-110

Marking device

	**Item no.: 210-110** Fiber-tip pen	www.wago.com/210-110

Double marker carrier

	**Item no.: 209-128** Adaptor; gray	www.wago.com/209-128

Protective marker cover

	Item no.: 209-184 Protection cover; transparent	www.wago.com/209-184

Marker

	**Item no.: 2009-115** WMB-Inline; for Smart Printer; 1500 pieces on roll; stretchable 5 - 5.2 mm; plain; snap-on type; white	www.wago.com/2009-115

Subject to changes. Please also observe the further product documentation!

WAGO Kontakttechnik GmbH & Co. KG
Hansastr. 27
32423 Minden
Phone: +49571 887-0 | Fax: +49571 887-169
Email: info.de@wago.com | Web: www.wago.com

Do you have any questions about our products?
We are always happy to take your call at +49 (571) 887-44222.

	**Item no.: 209-183** Marker card; white	www.wago.com/209-183
	Item no.: 793-501 WMB marking card; as card; not stretchable; plain; snap-on type; white	www.wago.com/793-501
	**Item no.: 793-502** WMB marking card; as card; MARKED; 1 ... 10 (10x); not stretchable; Horizontal marking; snap-on type; white	www.wago.com/793-502
	Item no.: 793-503 WMB marking card; as card; MARKED; 11 ... 20 (10x); not stretchable; Horizontal marking; snap-on type; white	www.wago.com/793-503
	Item no.: 793-504 WMB marking card; as card; MARKED; 21 ... 30 (10x); not stretchable; Horizontal marking; snap-on type; white	www.wago.com/793-504
	Item no.: 793-505 WMB marking card; as card; MARKED; 31 ... 40 (10x); not stretchable; Horizontal marking; snap-on type; white	www.wago.com/793-505
Group marker carrier		
	**Item no.: 209-145** Group marker carrier; white	www.wago.com/209-145
	**Item no.: 249-105** Group marker carrier; gray	www.wago.com/249-105
Tool		
Operating tool		
	**Item no.: 210-720** Operating tool; Blade: 3.5 x 0.5 mm; with a partially insulated shaft; multicoloured	www.wago.com/210-720
Ferrule		
Ferrule		
	**Item no.: 216-241** Ferrule; Sleeve for 0.5 mm² / 20 AWG; insulated; electro-tin plated; electrolytic copper; gastight crimped; acc. to DIN 46228, Part 4/09.90; white	www.wago.com/216-241
	**Item no.: 216-242** Ferrule; Sleeve for 0.75 mm² / 18 AWG; insulated; electro-tin plated; electrolytic copper; gastight crimped; acc. to DIN 46228, Part 4/09.90; gray	www.wago.com/216-242
	**Item no.: 216-243** Ferrule; Sleeve for 1 mm² / AWG 18; insulated; electro-tin plated; electrolytic copper; gastight crimped; acc. to DIN 46228, Part 4/09.90; red	www.wago.com/216-243
	**Item no.: 216-244** Ferrule; Sleeve for 1.5 mm² / AWG 16; insulated; electro-tin plated; electrolytic copper; gastight crimped; acc. to DIN 46228, Part 4/09.90; black	www.wago.com/216-244

Subject to changes. Please also observe the further product documentation!

WAGO Kontakttechnik GmbH & Co. KG
Hansastr. 27
32423 Minden
Phone: +49571 887-0 | Fax: +49571 887-169
Email: info.de@wago.com | Web: www.wago.com

Do you have any questions about our products?
We are always happy to take your call at +49 (571) 887-44222.



Item no.: 216-542
Twin ferrule; Sleeve for 2 x 1 mm² / AWG 2 x 18; red, insulated; 12 mm long; red
www.wago.com/216-542

Indicators

Operation status indicator

Item no.: 788-120
Accessories for relay modules; Operation status indicator: red; Nominal operating voltage: 24 VDC
www.wago.com/788-120

Downloads

Documentation

Bid Text

788-356 docx - Datei	2019. 1. 25.	docx 17.0 kB	Download
788-356 X81 - Datei	2019. 2. 19.	xml 5.0 kB	Download

Instruction Leaflet

Sockets with Elementary Relay/ SSR	V 1.0.1 2020. 10. 9.	pdf 2.3 MB	Download

Additional Information

Disposal; Electrical and electronic equipment, Packaging	V 1.0.0	pdf 265.8 kB	Download

CAD/CAE-Data

CAE data

EPLAN Data Portal 788-356	URL	Download
WSCAD Universe 788-356	URL	Download
ZUKEN Portal 788-356	URL	Download

CAD data

2D/3D Models 788-356	URL	Download

Subject to changes. Please also observe the further product documentation!

WAGO Kontakttechnik GmbH & Co. KG
Hansastr. 27
32423 Minden
Phone: +49571 887-0 | Fax: +49571 887-169
Email: info.de@wago.com | Web: www.wago.com

Do you have any questions about our products?
We are always happy to take your call at +49 (571) 887-44222.

Environmental Product Compliance

Compliance Search

Environmental Product Compliance 788-356	URL	Download
Relay module; Nominal input voltage: 24 VDC; 1 make contact; Limiting continuous current: 16 A; for lamp loads; Red status indicator; Module width: 15 mm		

Installation Notes

Conductor termination

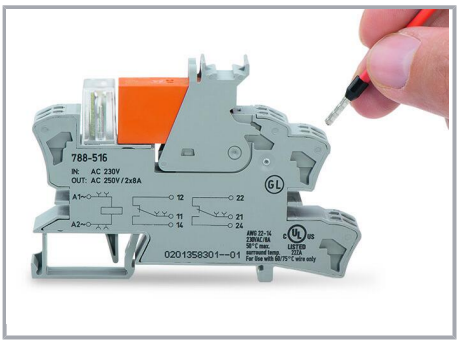

Conductor termination

Commoning

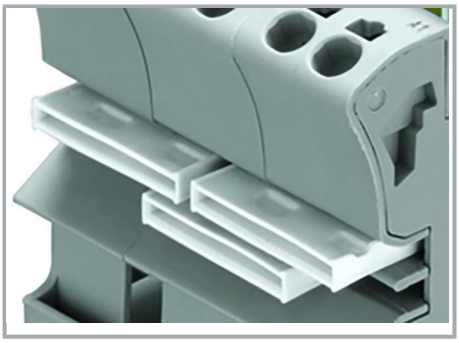

Easy commoning using adjacent jumpers

Marking

WAGO Kontakttechnik GmbH & Co. KG
Hansastr. 27
32423 Minden
Phone: +49571 887-0 | Fax: +49571 887-169
Email: info.de@wago.com | Web: www.wago.com

Do you have any questions about our products?
We are always happy to take your call at +49 (571) 887-44222.

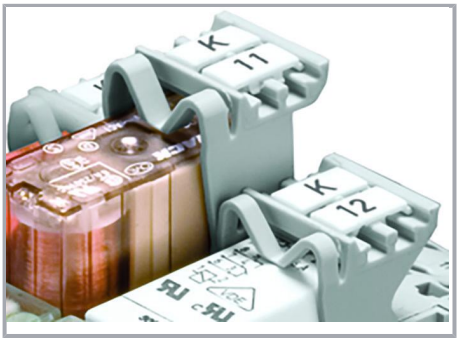

Marking using WMB Multi markers and group marker carriers.

Subject to changes. Please also observe the further product documentation!

WAGO Kontakttechnik GmbH & Co. KG
Hansastr. 27
32423 Minden
Phone: +49571 887-0 | Fax: +49571 887-169
Email: info.de@wago.com | Web: www.wago.com

Do you have any questions about our products?
We are always happy to take your call at +49 (571) 887-44222.