Data sheet | Item number: 788-100

Relay socket; 1 changeover contact; for 15 mm basic relays; gray

www.wago.com/788-100

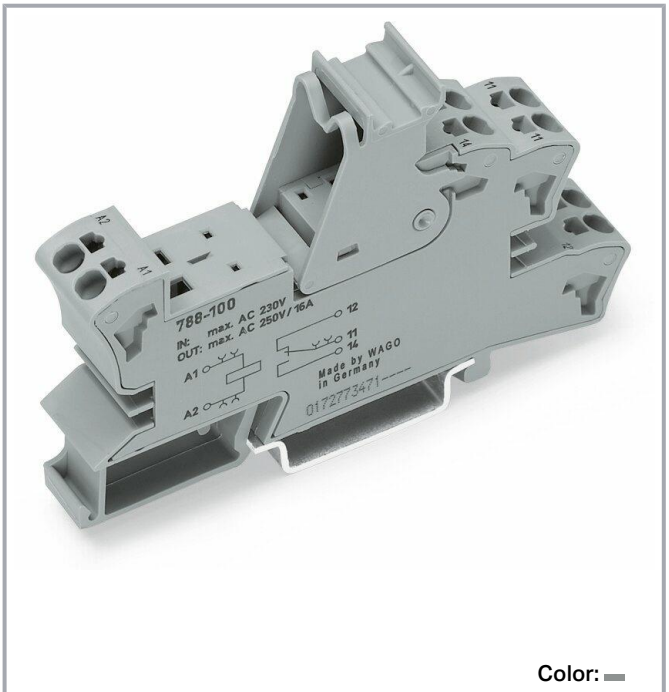

Color:

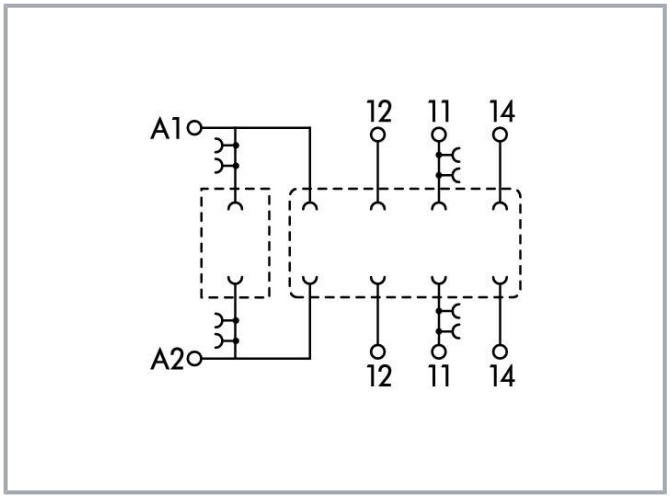

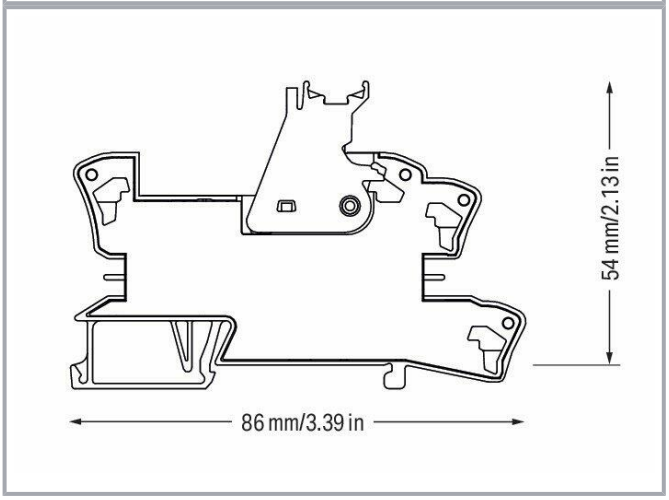

Data

Notes

Note	Bei den angegebenen technischen Daten handelt es sich um

Subject to changes. Please also observe the further product documentation!

WAGO Kontakttechnik GmbH & Co. KG
Hansastr. 27
32423 Minden
Phone: +49571 887-0 | Fax: +49571 887-169
Email: info.de@wago.com | Web: www.wago.com

Do you have any questions about our products?
We are always happy to take your call at +49 (571) 887-44222.

	Maximalwerte. Diese können durch das verwendete Zubehör eingeschränkt werden.

Technical data

Control circuit

Nominal input voltage U_N	AC/DC 230 V
Input voltage range	AC/DC 0 … 250 V
Nominal input current at U_N	0

Load circuit

Number of changeover/switchover contacts	1
Limiting continuous current	16 A
Switching voltage (max.)	AC 300 V

Safety and protection

Rated voltage	300 V
Overvoltage category	II
Pollution degree	3
Dielectric strength, control/load circuit (AC, 1 min)	6 kVrms
Dielectric strength, open contact (AC, 1 min)	1 kVrms
Dielectric strength, channel/channel (AC, 1 min.)	(depending on relay))
Insulation type (control/load circuit)	Reinforced insulation (safe isolation)
Insulation type (between adjacent devices of the the same type)	Basic insulation
Protection type	IP20

Connection data

Connection technology	Push-in CAGE CLAMP®
Solid conductor	0.34 … 2.5 mm² / 22 … 14 AWG
Fine-stranded conductor	0.34 … 2.5 mm² / 22 … 14 AWG
Strip length	9 … 10 mm / 0.35 … 0.39 inch

Physical data

Width	15 mm / 0.591 inch
Height	86 mm / 3.386 inch

Subject to changes. Please also observe the further product documentation!

WAGO Kontakttechnik GmbH & Co. KG
Hansastr. 27
32423 Minden
Phone: +49571 887-0 | Fax: +49571 887-169
Email: info.de@wago.com | Web: www.wago.com

Do you have any questions about our products?
We are always happy to take your call at +49 (571) 887-44222.

Depth from upper edge of DIN-rail	54 mm / 2.126 inch

Mechanical data

Mounting type	DIN-35 rail

Material data

Color	gray
Weight	31.2 g

Environmental requirements

Surrounding air temperature (operation at U_N)	-40 … 70 °C
Surrounding air temperature (storage)	-40 … 80 °C
Processing temperature	-25 … +50 °C
Relative humidity	5 … 95 % (no condensation permissible)
Operating altitude (max.)	2000 m

Standards and specifications

Standards/Specifications	EN 61010-2-201

Commercial data

Product Group	6 (Interface Electronics)
PU (SPU)	20 (1) Each
Packaging type	box
Country of origin	CN
GTIN	4050821591764
Customs tariff number	85366990990

Optional accessories

Ferrule

Ferrule

Item no.: 216-241
Ferrule; Sleeve for 0.5 mm² / 20 AWG; insulated; electro-tin plated; electrolytic copper; gastight crimped; acc. to DIN 46228, Part 4/09.90; white
www.wago.com/216-241

Item no.: 216-242
Ferrule; Sleeve for 0.75 mm² / 18 AWG; insulated; electro-tin plated; electrolytic copper; gastight crimped; acc. to DIN 46228, Part 4/09.90; gray
www.wago.com/216-242

Item no.: 216-243

Subject to changes. Please also observe the further product documentation!

WAGO Kontakttechnik GmbH & Co. KG
Hansastr. 27
32423 Minden
Phone: +49571 887-0 | Fax: +49571 887-169
Email: info.de@wago.com | Web: www.wago.com

Do you have any questions about our products?
We are always happy to take your call at +49 (571) 887-44222.

	Ferrule; Sleeve for 1 mm² / AWG 18; insulated; electro-tin plated; electrolytic copper; gastight crimped; acc. to DIN 46228, Part 4/09.90; red	www.wago.com/216-243
	Item no.: 216-244 Ferrule; Sleeve for 1.5 mm² / AWG 16; insulated; electro-tin plated; electrolytic copper; gastight crimped; acc. to DIN 46228, Part 4/09.90; black	www.wago.com/216-244
	Item no.: 216-542 Twin ferrule; Sleeve for 2 x 1 mm² / AWG 2 x 18; red, insulated; 12 mm long; red	www.wago.com/216-542

Jumpers

Jumper

	Item no.: 788-116 Jumper; for jumper slot; 6-way; insulated	www.wago.com/788-116
	Item no.: 788-117 Jumper; for jumper slot; 8-way; insulated	www.wago.com/788-117
	Item no.: 788-114 Jumper; for jumper slot; 3-way; insulated	www.wago.com/788-114
	Item no.: 788-113 Jumper; for jumper slot; 2-way; insulated	www.wago.com/788-113
	Item no.: 788-115 Jumper; for jumper slot; 4-way; insulated	www.wago.com/788-115
	Item no.: 859-402 Jumper; for jumper slot; 2-way; insulated; light gray	www.wago.com/859-402
	Item no.: 788-118 Jumper; for jumper slot; from 1 to 3; insulated	www.wago.com/788-118

Tool

Operating tool

	Item no.: 210-720 Operating tool; Blade: 3.5 x 0.5 mm; with a partially insulated shaft; multicoloured	www.wago.com/210-720

Indicators

Operation status indicator

	Item no.: 788-120 Accessories for relay modules; Operation status indicator: red; Nominal operating voltage: 24 VDC	www.wago.com/788-120
	Item no.: 788-122 Operation status indicator; 110 VDC	www.wago.com/788-122
	Item no.: 788-123 Accessories for relay modules; Operation status indicator: red; Nominal operating voltage: 24 VAC	www.wago.com/788-123

Subject to changes. Please also observe the further product documentation!

WAGO Kontakttechnik GmbH & Co. KG
Hansastr. 27
32423 Minden
Phone: +49571 887-0 | Fax: +49571 887-169
Email: info.de@wago.com | Web: www.wago.com

Do you have any questions about our products?
We are always happy to take your call at +49 (571) 887-44222.

	Item no.: 788-124 Accessories for relay modules; Operation status indicator: red	www.wago.com/788-124
	Item no.: 788-121 Accessories for relay modules; Operation status indicator: red; Nominal operating voltage range: 48 … 60 VDC	www.wago.com/788-121
	Item no.: 788-125 Accessories for relay modules; Operation status indicator: red	www.wago.com/788-125

Marking accessories

Marking strip

	**Item no.: 2009-110** Marking strips; for Smart Printer; on reel; not stretchable; plain; snap-on type; white	www.wago.com/2009-110

Marking device

	**Item no.: 210-110** Fiber-tip pen	www.wago.com/210-110

Double marker carrier

	**Item no.: 209-128** Adaptor; gray	www.wago.com/209-128

Protective marker cover

	Item no.: 209-184 Protection cover; transparent	www.wago.com/209-184

Marker

	**Item no.: 2009-115** WMB-Inline; for Smart Printer; 1500 pieces on roll; stretchable 5 - 5.2 mm; plain; snap-on type; white	www.wago.com/2009-115
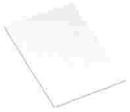	**Item no.: 209-183** Marker card; white	www.wago.com/209-183
	Item no.: 793-501 WMB marking card; as card; not stretchable; plain; snap-on type; white	www.wago.com/793-501
	**Item no.: 793-502** WMB marking card; as card; MARKED; 1 … 10 (10x); not stretchable; Horizontal marking; snap-on type; white	www.wago.com/793-502
	Item no.: 793-503 WMB marking card; as card; MARKED; 11 … 20 (10x); not stretchable; Horizontal marking; snap-on type; white	www.wago.com/793-503
	Item no.: 793-504 WMB marking card; as card; MARKED; 21 … 30 (10x); not stretchable; Horizontal marking; snap-on type; white	www.wago.com/793-504
	Item no.: 793-505	

Subject to changes. Please also observe the further product documentation!

WAGO Kontakttechnik GmbH & Co. KG
Hansastr. 27
32423 Minden
Phone: +49571 887-0 | Fax: +49571 887-169
Email: info.de@wago.com | Web: www.wago.com

Do you have any questions about our products?
We are always happy to take your call at +49 (571) 887-44222.

	WMB marking card; as card; MARKED; 31 ... 40 (10x); not stretchable; Horizontal marking; snap-on type; white	www.wago.com/793-505

Group marker carrier

	**Item no.: 209-145** Group marker carrier; white	www.wago.com/209-145
	**Item no.: 249-105** Group marker carrier; gray	www.wago.com/249-105

Downloads

Documentation

Bid Text

788-100 docx - Datei	2019. 2. 20.	docx 16.3 kB	Download
788-100 X81 - Datei	2019. 2. 19.	xml 3.7 kB	Download

Instruction Leaflet

Sockets with Elementary Relay/ SSR	V 1.0.1 2020. 10. 9.	pdf 2.3 MB	Download

Additional Information

Disposal; Electrical and electronic equipment, Packaging	V 1.0.0	pdf 265.8 kB	Download

CAD/CAE-Data

CAE data

ZUKEN Portal 788-100	URL	Download
EPLAN Data Portal 788-100	URL	Download
WSCAD Universe 788-100	URL	Download

CAD data

Subject to changes. Please also observe the further product documentation!

WAGO Kontakttechnik GmbH & Co. KG
Hansastr. 27
32423 Minden
Phone: +49571 887-0 | Fax: +49571 887-169
Email: info.de@wago.com | Web: www.wago.com

Do you have any questions about our products?
We are always happy to take your call at +49 (571) 887-44222.

2D/3D Models 788-100	URL	Download

Environmental Product Compliance

Compliance Search

Environmental Product Compliance 788-100 Relay socket; 1 changeover contact; for 15 mm basic relays; gray	URL	Download

Installation Notes

WAGO Kontakttechnik GmbH & Co. KG
Hansastr. 27
32423 Minden
Phone: +49571 887-0 | Fax: +49571 887-169
Email: info.de@wago.com | Web: www.wago.com

Do you have any questions about our products?
We are always happy to take your call at +49 (571) 887-44222.