This document was generated on 05/21/2010

PLEASE CHECK WWW.MOLEX.COM FOR LATEST PART INFORMATION

Part Number: 0783200001
Status: Active
Overview: micro_sata
Description: 1.27mm (.050") Pitch High Speed Micro Serial ATA Device Receptacle for 1.8" HDD/ SSD, SMT, Right Angle, Top Mount, 16 Circuits, Tray, Lead free

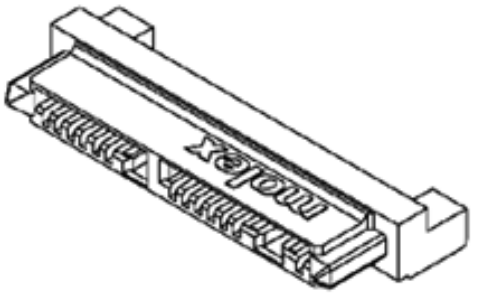

Series image - Reference only

Documents:

3D Model
Drawing (PDF)
Product Specification PS-78320-002 (PDF)
RoHS Certificate of Compliance (PDF)

Agency Certification

CSA	LR19980
UL	E29179

General

Product Family	PCB Receptacles
Series	78320
Application	Board-to-Board
Overview	micro_sata
Product Name	Micro Serial ATA, Serial ATA

Physical

Circuits (Loaded)	16
Circuits (maximum)	16
Circuits Detail	With optional manufacturing pins (S1 to S7 and P1 to P9)
Color - Resin	Black
Durability (mating cycles max)	500
Flammability	94V-0
Glow-Wire Compliant	No
Guide to Mating Part	Yes
Keying to Mating Part	Yes
Lock to Mating Part	Yes
Material - Metal	Copper Alloy
Material - Plating Mating	Gold
Material - Plating Termination	Tin
Material - Resin	Nylon
Number of Rows	1
Orientation	Right Angle
PCB Locator	Yes
PCB Retention	Yes
Packaging Type	Tray
Pitch - Mating Interface (in)	0.050 In, 0.200 In
Pitch - Mating Interface (mm)	1.27 mm, 5.08 mm
Pitch - Term. Interface (in)	0.050 In, 0.200 In
Pitch - Term. Interface (mm)	1.27 mm, 5.08 mm
Plating min: Mating (µin)	30
Plating min: Mating (µm)	0.76
Plating min: Termination (µin)	100
Plating min: Termination (µm)	2.54
Polarized to Mating Part	Yes
Polarized to PCB	Yes
Stackable	No
Temperature Range - Operating	-40°C to +105°C
Termination Interface: Style	Surface Mount

EU RoHS
ELV and RoHS Compliant
REACH SVHC
Contains SVHC: No
Halogen-Free Status
Not Halogen-Free

China RoHS

Need more information on product environmental compliance?

Email productcompliance@molex.com
For a multiple part number RoHS Certificate of Compliance, click here

Please visit the Contact Us section for any non-product compliance questions.

Search Parts in this Series
78320Series

Mates With
78103 , 78283 and 78285 Micro SATA Device Plugs

Electrical

Current - Maximum per Contact	1.5A
Grounding to PCB	Yes
Voltage - Maximum	30V

Solder Process Data

Duration at Max. Process Temperature (seconds)	10
Lead-free Process Capability	Reflow Capable (SMT only)
Max. Cycles at Max. Process Temperature	1
Process Temperature max. C	260

Material Info

Reference - Drawing Numbers

Packaging Specification	PK-78320-001
Product Specification	PS-78320-002
Sales Drawing	SD-78320-001

This document was generated on 05/21/2010

PLEASE CHECK WWW.MOLEX.COM FOR LATEST PART INFORMATION

PART NUMBER	TOTAL PINS	DESCRIPTION
78320-0001	16	WITH OPTIONAL MANUFACTURING PINS (S1 TO S7 & P1 TO P9)
78320-1001	14	WITHOUT OPTIONAL MANUFACTURING PINS (S1 TO S7 & P1 TO P7)

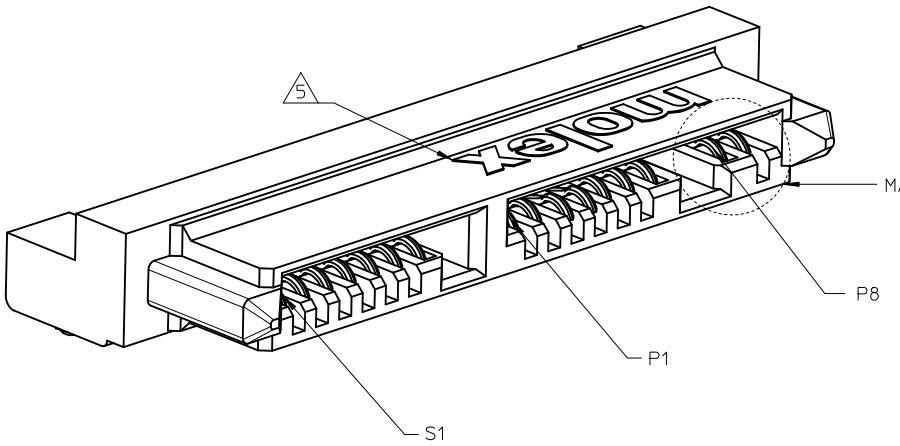

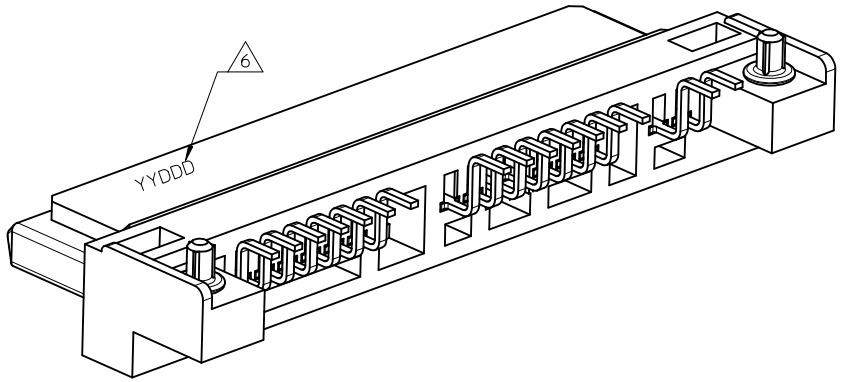

NOTES:
1. MATERIAL : NYLON (PA), GLASS FILLED, UL 94V-0, BLACK
   TERMINAL/LOCATING PIN : COPPER ALLOY
2. FINISHES :
   TERMINAL : 0.76μm MIN. SELECTIVE GOLD OVER
   1.27μm MIN. NICKEL UNDERPLATE
   : 2.54μm MIN. TIN OVER
   1.27μm MIN. NICKEL UNDERPLATE
   LOCATING PIN : 3.81μm MIN. TIN OVER
   2.00μm MIN. NICKEL UNDERPLATE
3. PRODUCT SPECIFICATION: PS-78320-002
4. PACKAGING : TRAY
5. MOLEX LOGO LOCATED APPROXIMATELY AS SHOWN
6. DATE CODE LOCATED APPROXIMATELY AS SHOWN
7. THIS PRODUCT IS COMPLIANT TO RoHS DIRECTIVE WITH THE FOLLOWING BANNED SUBSTANCES - LEAD, MERCURY, CADMIUM, HEXAVALENT CHROMIUM, POLYBROMINATED BIPHENYLS AND POLYBROMINATED DIPHENYLS ETHERS.
8. NON FUNCTIONAL CORING MAY VARY.

UPDATE VIEWS
EC NO: S2010-0590
DRWN:GMENARLY 2010/01/13
CH'KD:CGOH 2010/01/25
APPR:BOKOK 2010/01/28
DESCRIPTION
REV

A3

QUALITY SYMBOLS
FA=0
FC=0
FP=0

GENERAL TOLERANCES (UNLESS SPECIFIED)

	mm	INCH
4 PLACES	± ---	± ---
3 PLACES	± ---	± ---
2 PLACES	± 0.20	± ---
1 PLACE	± ---	± ---
ANGULAR ± 3 °		

DRAFT WHERE APPLICABLE MUST REMAIN WITHIN DIMENSIONS

DIMENSION STYLE: MM ONLY
SCALE: NTS
DESIGN UNITS: METRIC
THIRD ANGLE PROJECTION

		DATE
DRAWN BY	GMENARLY	2007/08/23
CHECKED BY	YKOH	2007/10/04
APPROVED BY	BOKOK	2010/01/26

TITLE: SERIAL ATA RECEPTACLE 1.8 INCH HDD/SSD R/A, SMT, 3.80MM HEIGHT

MOLEX INCORPORATED

MATERIAL NO.: SEE TABLE
DOCUMENT NO.: SD-78320-001
SHEET NO.: 1 OF 5

SIZE A3

THIS DRAWING CONTAINS INFORMATION THAT IS PROPRIETARY TO MOLEX INCORPORATED AND SHOULD NOT BE USED WITHOUT WRITTEN PERMISSION

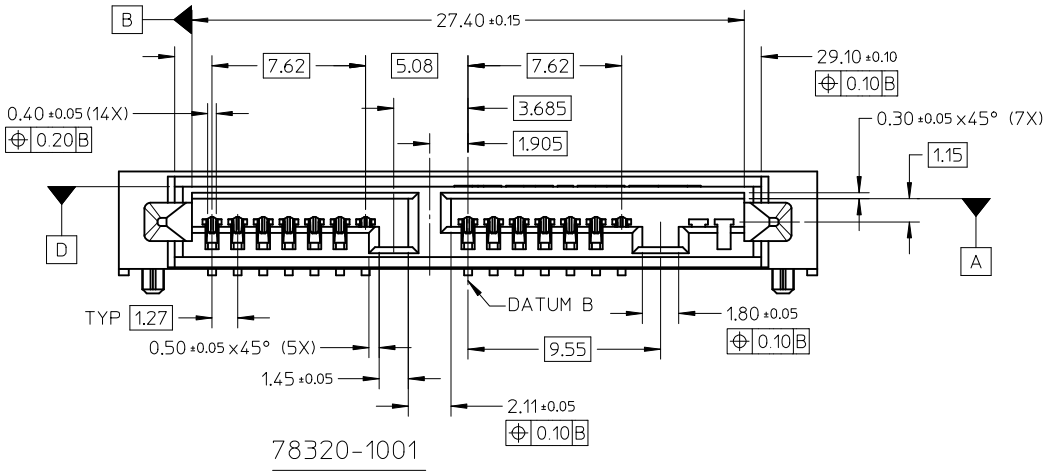

78320-1001

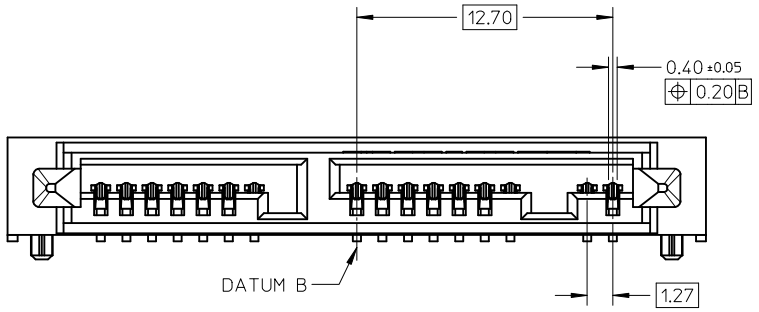

78320-0001

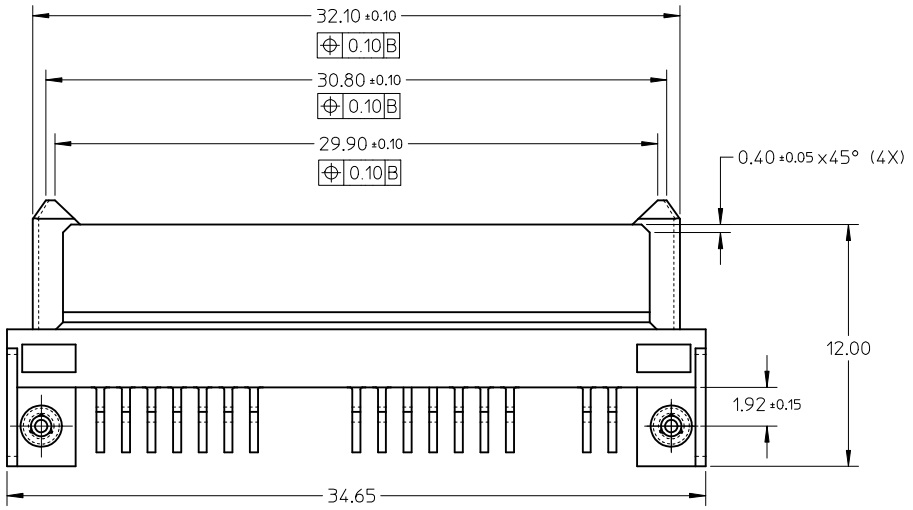

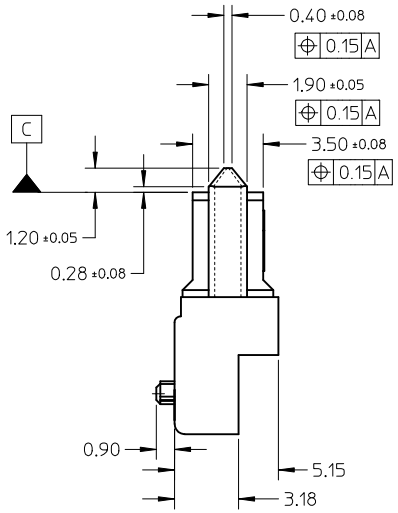

UPDATE VIEWS
EC NO: S2010-0590
DRWN:GMENARLY 2010/01/13
CH'KD:CGOH 2010/01/25
APPR:BOKOK 2010/01/28
DESCRIPTION
REV

A3

QUALITY SYMBOLS
FA=0
FC=0
FP=0

GENERAL TOLERANCES (UNLESS SPECIFIED)

	mm	INCH
4 PLACES	± ---	± ---
3 PLACES	± ---	± ---
2 PLACES	± 0.20	± ---
1 PLACE	± ---	± ---
ANGULAR ± 3 °		

DRAFT WHERE APPLICABLE MUST REMAIN WITHIN DIMENSIONS

DIMENSION STYLE: MM ONLY
SCALE: NTS
DESIGN UNITS: METRIC
THIRD ANGLE PROJECTION

DRAWN BY: GMENARLY DATE: 2007/08/23
CHECKED BY: YKOH DATE: 2007/10/04
APPROVED BY: BOKOK DATE: 2010/01/26

TITLE
SERIAL ATA RECEPTACLE
1.8 INCH HDD/SSD
R/A, SMT, 3.80MM HEIGHT

MOLEX INCORPORATED

MATERIAL NO.: SEE TABLE
DOCUMENT NO.: SD-78320-001
SHEET NO.: 2 OF 5

SIZE A3

THIS DRAWING CONTAINS INFORMATION THAT IS PROPRIETARY TO MOLEX INCORPORATED AND SHOULD NOT BE USED WITHOUT WRITTEN PERMISSION

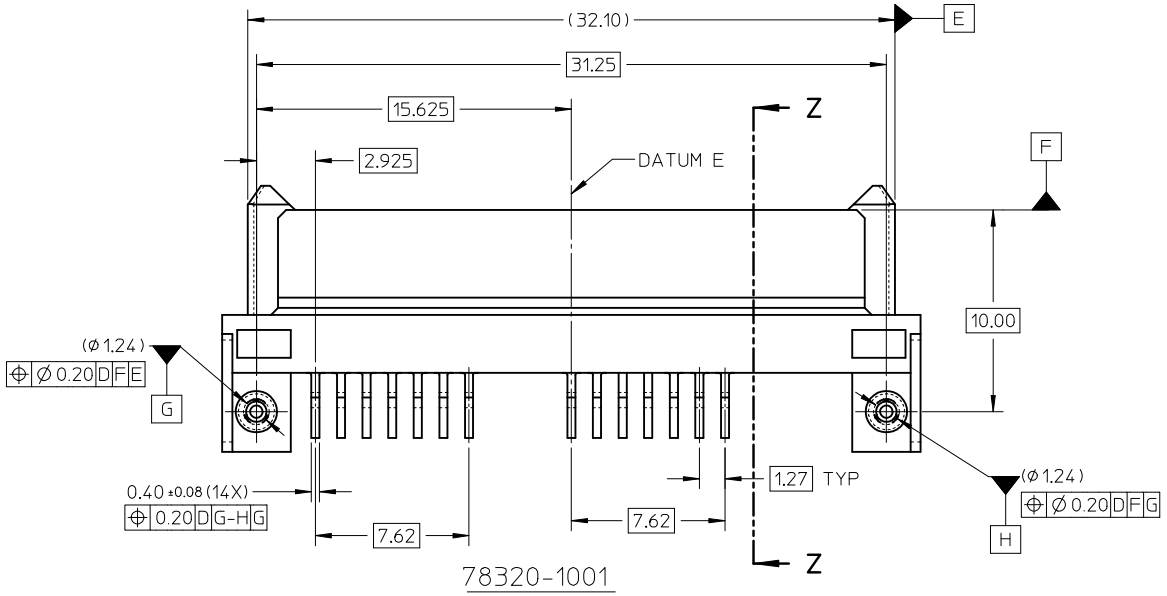

78320-1001

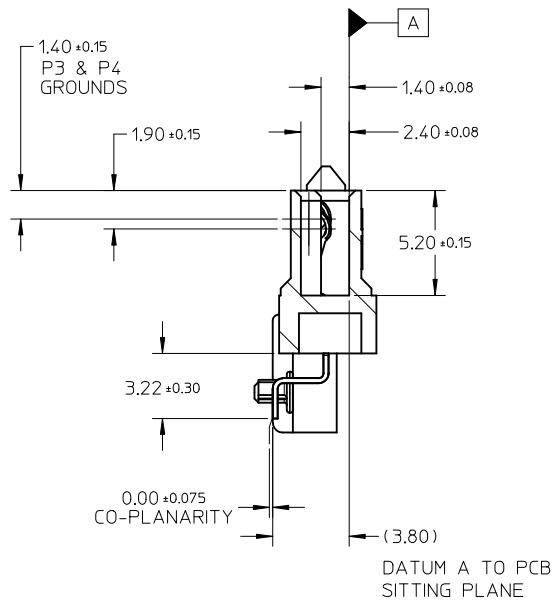

SECTION Z-Z

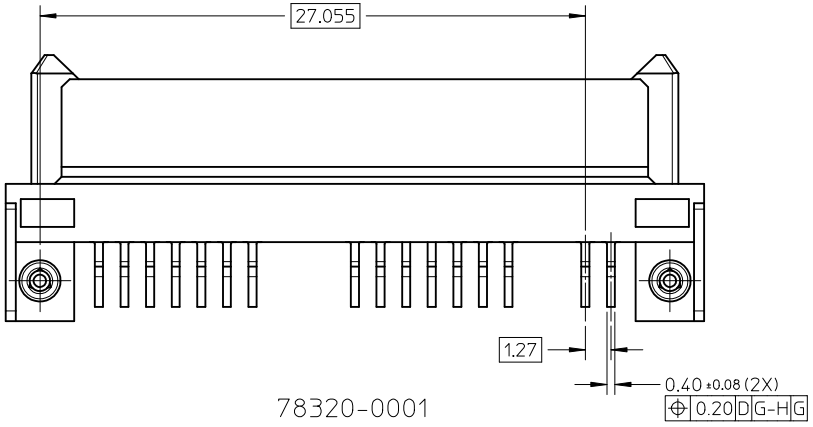

78320-0001

UPDATE VIEWS EC NO: S2010-0590 DRWN:GMENARLY 2010/01/13 CH'KD:CGOH 2010/01/25 APPR:BOKOK 2010/01/28 A3	REV	DESCRIPTION	QUALITY SYMBOLS F_A=0 F_C=0 F_P=0	GENERAL TOLERANCES (UNLESS SPECIFIED) mm / INCH 4 PLACES ± --- ± --- 3 PLACES ± --- ± --- 2 PLACES ± 0.20 ± --- 1 PLACE ± --- ± --- ANGULAR ± 3 ° DRAFT WHERE APPLICABLE MUST REMAIN WITHIN DIMENSIONS	DIMENSION STYLE MM ONLY DRAWN BY GMENARLY DATE 2007/08/23 CHECKED BY YKOH DATE 2007/10/04 APPROVED BY BOKOK DATE 2010/01/26 MATERIAL NO. SEE TABLE	SCALE NTS DESIGN UNITS METRIC THIRD ANGLE PROJECTION TITLE SERIAL ATA RECEPTACLE 1.8 INCH HDD/SSD R/A, SMT, 3.80MM HEIGHT molex MOLEX INCORPORATED DOCUMENT NO. SD-78320-001 SHEET NO. 3 OF 5	

SIZE A3

THIS DRAWING CONTAINS INFORMATION THAT IS PROPRIETARY TO MOLEX INCORPORATED AND SHOULD NOT BE USED WITHOUT WRITTEN PERMISSION

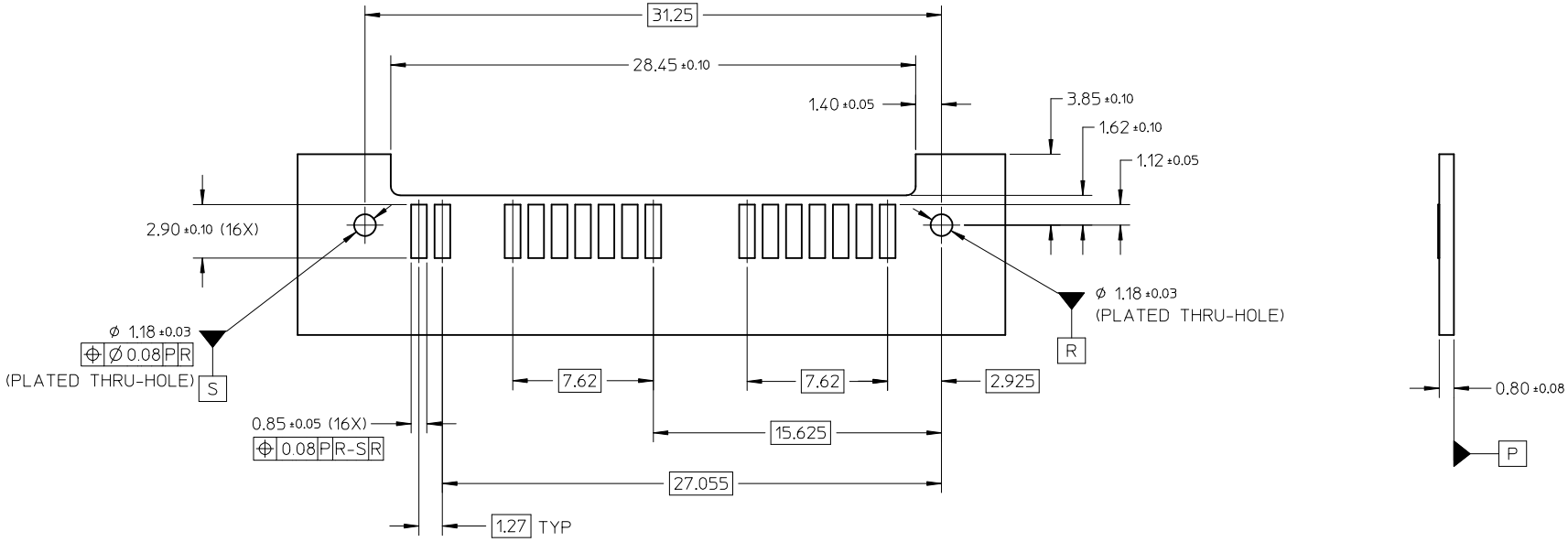

RECOMMENDED PCB LAYOUT

UPDATE VIEWS EC NO: S2010-0590 DRWN:GMENARLY 2010/01/13 CH'KD:CGOH 2010/01/25 APPR:BOKOK 2010/01/28 A3	REV / DESCRIPTION	QUALITY SYMBOLS F_A=0 F_C=0 F_P=0	GENERAL TOLERANCES (UNLESS SPECIFIED) mm / INCH 4 PLACES ± --- ± --- 3 PLACES ± --- ± --- 2 PLACES ± 0.20 ± --- 1 PLACE ± --- ± --- ANGULAR ± 3 ° DRAFT WHERE APPLICABLE MUST REMAIN WITHIN DIMENSIONS	DIMENSION STYLE MM ONLY DRAWN BY GMENARLY DATE 2007/08/23 CHECKED BY YKOH DATE 2007/10/04 APPROVED BY BOKOK DATE 2010/01/26 MATERIAL NO. SEE TABLE	SCALE NTS DESIGN UNITS METRIC THIRD ANGLE PROJECTION TITLE SERIAL ATA RECEPTACLE 1.8 INCH HDD/SSD R/A, SMT, 3.80MM HEIGHT molex MOLEX INCORPORATED DOCUMENT NO. SD-78320-001 SHEET NO. 4 OF 5	SIZE A3	THIS DRAWING CONTAINS INFORMATION THAT IS PROPRIETARY TO MOLEX INCORPORATED AND SHOULD NOT BE USED WITHOUT WRITTEN PERMISSION

tb_frame_A3_P_AM_T
Rev. F 2009/06/18

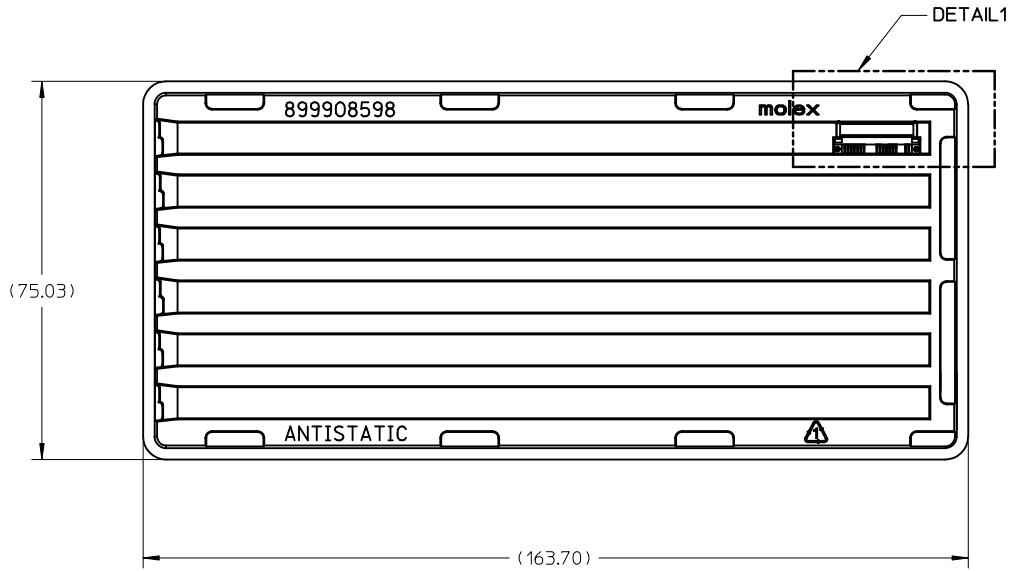

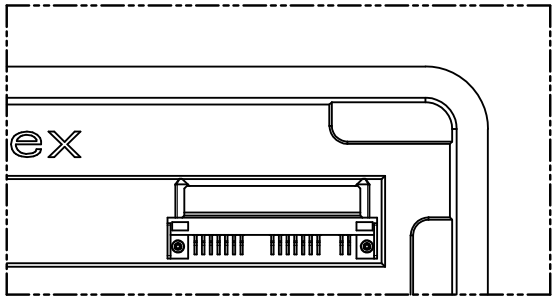

DETAIL 1

NOTES:
1. PACKAGING QTY: 54PCS/TRAY
2. MATERIAL: PVC-CLEAR, ANTISTATIC
   0.70MM THICK (PRE-FORMED)

UPDATE VIEWS
EC NO: S2010-0590 2010/01/13
DRWN:GMENARLY 2010/01/25
CH'KD:CGOH 2010/01/28
APPR:BOKOK
DESCRIPTION
REV

A3

QUALITY SYMBOLS
$\sqrt{F_A}$=0
$\sqrt{F_C}$=0
$\sqrt{F_F}$=0

GENERAL TOLERANCES (UNLESS SPECIFIED)	mm	INCH
4 PLACES	± ---	± ---
3 PLACES	± ---	± ---
2 PLACES	± 0.20	± ---
1 PLACE	± ---	± ---
ANGULAR ± 3 °		

DRAFT WHERE APPLICABLE MUST REMAIN WITHIN DIMENSIONS

DIMENSION STYLE: MM ONLY	SCALE: NTS	DESIGN UNITS: METRIC	THIRD ANGLE PROJECTION
DRAWN BY: GMENARLY	DATE: 2007/08/23		
CHECKED BY: YKOH	DATE: 2007/10/04		
APPROVED BY: BOKOK	DATE: 2010/01/26		
MATERIAL NO.: SEE TABLE			

TITLE: SERIAL ATA RECEPTACLE 1.8 INCH HDD/SSD R/A, SMT, 3.80MM HEIGHT

molex MOLEX INCORPORATED

DOCUMENT NO.: SD-78320-001

SHEET NO.: 5 OF 5

SIZE A3

THIS DRAWING CONTAINS INFORMATION THAT IS PROPRIETARY TO MOLEX INCORPORATED AND SHOULD NOT BE USED WITHOUT WRITTEN PERMISSION