molex
one company > a world of innovation

This document was generated on 06/07/2010

PLEASE CHECK WWW.MOLEX.COM FOR LATEST PART INFORMATION

Part Number: 0781271348
Status: Active
Overview: ffc_fpc_smt
Description: 0.50mm (.020") Pitch FFC/FPC Connector, SMT, Non ZIF, Vertical, Reverse, Gold Plating, 34 Circuits, Lead Free

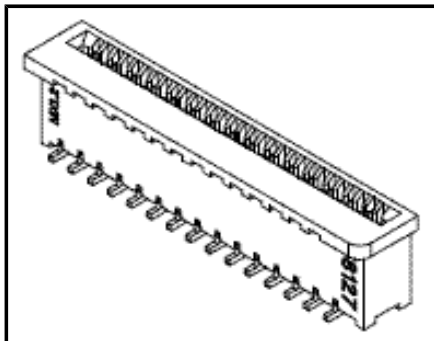

Series image - Reference only

Documents:

3D Model
Drawing (PDF)
Product Specification PS-78119-001 (PDF)
RoHS Certificate of Compliance (PDF)

Agency Certification

CSA	LR19980
UL	E29179

General

Product Family	FFC/FPC Connectors
Series	78127
Overview	ffc_fpc_smt
Product Name	N/A

Physical

Circuits (Loaded)	34
Circuits (maximum)	34
Color - Resin	Natural
Contact Position	N/A
Durability (mating cycles max)	20
Entry Angle	Vertical
Flammability	94V-0
Mated Height (in)	0.161 In
Mated Height (mm)	4.10 mm
Material - Metal	Copper Alloy
Material - Plating Mating	Gold, Nickel
Number of Rows	1
Orientation	Vertical
PCB Locator	No
PCB Retention	None
Packaging Type	Embossed Tape on Reel
Pitch - Mating Interface (in)	0.020 In
Pitch - Mating Interface (mm)	0.50 mm
Pitch - Term. Interface (in)	0.020 In
Pitch - Term. Interface (mm)	0.50 mm
Polarized to PCB	No
Stackable	No
Temperature Range - Operating	-40°C to +85°C
Termination Interface: Style	Surface Mount
Wire/Cable Type	FFC/FPC

Electrical

Current - Maximum per Contact	0.5A
Voltage - Maximum	50V AC

Material Info

Reference - Drawing Numbers

Product Specification	PS-78119-001
Sales Drawing	SD-78127-001

EU RoHS
ELV and RoHS Compliant
REACH SVHC
Contains SVHC: No
Halogen-Free Status
Not Reviewed

China RoHS

Need more information on product environmental compliance?

Email productcompliance@molex.com
For a multiple part number RoHS Certificate of Compliance, click here

Please visit the Contact Us section for any non-product compliance questions.

Search Parts in this Series
78127Series

Mates With
Standard FFC/FPC Cables

This document was generated on 06/07/2010

PLEASE CHECK WWW.MOLEX.COM FOR LATEST PART INFORMATION

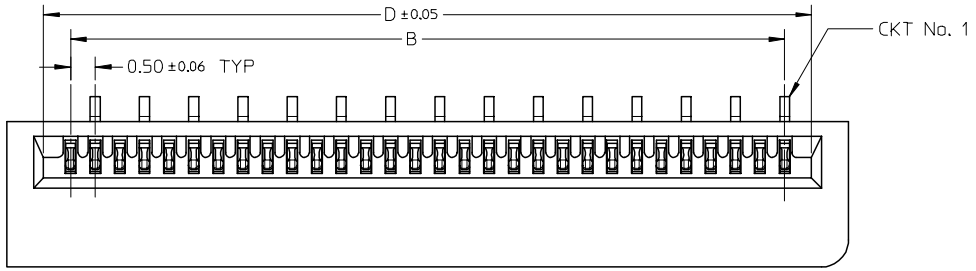

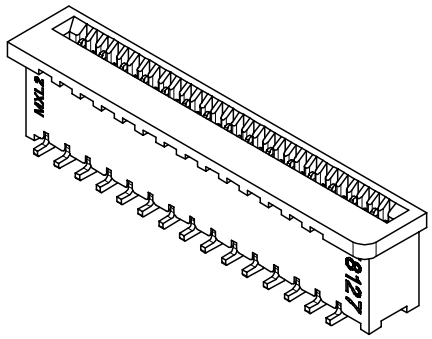

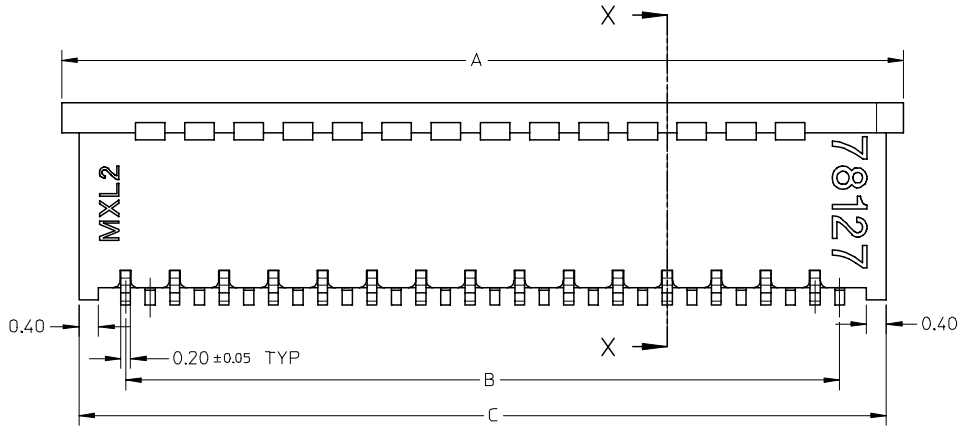

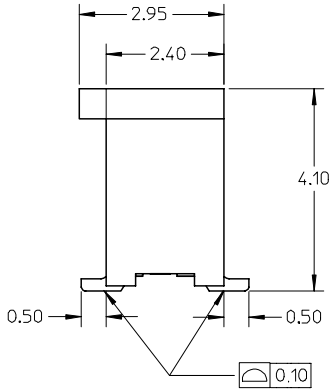

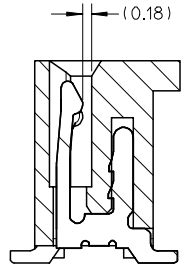

SECTION X-X

NOTE:
1. MATERIAL:
   HOUSING: PA46 GLASS FILLED, UL94V-0, COLOR: NATURAL
   TERMINAL: COPPER ALLOY
2. PLATING:
   1) 0.10 μm MIN. GOLD PLATING OVER NICKEL PLATING OVERALL
   2) 1-3 μm TIN-BISMUTH PLATING OVER NICKEL PLATING OVERALL
3. PRODUCT SPECIFICATION: PS-78119-001
4. PRODUCT ARE PACKED IN TAPE & REEL.

REVISED
EC NO: S2007-0721 2007/03/05
DRWN:BOKOK 2007/03/05
CHKD:GOH 2007/03/05
APPR:KLING
DESCRIPTION
REV
A1

QUALITY SYMBOLS
▼=0
▽=0

GENERAL TOLERANCES (UNLESS SPECIFIED)

	mm	INCH
4 PLACES	± ---	± ---
3 PLACES	± ---	± ---
2 PLACES	± 0.15	± ---
1 PLACE	± ---	± ---
ANGULAR ± 3 °		

DRAFT WHERE APPLICABLE MUST REMAIN WITHIN DIMENSIONS

DIMENSION STYLE: MM ONLY
SCALE: NTS
DESIGN UNITS: METRIC
THIRD ANGLE PROJECTION

		DATE
DRAWN BY	YLQIAO	2006/05/05
CHECKED BY	BOKOK	2006/06/06
APPROVED BY	PTLIM	2006/06/06

TITLE: 0.50MM PITCH, FPC CONN. NON-ZIF, SMT

MOLEX INCORPORATED

MATERIAL NO.: SEE TABLE
DOCUMENT NO.: SD-78127-001
SHEET NO.: 1 OF 7

SIZE A3

THIS DRAWING CONTAINS INFORMATION THAT IS PROPRIETARY TO MOLEX INCORPORATED AND SHOULD NOT BE USED WITHOUT WRITTEN PERMISSION

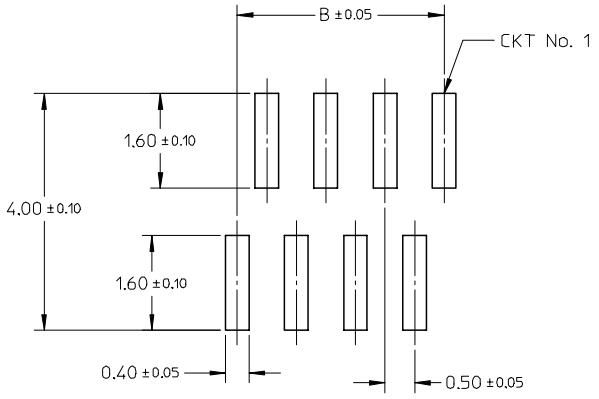

RECOMMENDED PCB LAYOUT

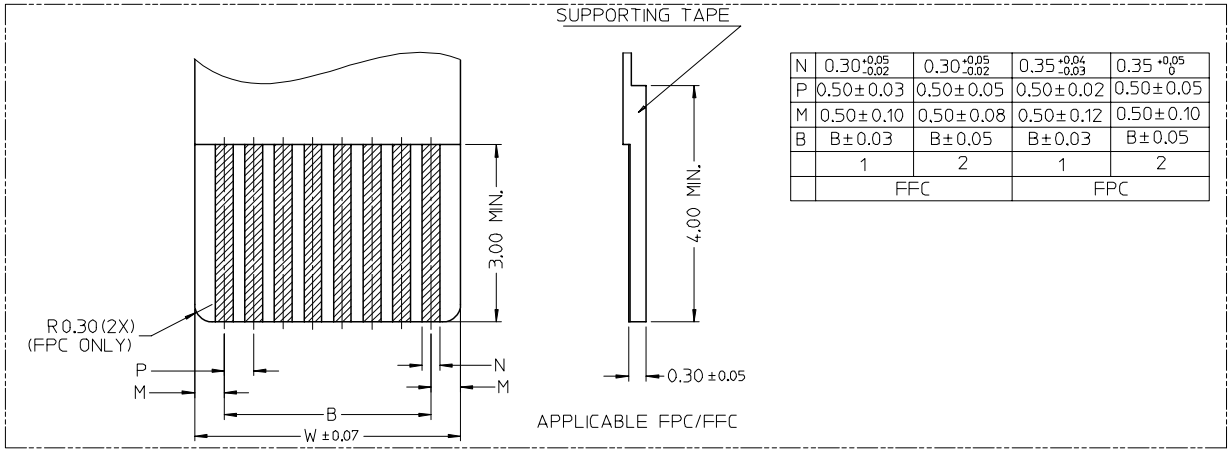

N	$0.30^{+0.05}_{-0.02}$	$0.30^{+0.05}_{-0.02}$	$0.35^{+0.04}_{-0.03}$	$0.35^{+0.05}_{0}$
P	0.50±0.03	0.50±0.05	0.50±0.02	0.50±0.05
M	0.50±0.10	0.50±0.08	0.50±0.12	0.50±0.10
B	B±0.03	B±0.05	B±0.03	B±0.05
	1	2	1	2
	FFC		FPC	

REVISED
EC NO: S2007-0721 2007/03/05
DRWN:BOKOK 2007/03/05
CHKD:CGOH 2007/03/05
APPR:KCLING 2007/03/05
DESCRIPTION
REV
A1

QUALITY SYMBOLS
▼=0
Ⓒ=0

GENERAL TOLERANCES (UNLESS SPECIFIED)

	mm	INCH
4 PLACES	± ---	± ---
3 PLACES	± ---	± ---
2 PLACES	± 0.15	± ---
1 PLACE	± ---	± ---
ANGULAR ± 3 °		

DRAFT WHERE APPLICABLE MUST REMAIN WITHIN DIMENSIONS

DIMENSION STYLE: MM ONLY
SCALE: NTS
DESIGN UNITS: METRIC
THIRD ANGLE PROJECTION

DRAWN BY: YLQIAO DATE: 2006/05/05
CHECKED BY: BOKOK DATE: 2006/06/06
APPROVED BY: PTLIM DATE: 2006/06/06

TITLE: 0.50MM PITCH, FPC CONN. NON-ZIF, SMT

MOLEX INCORPORATED

MATERIAL NO.: SEE TABLE
DOCUMENT NO.: SD-78127-001
SHEET NO.: 2 OF 7

SIZE: A3

THIS DRAWING CONTAINS INFORMATION THAT IS PROPRIETARY TO MOLEX INCORPORATED AND SHOULD NOT BE USED WITHOUT WRITTEN PERMISSION

GOLD PLATING TERMINAL ASSEMBLY PART NUMBERS

ASSY P/N W/O PACKAGING	CKT	DIM A	DIM B	DIM C	DIM D	PLATING TYPE
78127-0068	6	5.10	2.50	4.40	3.60	
78127-0078	7	5.60	3.00	4.90	4.10	
78127-0088	8	6.10	3.50	5.40	4.60	
78127-0098	9	6.60	4.00	5.90	5.10	
78127-0108	10	7.10	4.50	6.40	5.60	
78127-0118	11	7.60	5.00	6.90	6.10	
78127-0128	12	8.10	5.50	7.40	6.60	
78127-0138	13	8.60	6.00	7.90	7.10	
78127-0148	14	9.10	6.50	8.40	7.60	
78127-0158	15	9.60	7.00	8.90	8.10	
78127-0168	16	10.10	7.50	9.40	8.60	
78127-0178	17	10.60	8.00	9.90	9.10	
78127-0188	18	11.10	8.50	10.40	9.60	1
78127-0198	19	11.60	9.00	10.90	10.10	
78127-0208	20	12.10	9.50	11.40	10.60	
78127-0218	21	12.60	10.00	11.90	11.10	
78127-0228	22	13.10	10.50	12.40	11.60	
78127-0238	23	13.60	11.00	12.90	12.10	
78127-0248	24	14.10	11.50	13.40	12.60	
78127-0258	25	14.60	12.00	13.90	13.10	
78127-0268	26	15.10	12.50	14.40	13.60	
78127-0278	27	15.60	13.00	14.90	14.10	
78127-0288	28	16.10	13.50	15.40	14.60	
78127-0298	29	16.60	14.00	15.90	15.10	
78127-0308	30	17.10	14.50	16.40	15.60	

ASSY P/N W/O PACKAGING	CKT	DIM A	DIM B	DIM C	DIM D	PLATING TYPE
78127-0318	31	17.60	15.00	16.90	16.10	
78127-0328	32	18.10	15.50	17.40	16.60	
78127-0338	33	18.60	16.00	17.90	17.10	
78127-0348	34	19.10	16.50	18.40	17.60	
78127-0358	35	19.60	17.00	18.90	18.10	
78127-0368	36	20.10	17.50	19.40	18.60	1
78127-0378	37	20.60	18.00	19.90	19.10	
78127-0388	38	21.10	18.50	20.40	19.60	
78127-0398	39	21.60	19.00	20.90	20.10	
78127-0408	40	22.10	19.50	21.40	20.60	
78127-0418	41	22.60	20.00	21.90	21.10	
78127-0428	42	23.10	20.50	22.40	21.60	

REVISED
EC NO: S2007-0721 2007/03/05
DRWN:BOKOK 2007/03/05
CHKD:CGOH 2007/03/05
APPR:KCLING 2007/03/05
DESCRIPTION
REV
A1

QUALITY SYMBOLS
▼=0
▽C=0

GENERAL TOLERANCES (UNLESS SPECIFIED)

	mm	INCH
4 PLACES	± ---	± ---
3 PLACES	± ---	± ---
2 PLACES	± 0.15	± ---
1 PLACE	± ---	± ---

ANGULAR ± 3 °

DRAFT WHERE APPLICABLE MUST REMAIN WITHIN DIMENSIONS

DIMENSION STYLE: MM ONLY
SCALE: NTS
DESIGN UNITS: METRIC
THIRD ANGLE PROJECTION

DRAWN BY: YLQIAO DATE: 2006/05/05
CHECKED BY: BOKOK DATE: 2006/06/06
APPROVED BY: PTLIM DATE: 2006/06/06

TITLE: 0.50MM PITCH, FPC CONN. NON-ZIF, SMT

MOLEX INCORPORATED

MATERIAL NO.: SEE TABLE
DOCUMENT NO.: SD-78127-001
SHEET NO.: 3 OF 7

SIZE A3

THIS DRAWING CONTAINS INFORMATION THAT IS PROPRIETARY TO MOLEX INCORPORATED AND SHOULD NOT BE USED WITHOUT WRITTEN PERMISSION

TIN-BISMUTH PLATING TERMINAL ASSEMBLY PART NUMBERS

ASSY P/N W/O PACKAGING	CKT	DIM A	DIM B	DIM C	DIM D	PLATING TYPE
78127-0069	6	5.10	2.50	4.40	3.60	
78127-0079	7	5.60	3.00	4.90	4.10	
78127-0089	8	6.10	3.50	5.40	4.60	
78127-0099	9	6.60	4.00	5.90	5.10	
78127-0109	10	7.10	4.50	6.40	5.60	
78127-0119	11	7.60	5.00	6.90	6.10	
78127-0129	12	8.10	5.50	7.40	6.60	
78127-0139	13	8.60	6.00	7.90	7.10	
78127-0149	14	9.10	6.50	8.40	7.60	
78127-0159	15	9.60	7.00	8.90	8.10	
78127-0169	16	10.10	7.50	9.40	8.60	
78127-0179	17	10.60	8.00	9.90	9.10	
78127-0189	18	11.10	8.50	10.40	9.60	2
78127-0199	19	11.60	9.00	10.90	10.10	
78127-0209	20	12.10	9.50	11.40	10.60	
78127-0219	21	12.60	10.00	11.90	11.10	
78127-0229	22	13.10	10.50	12.40	11.60	
78127-0239	23	13.60	11.00	12.90	12.10	
78127-0249	24	14.10	11.50	13.40	12.60	
78127-0259	25	14.60	12.00	13.90	13.10	
78127-0269	26	15.10	12.50	14.40	13.60	
78127-0279	27	15.60	13.00	14.90	14.10	
78127-0289	28	16.10	13.50	15.40	14.60	
78127-0299	29	16.60	14.00	15.90	15.10	
78127-0309	30	17.10	14.50	16.40	15.60	

ASSY P/N W/O PACKAGING	CKT	DIM A	DIM B	DIM C	DIM D	PLATING TYPE
78127-0319	31	17.60	15.00	16.90	16.10	
78127-0329	32	18.10	15.50	17.40	16.60	
78127-0339	33	18.60	16.00	17.90	17.10	
78127-0349	34	19.10	16.50	18.40	17.60	
78127-0359	35	19.60	17.00	18.90	18.10	
78127-0369	36	20.10	17.50	19.40	18.60	2
78127-0379	37	20.60	18.00	19.90	19.10	
78127-0389	38	21.10	18.50	20.40	19.60	
78127-0399	39	21.60	19.00	20.90	20.10	
78127-0409	40	22.10	19.50	21.40	20.60	
78127-0419	41	22.60	20.00	21.90	21.10	
78127-0429	42	23.10	20.50	22.40	21.60	

REVISED
EC NO: S2007-0721 2007/03/05
DRWN:BOKOK 2007/03/05
CHKD:GOH 2007/03/05
APPR:KLING 2007/03/05
DESCRIPTION
REV

A1

QUALITY SYMBOLS
▼=0
▽C=0

GENERAL TOLERANCES (UNLESS SPECIFIED)

	mm	INCH
4 PLACES	± ---	± ---
3 PLACES	± ---	± ---
2 PLACES	± 0.15	± ---
1 PLACE	± ---	± ---

ANGULAR ± 3 °

DRAFT WHERE APPLICABLE MUST REMAIN WITHIN DIMENSIONS

DIMENSION STYLE: MM ONLY
SCALE: NTS
DESIGN UNITS: METRIC
THIRD ANGLE PROJECTION

DRAWN BY: YLQIAO DATE: 2006/05/05
CHECKED BY: BOKOK DATE: 2006/06/06
APPROVED BY: PTLIM DATE: 2006/06/06

TITLE: 0.50MM PITCH, FPC CONN. NON-ZIF, SMT

molex MOLEX INCORPORATED

MATERIAL NO.: SEE TABLE
DOCUMENT NO.: SD-78127-001
SHEET NO.: 4 OF 7

SIZE: A3

THIS DRAWING CONTAINS INFORMATION THAT IS PROPRIETARY TO MOLEX INCORPORATED AND SHOULD NOT BE USED WITHOUT WRITTEN PERMISSION

EMBOSSED TYPE A

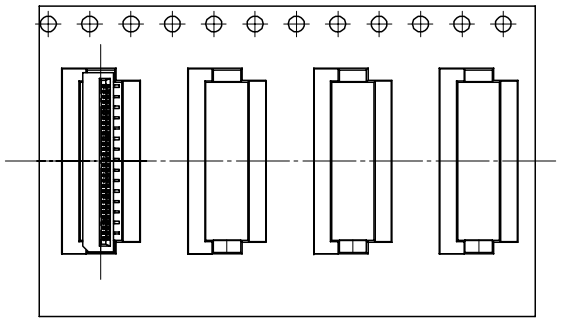

CUSTOMER
PULL OUT DIRECTION

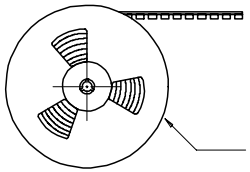

EMBOSSED TYPE B

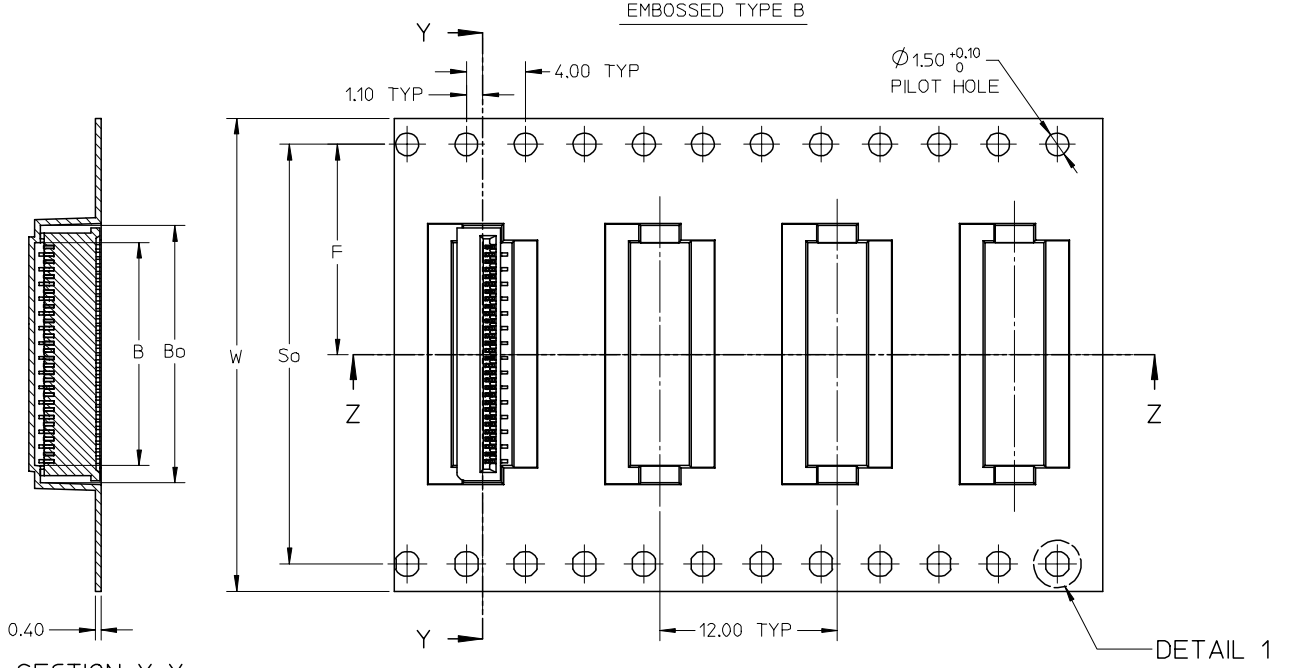

SECTION Y-Y

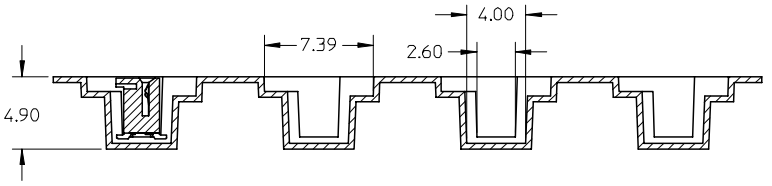

SECTION Z-Z

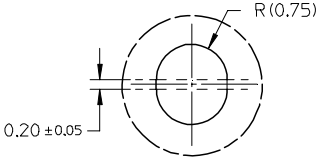

DETAIL 1

NOTES:

1. LEADER AND TRAILER TAPE

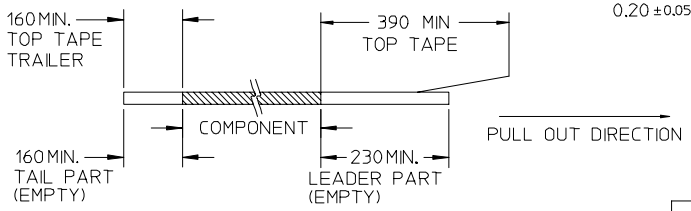

2. PEELING OFF FORCE OF THE TOP TAPE: 20-80gf.
   (PEELING DIRECTION AS SHOWN IN FOLLOWING FIGURE)

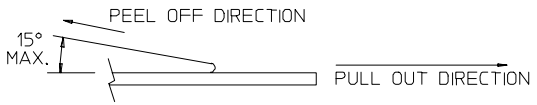

3. PACKAGING STANDARD IS AS PER EIA-481.
4. TAPE & REEL QUANTITY = 1000 PCS/REEL

REVISED
EC NO: S2007-0721 2007/03/05
DRWN:BOKOK 2007/03/05
CHKD:GOH 2007/03/05
APPR:KLING
DESCRIPTION
REV
A1

QUALITY SYMBOLS
▼=0
Ⓒ=0

GENERAL TOLERANCES (UNLESS SPECIFIED)

	mm	INCH
4 PLACES	± ---	± ---
3 PLACES	± ---	± ---
2 PLACES	± 0.15	± ---
1 PLACE	± ---	± ---
ANGULAR ± 3 °		

DRAFT WHERE APPLICABLE MUST REMAIN WITHIN DIMENSIONS

DIMENSION STYLE	MM ONLY
SCALE	NTS
DESIGN UNITS	METRIC
	THIRD ANGLE PROJECTION
DRAWN BY	YLQIAO
DATE	2006/05/05
CHECKED BY	BOKOK
DATE	2006/06/06
APPROVED BY	PTLIM
DATE	2006/06/06
MATERIAL NO.	SEE TABLE
SIZE	A3

TITLE: 0.50MM PITCH, FPC CONN. NON-ZIF, SMT

MOLEX INCORPORATED

DOCUMENT NO. SD-78127-001

SHEET NO. 5 OF 7

THIS DRAWING CONTAINS INFORMATION THAT IS PROPRIETARY TO MOLEX INCORPORATED AND SHOULD NOT BE USED WITHOUT WRITTEN PERMISSION

GOLD PLATING TERMINAL ASSEMBLY PART NUMBERS

ASSY P/N PACKED IN T&R	ASSY P/N W/O PACKAGING	CKT	W	So	F	Bo	B	EMBOSSED TYPE
78127-1068	78127-0068	6	24.00	-	11.50	5.40	3.10	A
78127-1078	78127-0078	7	24.00	-	11.50	5.90	3.60	
78127-1088	78127-0088	8	24.00	-	11.50	6.40	4.10	
78127-1098	78127-0098	9	24.00	-	11.50	6.90	4.60	
78127-1108	78127-0108	10	24.00	-	11.50	7.40	5.10	
78127-1118	78127-0118	11	24.00	-	11.50	7.90	5.60	
78127-1128	78127-0128	12	24.00	-	11.50	8.40	6.10	
78127-1138	78127-0138	13	24.00	-	11.50	8.90	6.60	
78127-1148	78127-0148	14	24.00	-	11.50	9.40	7.10	
78127-1158	78127-0158	15	24.00	-	11.50	9.90	7.60	
78127-1168	78127-0168	16	24.00	-	11.50	10.40	8.10	
78127-1178	78127-0178	17	24.00	-	11.50	10.90	8.60	
78127-1188	78127-0188	18	24.00	-	11.50	11.40	9.10	
78127-1198	78127-0198	19	24.00	-	11.50	11.90	9.60	
78127-1208	78127-0208	20	24.00	-	11.50	12.40	10.10	
78127-1218	78127-0218	21	32.00	28.40	14.20	12.90	10.60	B
78127-1228	78127-0228	22	32.00	28.40	14.20	13.40	11.10	
78127-1238	78127-0238	23	32.00	28.40	14.20	13.90	11.60	
78127-1248	78127-0248	24	32.00	28.40	14.20	14.40	12.10	
78127-1258	78127-0258	25	32.00	28.40	14.20	14.90	12.60	
78127-1268	78127-0268	26	32.00	28.40	14.20	15.40	13.10	
78127-1278	78127-0278	27	32.00	28.40	14.20	15.90	13.60	
78127-1288	78127-0288	28	32.00	28.40	14.20	16.40	14.10	
78127-1298	78127-0298	29	32.00	28.40	14.20	16.90	14.60	
78127-1308	78127-0308	30	32.00	28.40	14.20	17.40	15.10	

ASSY P/N PACKED IN T&R	ASSY P/N W/O PACKAGING	CKT	W	So	F	Bo	B	EMBOSSED TYPE
78127-1318	78127-0318	31	32.00	28.40	14.20	17.90	15.60	B
78127-1328	78127-0328	32	32.00	28.40	14.20	18.40	16.10	
78127-1338	78127-0338	33	32.00	28.40	14.20	18.90	16.60	
78127-348	78127-0348	34	32.00	28.40	14.20	19.40	17.10	
78127-1358	78127-0358	35	32.00	28.40	14.20	19.90	17.60	
78127-1368	78127-0368	36	32.00	28.40	14.20	20.40	18.10	
78127-1378	78127-0378	37	32.00	28.40	14.20	20.90	18.60	
78127-1388	78127-0388	38	32.00	28.40	14.20	21.40	19.10	
78127-1398	78127-0398	39	44.00	40.40	20.20	21.90	19.60	
78127-1408	78127-0408	40	44.00	40.40	20.20	22.40	20.10	
78127-1418	78127-0418	41	44.00	40.40	20.20	22.90	20.60	
78127-1428	78127-0428	42	44.00	40.40	20.20	23.40	21.10	

REVISED
EC NO: S2007-0721 2007/03/05
DRWN:BOKOK 2007/03/05
CHKD:GOH 2007/03/05
APPR:KLING 2007/03/05
DESCRIPTION
REV
A1

QUALITY SYMBOLS
▼=0
Ⓒ=0

GENERAL TOLERANCES (UNLESS SPECIFIED)

	mm	INCH
4 PLACES	± ---	± ---
3 PLACES	± ---	± ---
2 PLACES	± 0.15	± ---
1 PLACE	± ---	± ---
ANGULAR ± 3 °		

DRAFT WHERE APPLICABLE MUST REMAIN WITHIN DIMENSIONS

DIMENSION STYLE: MM ONLY
SCALE: NTS
DESIGN UNITS: METRIC
THIRD ANGLE PROJECTION

DRAWN BY: YLQIAO DATE: 2006/05/05
CHECKED BY: BOKOK DATE: 2006/06/06
APPROVED BY: PTLIM DATE: 2006/06/06

TITLE: 0.50MM PITCH, FPC CONN. NON-ZIF, SMT

MOLEX INCORPORATED

MATERIAL NO.: SEE TABLE
DOCUMENT NO.: SD-78127-001
SHEET NO.: 6 OF 7

SIZE: A3

THIS DRAWING CONTAINS INFORMATION THAT IS PROPRIETARY TO MOLEX INCORPORATED AND SHOULD NOT BE USED WITHOUT WRITTEN PERMISSION

TIN-BISMUTH PLATING TERMINAL ASSEMBLY PART NUMBERS

ASSY P/N PACKED IN T&R	ASSY P/N W/O PACKAGING	CKT	W	So	F	Bo	B	EMBOSSED TYPE
78127-1069	78127-0069	6	24.00	-	11.50	5.40	3.10	A
78127-1079	78127-0079	7	24.00	-	11.50	5.90	3.60	
78127-1089	78127-0089	8	24.00	-	11.50	6.40	4.10	
78127-1099	78127-0099	9	24.00	-	11.50	6.90	4.60	
78127-1109	78127-0109	10	24.00	-	11.50	7.40	5.10	
78127-1119	78127-0119	11	24.00	-	11.50	7.90	5.60	
78127-1129	78127-0129	12	24.00	-	11.50	8.40	6.10	
78127-1139	78127-0139	13	24.00	-	11.50	8.90	6.60	
78127-1149	78127-0149	14	24.00	-	11.50	9.40	7.10	
78127-1159	78127-0159	15	24.00	-	11.50	9.90	7.60	
78127-1169	78127-0169	16	24.00	-	11.50	10.40	8.10	
78127-1179	78127-0179	17	24.00	-	11.50	10.90	8.60	
78127-1189	78127-0189	18	24.00	-	11.50	11.40	9.10	
78127-1199	78127-0199	19	24.00	-	11.50	11.90	9.60	
78127-1209	78127-0209	20	24.00	-	11.50	12.40	10.10	
78127-1219	78127-0219	21	32.00	28.40	14.20	12.90	10.60	B
78127-1229	78127-0229	22	32.00	28.40	14.20	13.40	11.10	
78127-1239	78127-0239	23	32.00	28.40	14.20	13.90	11.60	
78127-1249	78127-0249	24	32.00	28.40	14.20	14.40	12.10	
78127-1259	78127-0259	25	32.00	28.40	14.20	14.90	12.60	
78127-1269	78127-0269	26	32.00	28.40	14.20	15.40	13.10	
78127-1279	78127-0279	27	32.00	28.40	14.20	15.90	13.60	
78127-1289	78127-0289	28	32.00	28.40	14.20	16.40	14.10	
78127-1299	78127-0299	29	32.00	28.40	14.20	16.90	14.60	
78127-1309	78127-0309	30	32.00	28.40	14.20	17.40	15.10	

ASSY P/N PACKED IN T&R	ASSY P/N W/O PACKAGING	CKT	W	So	F	Bo	B	EMBOSSED TYPE
78127-1319	78127-0319	31	32.00	28.40	14.20	17.90	15.60	B
78127-1329	78127-0329	32	32.00	28.40	14.20	18.40	16.10	
78127-1339	78127-0339	33	32.00	28.40	14.20	18.90	16.60	
78127-1349	78127-0349	34	32.00	28.40	14.20	19.40	17.10	
78127-1359	78127-0359	35	32.00	28.40	14.20	19.90	17.60	
78127-1369	78127-0369	36	32.00	28.40	14.20	20.40	18.10	
78127-1379	78127-0379	37	32.00	28.40	14.20	20.90	18.60	
78127-1389	78127-0389	38	32.00	28.40	14.20	21.40	19.10	
78127-1399	78127-0399	39	44.00	40.40	20.20	21.90	19.60	
78127-1409	78127-0409	40	44.00	40.40	20.20	22.40	20.10	
78127-1419	78127-0419	41	44.00	40.40	20.20	22.90	20.60	
78127-1429	78127-0429	42	44.00	40.40	20.20	23.40	21.10	

REVISED
EC NO: S2007-0721 2007/03/05
DRWN:BOKOK 2007/03/05
CHKD:GOH 2007/03/05
APPR:KLING 2007/03/05
DESCRIPTION
REV
A1

QUALITY SYMBOLS
▼=0
Ⓒ=0

GENERAL TOLERANCES (UNLESS SPECIFIED)

	mm	INCH
4 PLACES	± ---	± ---
3 PLACES	± ---	± ---
2 PLACES	± 0.15	± ---
1 PLACE	± ---	± ---
ANGULAR ± 3 °		

DRAFT WHERE APPLICABLE MUST REMAIN WITHIN DIMENSIONS

DIMENSION STYLE: MM ONLY
SCALE: NTS
DESIGN UNITS: METRIC
THIRD ANGLE PROJECTION

		DATE
DRAWN BY	YLQIAO	2006/05/05
CHECKED BY	BOKOK	2006/06/06
APPROVED BY	PTLIM	2006/06/06

TITLE: 0.50MM PITCH, FPC CONN. NON-ZIF, SMT

MOLEX INCORPORATED

MATERIAL NO.: SEE TABLE
DOCUMENT NO.: SD-78127-001
SHEET NO.: 7 OF 7
SIZE: A3

THIS DRAWING CONTAINS INFORMATION THAT IS PROPRIETARY TO MOLEX INCORPORATED AND SHOULD NOT BE USED WITHOUT WRITTEN PERMISSION