TDK SEMICONDUCTOR CORP.

75T2089/2090/2091
DTMF Transceivers

April 2000

DESCRIPTION

TDK Semiconductor's 75T2089/2090/2091 are complete Dual-Tone Multifrequency (DTMF) Transceivers that can both generate and detect all 16 DTMF tone-pairs. These ICs integrate the performance-proven 75T202 DTMF receiver with a DTMF generator circuit.

The DTMF receiver electrical characteristics are identical to the standard 75T202 device characteristics. The DTMF generator provides performance similar to the Mostek MK5380, but with an improved (tighter) output amplitude range specification and with the addition of independent latch and reset controls.

An additional feature of the 75T2090/2091 is "imprecise" call progress detector. The detector detects the presence of signals in the 305-640 Hz band.

(continued)

FEATURES

- **DTMF Generator and Receiver on one-chip**
- **Call progress detection (2090/2091 only)**
- **Early detect output (2091 only)**
- **DTMF Receiver exhibits excellent speech immunity**
- **Analog input range from -32 to -2 dBm (ref 600Ω)**
- **Three-state outputs (4-bit hexadecimal) from DTMF Receiver**
- **AC coupled, internally biased analog input**
- **Latched DTMF Generator inputs**
- **DTMF output typ. -8 dBm (Low Band) and -5.5 dBm (High Band)**
- **Easy interface for microprocessor dialing**
- **Uses inexpensive 3.579545 MHz crystal for reference**
- **Low-power 5 volt CMOS**

BLOCK DIAGRAM

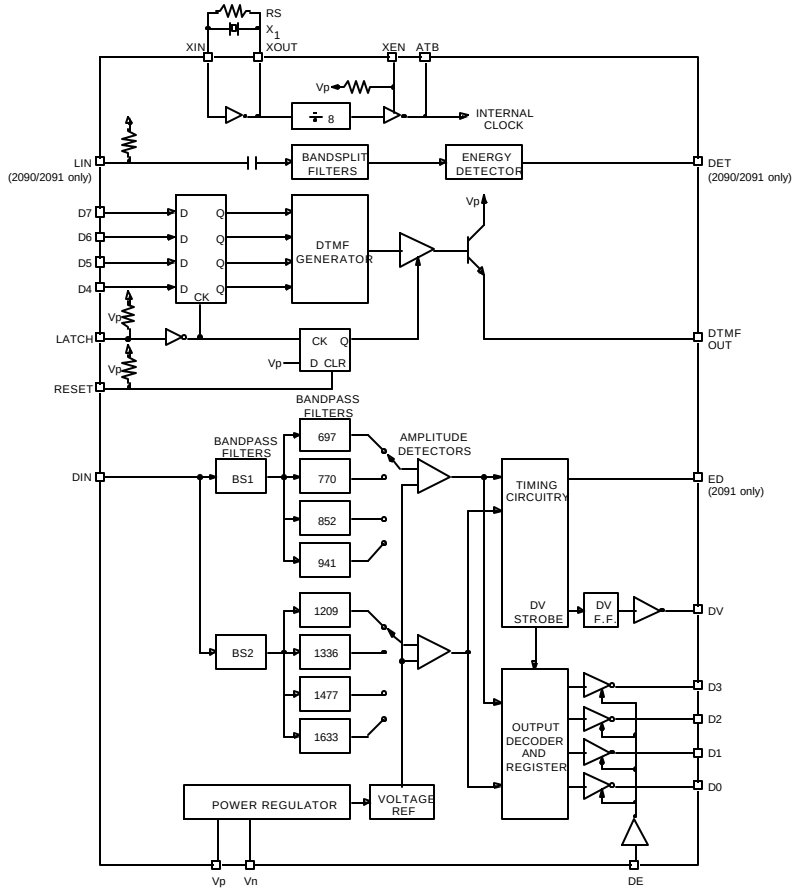

DESCRIPTION (continued)

The 75T2091 also incorporates an early detect function which is useful in multi-channel radio scanning applications. The only external components necessary for the 75T2089/2090/2091 are a 3.58 MHz "colorburst" crystal with a parallel 1 MΩ resistor. This provides the time base for digital functions and switched-capacitor filters in the device. No external filtering is required.

CIRCUIT OPERATION

RECEIVER

The DTMF Receiver in the 75T2089/2090/2091 detects the presence of a valid tone pair (indicating a single dialed digit) on a telephone line or other transmission medium. The analog input is pre-processed by 60 Hz reject and band-splitting filters, then hard-limited to provide Automatic Gain Control. Eight bandpass filters detect the individual tones. The digital post-processor times the tone durations and provides the correctly coded digital outputs. The outputs will drive standard CMOS circuitry, and are three-state enabled to facilitate bus-oriented architectures.

DIN

This pin accepts the analog input. It is internally biased so that the input signal may be AC coupled. The input may be DC coupled as long as it does not exceed the positive supply. Proper input coupling is illustrated in Figure 1.

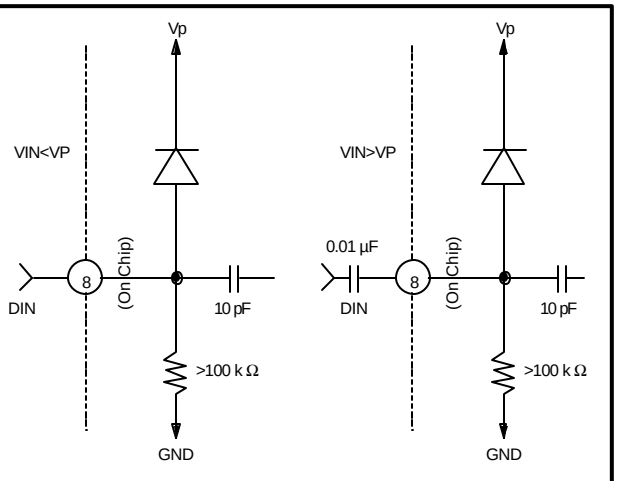

FIGURE 1: Input Coupling

The IC is designed to accept sinusoidal input waveforms but will operate satisfactorily with any input that has the correct fundamental frequency with harmonics greater than -20 dB below the fundamental.

CRYSTAL OSCILLATOR

The IC contains an onboard inverter with sufficient gain to provide oscillation when connected to a low-cost television "colorburst" crystal. The crystal is placed between XIN and XOUT in parallel with a 1Mz resistor, while XEN is tied high. Since the switched-capacitor-filter time base is derived from the crystal oscillator, the frequency accuracy of all portions of the IC depends on the time base tolerance. The DTMF Receiver frequency response and timing is specified for a time base accuracy of at least =0.005%. ATB is a clock output with the frequency of 1/8 of crystal. Other devices may use the same frequency reference by tying their ATB pins to the ATB of a crystal connected device. XIN and XEN of the auxiliary devices must then be tied high and low respectively, XOUT is left floating. XOUT is designed to drive a resonant circuit only and is not intended to drive additional devices. Ten devices may run off a single crystal-connected transceiver as shown in Figure 2.

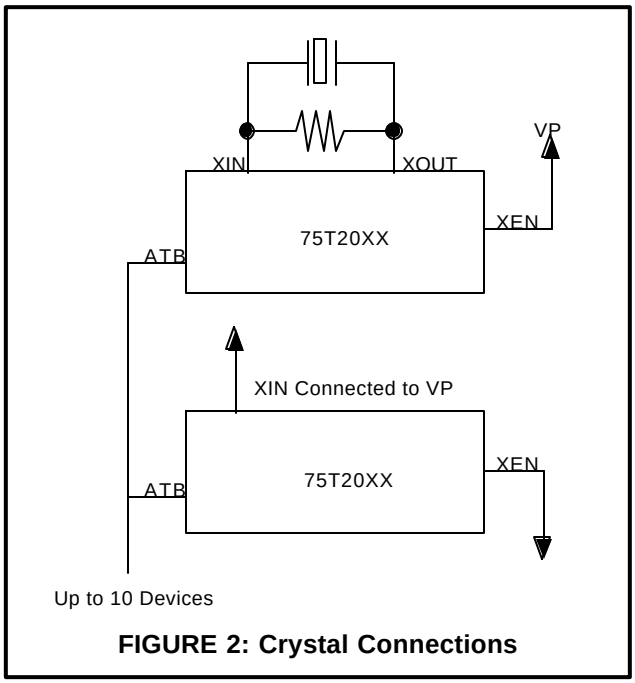

FIGURE 2: Crystal Connections

RECEIVER OUTPUTS AND THE $\overline{DE}$ PIN

Outputs D0, D1, D2, D3 are CMOS push-pull when enabled ($\overline{DE}$ low) and open-circuited (high impedance) when disabled ($\overline{DE}$ high). These digital outputs provide the hexadecimal code corresponding to the detected digit. Figure 3 shows that code.

The digital outputs become valid and DV signals a detection after a valid tone pair has been sensed. The outputs and DV are cleared when a valid pause has been timed.

Hexadecimal Code				
Digit In Out	**D7 D3**	**D6 D2**	**D5 D1**	**D4 D0**
1	0	0	0	1
2	0	0	1	0
3	0	0	1	1
4	0	1	0	0
5	0	1	0	1
6	0	1	1	0
7	0	1	1	1
8	1	0	0	0
9	1	0	0	1
0	1	0	1	0
*	1	0	1	1
#	1	1	0	0
A	1	1	0	1
B	1	1	1	0
C	1	1	1	1
D	0	0	0	0

FIGURE 3

ED OUTPUT (75T2091 only)

The ED output goes high as soon as the 75T2091 begins to detect a DTMF tone pair and falls when the 75T2091 begins to detect a pause. The D1, D2, D4, and D8 outputs are guaranteed to be valid when DV is high, but are not necessarily valid when ED is high.

GENERATOR

The DTMF generator responds to a hexadecimal code input with a valid tone pair. Pins D4-D7 are the data inputs for the generator. A high to low transition on $\overline{LATCH}$ causes the hexadecimal code to be latched internally and generation of the appropriate DTMF tone pair to begin. The DTMF output is disabled by a high on RESET and will not resume until new data is latched in.

DIGITAL INPUTS

The D4, D5, D6, D7, $\overline{LATCH}$, RESET inputs to the DTMF generator may be interfaced to open-collector TTL with a pull-up resistor or standard CMOS. These inputs follow the same hexadecimal code format as the DTMF receiver output. Figure 4 shows the code for each digit. The dialing matrix and detection frequency table below list the frequencies of the digits.

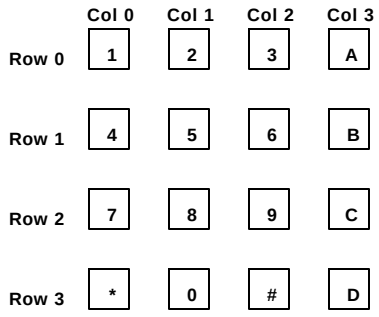

NOTE: Column 3 is for special applications and is not normally used in telephone dialir

FIGURE 4: DTMF Dialing Matrix

DETECTION FREQUENCY

Low Group f_0	High Group f_0
Row 0 = 697Hz	Column 0 = 1209Hz
Row 1 = 770Hz	Column 1 = 1336Hz
Row 2 = 852Hz	Column 2 = 1477Hz
Row 3 = 941Hz	Column 3 = 1633Hz

DTMF OUT

The output amplitude characteristics listed in the specifications are given for a supply voltage of 5.0V. However, the output level is directly proportional to the supply, so variations in it will affect the DTMF output. A recommended line interface for this output is shown in Figure 5.

CALL PROGRESS DETECTION (75T2090/2091)

The 75T2090/2091 have a Call Progress Detector that consists of a bandpass filter and an energy detector for turning the on/off cadences into a microprocessor compatible signal.

DET OUTPUT (75T2090/2091)

The output is TTL compatible and will be of a frequency corresponding to the various candences of Call Progress signals such as: on 0.5 sec/off 0.5 sec for a busy tone, on 0.25 sec/off 0.25 sec for a reorder tone and on 0.8-1.2 sec/off 2.7-3.3 sec for an audible ring tone.

LIN INPUT (75T2090/2091)

This analog input accepts the call progress signal and should be used in the same manner as the receiver input DIN.

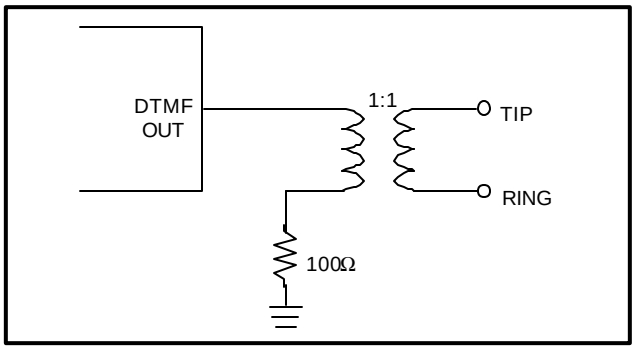

FIGURE 5: DTMF Output

ELECTRICAL SPECIFICATIONS

ABSOLUTE MAXIMUM RATINGS

Operating above absolute maximum ratings may damage the device.

PARAMETER	RATING
DC Supply Voltage (Vp - Vn)	+7V
Voltage at any Pin (Vn = 0)	-0.3 to Vp + 0.3V
DIN Voltage	Vp + 0.5 to Vp - 10V
Current through any Protection Device	=20mA
Operating Temperature Range	-40 to + 85°C
Storage Temperature	-65 to 150°C

RECOMMENDED OPERATING CONDITIONS

PARAMETER	CONDITIONS	MIN	NOM	MAX	UNIT
Supply Voltage		4.5		5.5	V
Power Supply Noise (wide band)				10	mVp-p
Ambient Temperature		-40		+85	°C
Crystal Frequency		-0.01		+0.01	%
(F Nominal = 3.579545MHz)					
Crystal Shunt Resistor		0.8		1.2	MΩ
DTMF OUT Load Resistance		100			Ω

DIGITAL AND DC REQUIREMENTS

The following electrical specifications apply to the digital input and output signals over the recommended operating range unless otherwise noted. The specifications do not apply to the following pins: LIN, DIN, XIN, XOUT, and DTMF OUT. Positive current is defined as entering the circuit. Vn = 0 unless otherwise stated.

PARAMETER	CONDITIONS	MIN	NOM	MAX	UNIT
Supply Current*			15	30	mA
Power Dissipation				225	mW
Input Voltage High		0.7Vp			V
Input Voltage Low				0.3Vp	V
Input Current High				10	µA
Input Current Low		-10			µA
Output Voltage High	Ioh = -0.2mA	Vp-0.5			V
Output Voltage Low	Iol = +0.4mA			Vn+0.5	V
* with DTMF output disabled					

DTMF RECEIVER: Electrical Characteristics

PARAMETER	CONDITIONS	MIN	NOM	MAX	UNIT
Frequency Detect Bandwidth		=(1.5+2Hz)	=2.3	=3.5	%Fo
Amplitude for Detection	Each Tone	-32		-2	dBm/tone
Twist Tolerance		-10		+10	dB
60Hz Tolerance				0.8	Vrms
Dial Tone Tolerance	Precise Dial Tone			0	dB*
Speech Immunity	MITEL Tape #CM7290		2		hits
Noise Tolerance	MITEL Tape #CM7290			-12	dB*
Input Impedance		100			kΩ
* Referenced to lowest amplitude tone					

DTMF RECEIVER: Timing Characteristics

PARAMETER		CONDITIONS	MIN	NOM	MAX	UNIT
TON	Tone Time for Detect		40			ms
TON	Tone Time for No Detect				20	ms
TOFF	Pause Time for Redetection		40			ms
TOFF	Pause Time for Bridging				20	ms
TD1	Detect Time		25		46	ms
TR1	Release Time		35		50	ms

DTMF RECEIVER: Timing Characteristics (Continued)

PARAMETER		CONDITIONS	MIN	NOM	MAX	UNIT
TSU1	Data Set Up Time		7			µs
THD1	Data Hold Time		4.2		5.0	ms
TED	ED Detect Time	75T2091 only	7		22	ms
BER	ED Release Time	75T2091 only	2		18	ms
	Output Enable Time				200	ns
	Output Disable Time				200	ns

DTMF GENERATOR: Electrical Characteristics

Frequency Accuracy		-1.0		+1.0	%Fo
Output Amplitude	R1 = 100Ω to Vn, Vp - Vn = 5.0V				
Low Band		-9.2		-7.2	dBm
High Band		-6.6		-4.6	dBm
Output Distortion	DC to 50 kHz			-20	dB

DTMF GENERATOR: Timing Characteristics

TSTART	Start-Up Time				2.5	µs
TSU2	Data Set-Up Time		100			ns
THD2	Data Hold Time		50			ns
TRP	RESET Pulse Width		100			ns
TPW	$\overline{\text{LATCH}}$ Pulse Width		100			ns

CALL PROGRESS DETECTOR: Electrical Characteristics (75T2090/2091 only)

Amplitude for Detection	305 Hz-640 Hz	-40		0	dBm
Amplitude for No Detection	305 Hz-640 Hz			-50	dBm
	f>2200 Hz, <160 Hz			-25	dBm
Detect Output	Logic 0			0.5	V
	Logic 1	4.5			V
"LIN" Input	Max. Voltage	V_{DD}-10		V_{DD}	V
Input Impedance	500 Hz	100			kΩ

CALL PROGRESS DETECTOR: Electrical Characteristics (Continued)

PARAMETER	CONDITIONS	MIN	NOM	MAX	UNIT
TON Signal Time for Detect		40			ms
TON Signal Time for No Detect				10	ms
TOFF Interval Time for Detect			40		ms
TOFF Interval Time for No Detect				20	ms
TD2 Detect Time				40	ms
TR2 Release Time				40	ms

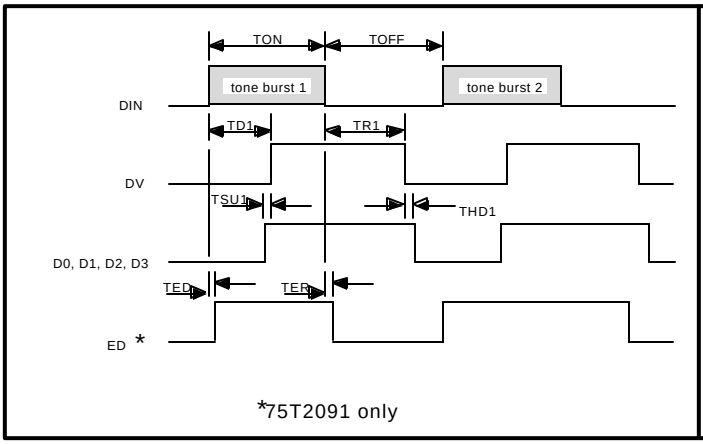

FIGURE 6: DTMF Decoder

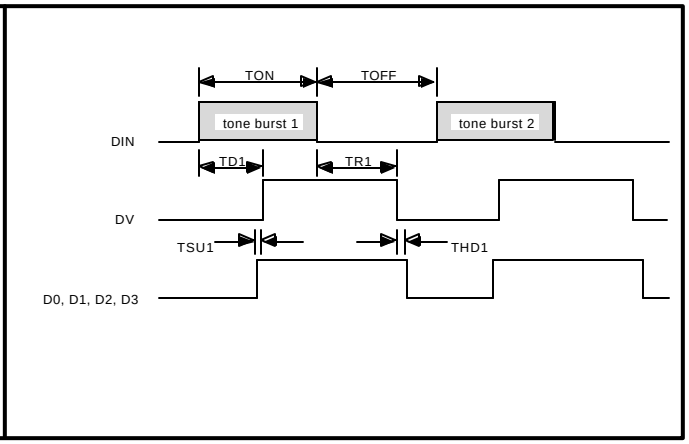

FIGURE 7: Call Progress Detector (75T2090/2091 only)

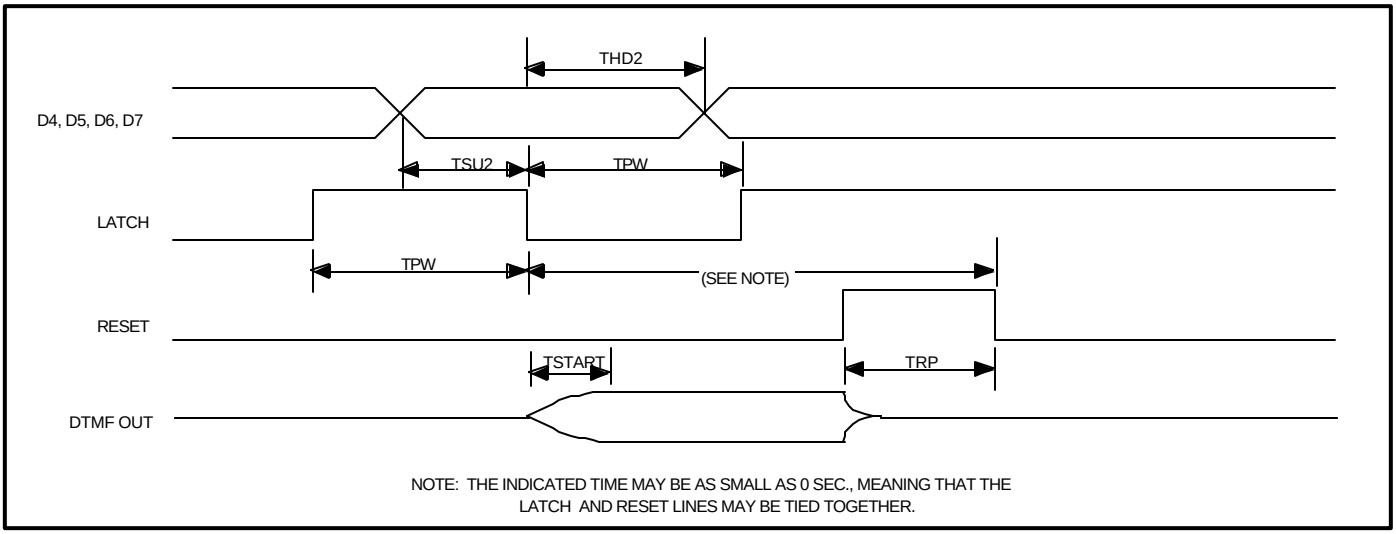

FIGURE 8: DTMF Generator

MECHANICAL SPECIFICATIONS

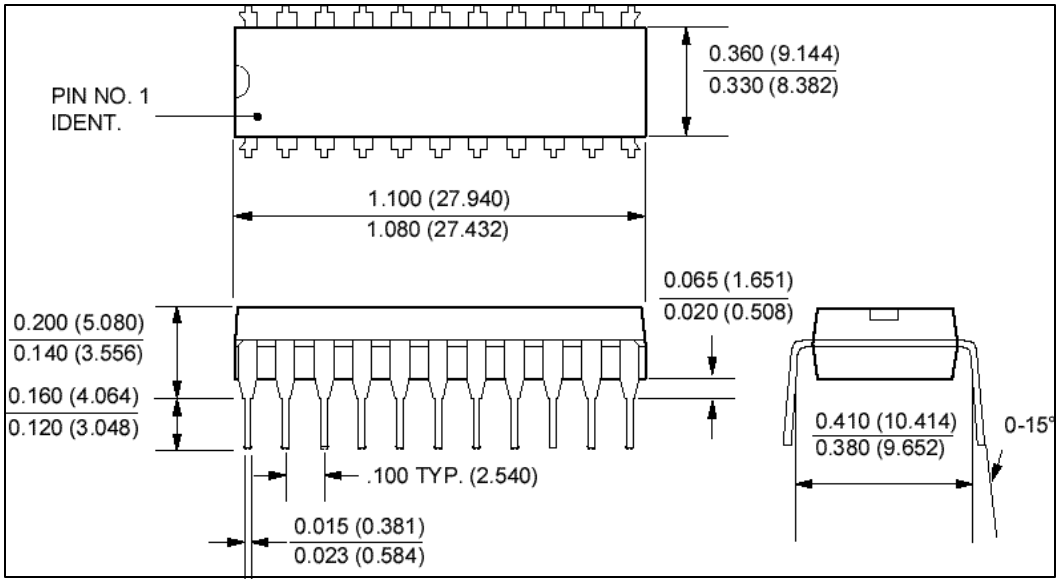

22-Pin DIP

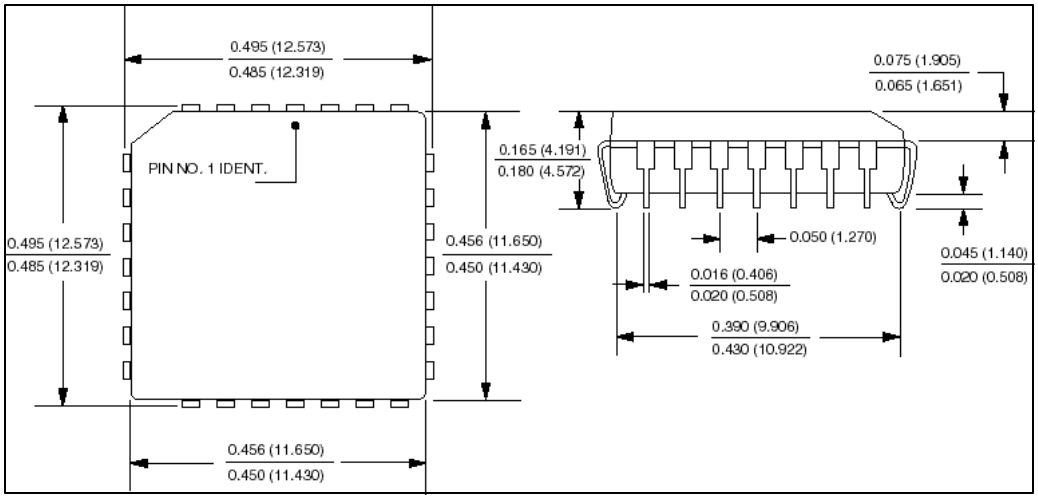

28-Pin PLCC

PACKAGE PIN DESIGNATIONS

(Top View)

CAUTION: Use handling procedures necessary for a static sensitive component.

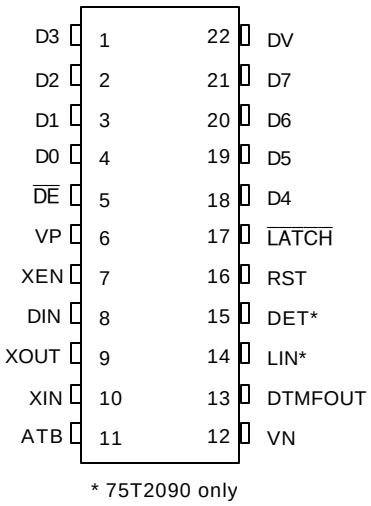

* 75T2090 only

75T2089/2090
22-Pin DIP

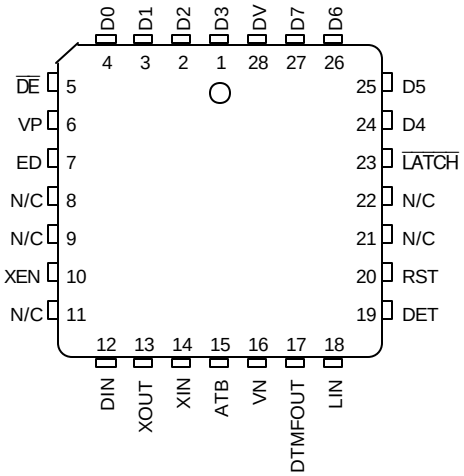

75T2091
28-Pin PLCC

ORDERING INFORMATION

PART DESCRIPTION	ORDER NUMBER	PACKAGING MARK
75t2089 22-Pin Plastic DIP	75T2089-IP	75T2089-IP
75T2090 22-Pin DIP	75T2090-IP	75T2090-IP
75T2091 28-Pin PLCC	75T2091-IH	75T2091-IH

No responsibility is assumed by TDK Semiconductor Corporation for use of this product nor for any infringements of patents and trademarks or other rights of third parties resulting from its use. No license is granted under any patents, patent rights or trademarks of TDK Semiconductor Corporation and the company reserves the right to make changes in specifications at any time without notice. Accordingly, the reader is cautioned to verify that the data sheet is current before placing orders.

TDK Semiconductor Corporation, 2642 Michelle Drive, Tustin, CA 92780-7019, (714) 508-8800, FAX: (714) 508-8877

©1991 - 2000 TDK Semiconductor Corporation

04/24/00- rev. E