SLLS159E − MARCH 1993 − REVISED NOVEMBER 2003

- **Meet or Exceed Standards TIA/EIA-422-B and ITU Recommendation V.11**
- **BiCMOS Process Technology**
- **Low Supply-Current Requirements: 9 mA Max**
- **Low Pulse Skew**
- **Receiver Input Impedance . . . 17 kΩ Typ**
- **Receiver Input Sensitivity . . . ±200 mV**
- **Receiver Common-Mode Input Voltage Range of −7 V to 7 V**
- **Operate From Single 5-V Power Supply**
- **Glitch-Free Power-Up/Power-Down Protection**
- **Receiver 3-State Outputs Active-Low Enable for SN65C1167 and SN75C1167 Only**
- **Improved Replacements for the MC34050 and MC34051**

SN65C1167 . . . DB OR NS PACKAGE
SN75C1167 . . . DB, N, OR NS PACKAGE
(TOP VIEW)

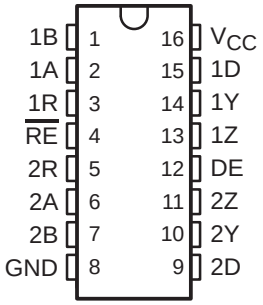

SN65C1168 . . . N, NS, OR PW PACKAGE
SN75C1168 . . . DB, N, NS, OR PW PACKAGE
(TOP VIEW)

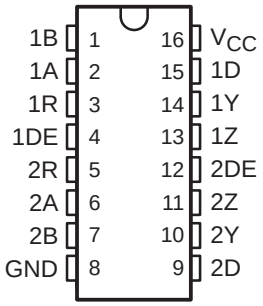

description/ordering information

The SN65C1167, SN75C1167, SN65C1168, and SN75C1168 dual drivers and receivers are integrated circuits designed for balanced transmission lines. The devices meet TIA/EIA-422-B and ITU recommendation V.11.

ORDERING INFORMATION

T_A	PACKAGE†		ORDERABLE PART NUMBER	TOP-SIDE MARKING
0°C to 70°C	PDIP (N)	Tube	SN75C1167N	SN75C1167N
	SOP (NS)	Tape and reel	SN75C1167NSR	75C1167
	SSOP (DB)	Tape and reel	SN75C1167DBR	CA1167
	PDIP (N)	Tube	SN75C1168N	SN75C1168N
	SOP (NS)	Tape and reel	SN75C1168NSR	75C1168
	SSOP (DB)	Tape and reel	SN75C1168DBR	CA1168
	TSSOP (PW)	Tube	SN75C1168PW	CA1168
		Tape and reel	SN75C1168PWR	
−40°C to 85°C	SOP (NS)	Tape and reel	SN65C1167NSR	65C1167
	SSOP (DB)	Tape and reel	SN65C1167DBR	CB1167
	PDIP (N)	Tube	SN65C1168N	SN65C1168N
	SOP (NS)	Tape and reel	SN65C1168NSR	65C1168
	TSSOP (PW)	Tube	SN65C1168PW	CB1168
		Tape and reel	SN65C1168PWR	

† Package drawings, standard packing quantities, thermal data, symbolization, and PCB design guidelines are available at www.ti.com/sc/package.

Please be aware that an important notice concerning availability, standard warranty, and use in critical applications of Texas Instruments semiconductor products and disclaimers thereto appears at the end of this data sheet.

PRODUCTION DATA information is current as of publication date. Products conform to specifications per the terms of Texas Instruments standard warranty. Production processing does not necessarily include testing of all parameters.

Copyright © 2003, Texas Instruments Incorporated

description/ordering information (continued)

The SN65C1167 and SN75C1167 combine dual 3-state differential line drivers and 3-state differential line receivers, both of which operate from a single 5-V power supply. The driver and receiver have active-high and active-low enables, respectively, which can be connected together externally to function as direction control. The SN65C1168 and SN75C1168 drivers have individual active-high enables.

Function Tables

EACH DRIVER

INPUT D	ENABLE DE	OUTPUTS	
		Y	Z
H	H	H	L
L	H	L	H
X	L	Z	Z

SN75C1167, EACH RECEIVER

DIFFERENTIAL INPUTS A − B	ENABLE $\overline{RE}$	OUTPUT R
$V_{ID} \geq 0.2$ V	L	H
-0.2 V $< V_{ID} < 0.2$ V	L	?
$V_{ID} \leq -0.2$ V	L	L
X	H	Z
Open	L	H

H = high level, L = low level, ? = indeterminate, X = irrelevant, Z = high impedance (off)

logic diagram (positive logic)

SN65C1167/SN75C1167

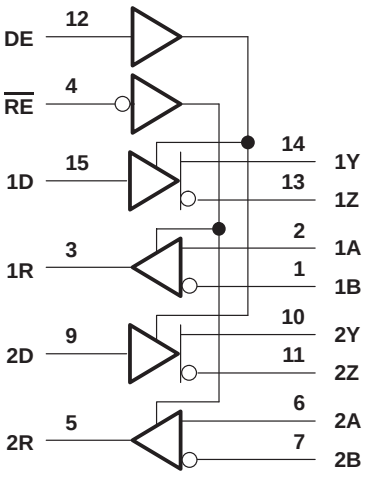

SN65C1168, SN75C1168

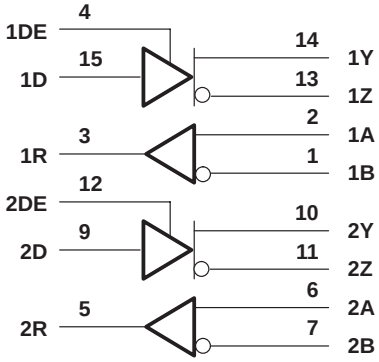

schematics of inputs

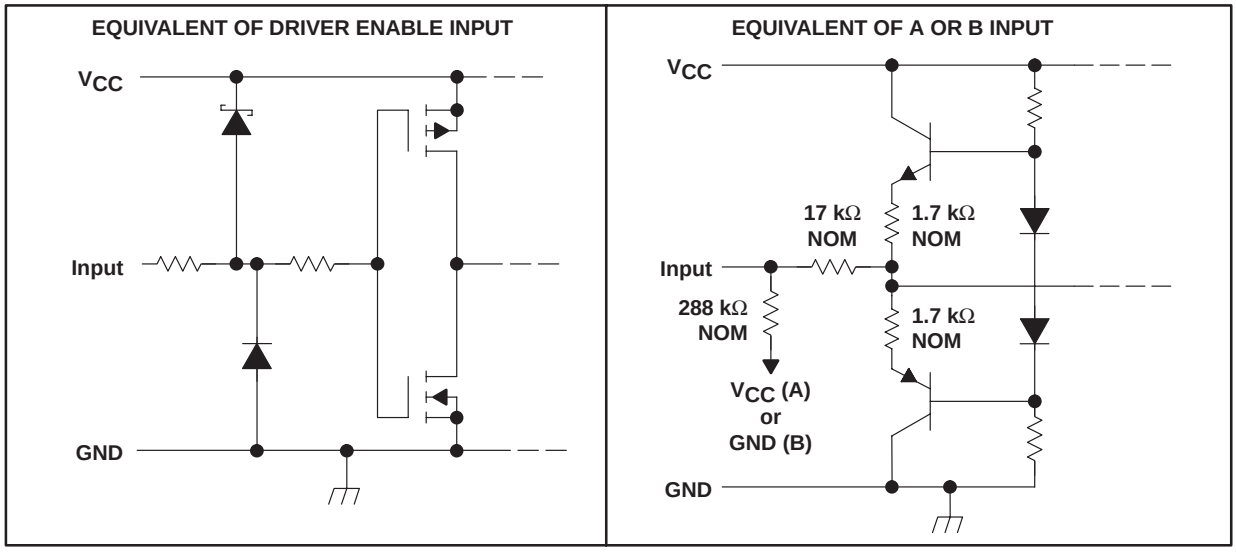

schematics of outputs

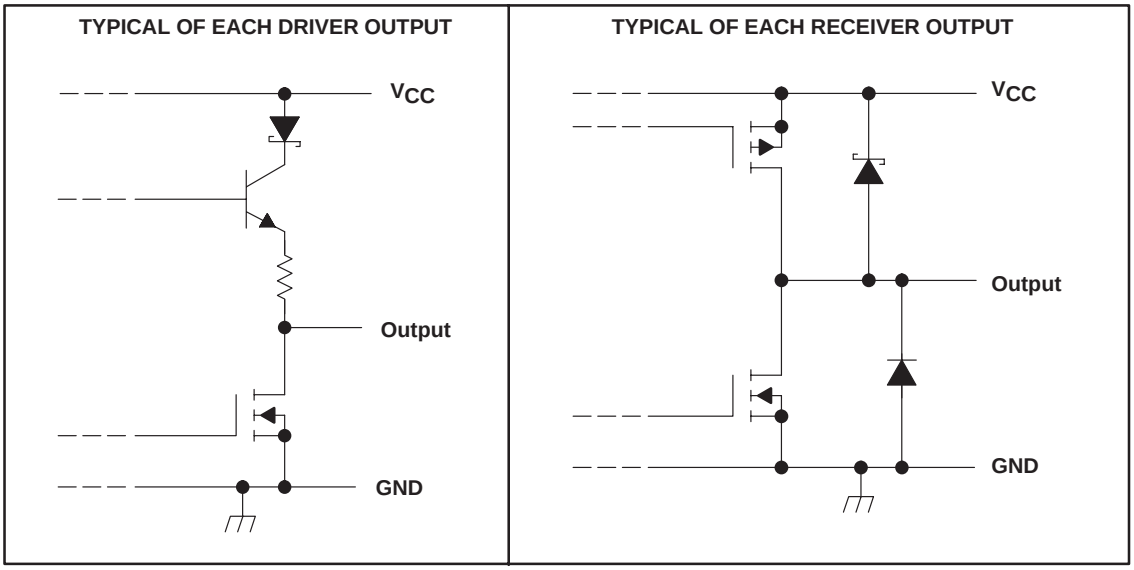

absolute maximum ratings over operating free-air temperature range (unless otherwise noted)†

Supply voltage range, V_{CC} (see Note 1) . . . . . −0.5 V to 7 V
Input voltage range, V_I . . . . . −0.5 V to V_{CC} + 0.5 V
Input voltage range, V_I (A or B, Receiver) . . . . . −11 V to 14 V
Differential input voltage range, V_{ID}, Receiver (see Note 2) . . . . . −14 V to 14 V
Output voltage range, V_O, Driver . . . . . −5 V to 7 V
Clamp current range, I_{IK} or I_{OK}, Driver . . . . . ±20 mA
Output current range, I_O, Driver . . . . . ±150 mA
Supply current, I_{CC} . . . . . 200 mA
GND current . . . . . −200 mA
Output current range, I_O, Receiver . . . . . ±25 mA
Operating virtual junction temperature . . . . . 150°C
Package thermal impedance, θ_{JA} (see Notes 3 and 4): DB package . . . . . 82°C/W
N package . . . . . 67°C/W
NS package . . . . . 64°C/W
PW package . . . . . 108°C/W
Storage temperature range, T_{stg} . . . . . −65°C to 150°C

† Stresses beyond those listed under “absolute maximum ratings” may cause permanent damage to the device. These are stress ratings only, and functional operation of the device at these or any other conditions beyond those indicated under “recommended operating conditions” is not implied. Exposure to absolute-maximum-rated conditions for extended periods may affect device reliability.

NOTES: 1. All voltage values except differential input voltage are with respect to the network GND.
2. Differential input voltage is measured at the noninverting terminal with respect to the inverting terminal.
3. Maximum power dissipation is a function of $T_J(max)$, θ_{JA}, and T_A. The maximum allowable power dissipation at any allowable ambient temperature is $P_D = (T_J(max) - T_A)/\theta_{JA}$. Selecting the maximum of 150°C can affect reliability.
4. The package thermal impedance is calculated in accordance with JESD 51-7.

recommended operating conditions

				MIN	NOM	MAX	UNIT
V_{CC}	Supply voltage			4.5	5	5.5	V
V_{IC}	Common-mode input voltage (see Note 5)	Receiver				±7	V
V_{ID}	Differential input voltage	Receiver				±7	V
V_{IH}	High-level input voltage	Except A, B		2			V
V_{IL}	Low-level input voltage	Except A, B				0.8	V
I_{OH}	High-level output current	Receiver				−6	mA
		Driver				−20	
I_{OL}	Low-level output current	Receiver				6	mA
		Driver				20	
T_A	Operating free-air temperature		SN75C1167, SN75C1168	0		70	°C
			SN65C1167, SN65C1168	−40		85	

NOTE 5: Refer to TIA/EIA-422-B for exact conditions.

DRIVER SECTION

electrical characteristics over recommended ranges of supply voltage and operating free-air temperature (unless otherwise noted)

PARAMETER		TEST CONDITIONS			MIN	TYP†	MAX	UNIT
V_{IK}	Input clamp voltage	I_I = −18 mA					−1.5	V
V_{OH}	High-level output voltage	V_{IH} = 2 V,	V_{IL} = 0.8 V,	I_{OH} = −20 mA	2.4	3.4		V
V_{OL}	Low-level output voltage	V_{IH} = 2 V,	V_{IL} = 0.8 V,	I_{OL} = 20 mA		0.2	0.4	V
$\|V_{OD1}\|$	Differential output voltage	I_O = 0 mA			2		6	V
$\|V_{OD2}\|$	Differential output voltage	R_L = 100 Ω, See Figure 1 and Note 5			2	3.1		V
$\Delta\|V_{OD}\|$	Change in magnitude of differential output voltage						±0.4	V
V_{OC}	Common-mode output voltage						±3	V
$\Delta\|V_{OC}\|$	Change in magnitude of common-mode output voltage						±0.4	V
$I_{O(OFF)}$	Output current with power off (see Note 3)	V_{CC} = 0 V	V_O = 6 V				100	µA
			V_O = −0.25 V				−100	µA
I_{OZ}	High-impedance-state output current	V_O = 2.5 V					20	µA
		V_O = 5 V					−20	
I_{IH}	High-level input current	$V_I = V_{CC}$ or V_{IH}					1	µA
I_{IL}	Low-level input current	V_I = GND or V_{IL}					−1	µA
I_{OS}	Short-circuit output current	$V_O = V_{CC}$ or GND, See Note 6			−30		−150	mA
I_{CC}	Supply current (total package)	No load, Enabled	$V_I = V_{CC}$ or GND			4	6	mA
			V_I = 2.4 or 0.5 V, See Note 7			5	9	
C_i	Input capacitance					6		pF

† All typical values are at V_{CC} = 5 V and T_A = 25°C.

NOTES: 5. Refer to TIA/EIA-422-B for exact conditions.
6. Not more than one output should be shorted at a time, and the duration of the short circuit should not exceed one second.
7. This parameter is measured per input, while the other inputs are at V_{CC} or GND.

switching characteristics over recommended ranges of supply voltage and operating free-air temperature (unless otherwise noted)

PARAMETER		TEST CONDITIONS		MIN	TYP†	MAX	UNIT
t_{PHL}	Propagation delay time, high- to low-level output	$R_1 = R_2 = 50\ \Omega$, $C_1 = C_2 = C_3 = 40$ pF, See Figure 2	$R_3 = 500\ \Omega$, S1 is open,		7	12	ns
t_{PLH}	Propagation delay time, low- to high-level output				7	12	ns
$t_{sk(p)}$	Pulse skew				0.5	4	ns
t_r	Rise time	$R_1 = R_2 = 50\ \Omega$, $C_1 = C_2 = C_3 = 40$ pF, See Figure 3	$R_3 = 500\ \Omega$, S1 is open,		5	10	ns
t_f	Fall time				5	10	ns
t_{PZH}	Output enable time to high level	$R_1 = R_2 = 50\ \Omega$, $C_1 = C_2 = C_3 = 40$ pF, See Figure 4	$R_3 = 500\ \Omega$, S1 is closed,		10	19	ns
t_{PZL}	Output enable time to low level				10	19	ns
t_{PHZ}	Output disable time from low level	$R_1 = R_2 = 50\ \Omega$, $C_1 = C_2 = C_3 = 40$ pF, See Figure 4	$R_3 = 500\ \Omega$, S1 is closed,		7	16	ns
t_{PLZ}	Output disable time from high level				7	16	ns

† All typical values are at V_{CC} = 5 V and T_A = 25°C.

RECEIVER SECTION

electrical characteristics over recommended ranges of common-mode input voltage, supply voltage, and operating free-air temperature (unless otherwise noted)

PARAMETER			TEST CONDITIONS		MIN	TYP†	MAX	UNIT
V_{IT+}	Positive-going input threshold voltage, differential input						0.2	V
V_{IT-}	Negative-going input threshold voltage, differential input				−0.2‡			V
V_{hys}	Input hysteresis ($V_{IT+} - V_{IT-}$)					60		mV
V_{IK}	Input clamp voltage, $\overline{RE}$	SN75C1167	I_I = −18 mA				−1.5	V
V_{OH}	High-level output voltage		V_{ID} = 200 mV,	I_{OH} = −6 mA	3.8	4.2		V
V_{OL}	Low-level output voltage		V_{ID} = −200 mV,	I_{OL} = 6 mA		0.1	0.3	V
I_{OZ}	High-impedance-state output current	SN75C1167	V_O = V_{CC} or GND			±0.5	±5	µA
I_I	Line input current		Other input at 0 V	V_I = 10 V			1.5	mA
				V_I = −10 V			−2.5	
I_I	Enable input current, $\overline{RE}$	SN75C1167	V_I = V_{CC} or GND				±1	µA
r_i	Input resistance		V_{IC} = −7 V to 7 V,	Other input at 0 V	4	17		kΩ
I_{CC}	Supply current (total package)		No load, Enabled	V_I = V_{CC} or GND		4	6	mA
				V_{IH} = 2.4 V or 0.5 V, See Note 5		5	9	

† All typical values are at V_{CC} = 5 V and T_A = 25°C.
‡ The algebraic convention, where the less positive (more negative) limit is designated as minimum, is used in this data sheet for common-mode input voltage and threshold voltage levels only.
NOTE 5: Refer to TIA/EIA-422-B for exact conditions.

switching characteristics over recommended ranges of supply voltage and operating free-air temperature (unless otherwise noted) (see Note 8)

PARAMETER		TEST CONDITIONS	MIN	TYP†	MAX	UNIT
t_{PLH}	Propagation delay time, low- to high-level output	See Figure 5	9	17	27	ns
t_{PHL}	Propagation delay time, high- to low-level output		9	17	27	ns
t_{TLH}	Transition time, low- to high-level output	V_{IC} = 0 V, See Figure 5		4	9	ns
t_{THL}	Transition time, high- to low-level output			4	9	ns
t_{PZH}	Output enable time to high level	R_L = 1 kW, See Figure 6		13	22	ns
t_{PZL}	Output enable time to low level			13	22	ns
t_{PHZ}	Output disable time from high level			13	22	ns
t_{PLZ}	Output disable time from low level			13	22	ns

† All typical values are at V_{CC} = 5 V and T_A = 25°C.
NOTE 8: Measured per input while the other inputs are at V_{CC} or GND

PARAMETER MEASUREMENT INFORMATION

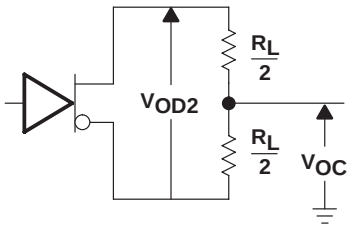

Figure 1. Driver Test Circuit, V_{OD} and V_{OC}

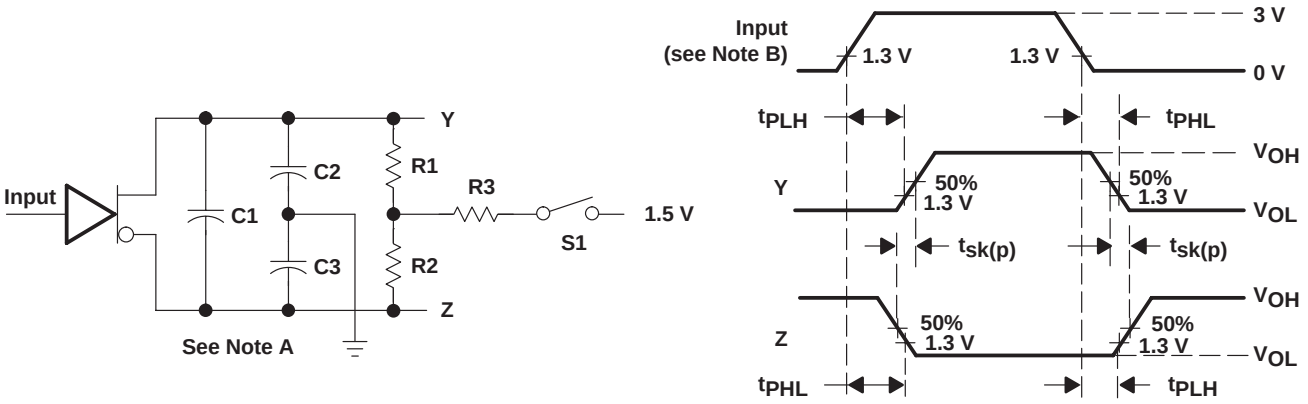

TEST CIRCUIT **VOLTAGE WAVEFORMS**

NOTES: A. C1, C2, and C3 include probe and jig capacitance.
B. The input pulse is supplied by a generator having the following characteristics: PRR = 1 MHz, duty cycle = 50%, $t_r = t_f \le 6$ ns.

Figure 2. Driver Test Circuit and Voltage Waveforms

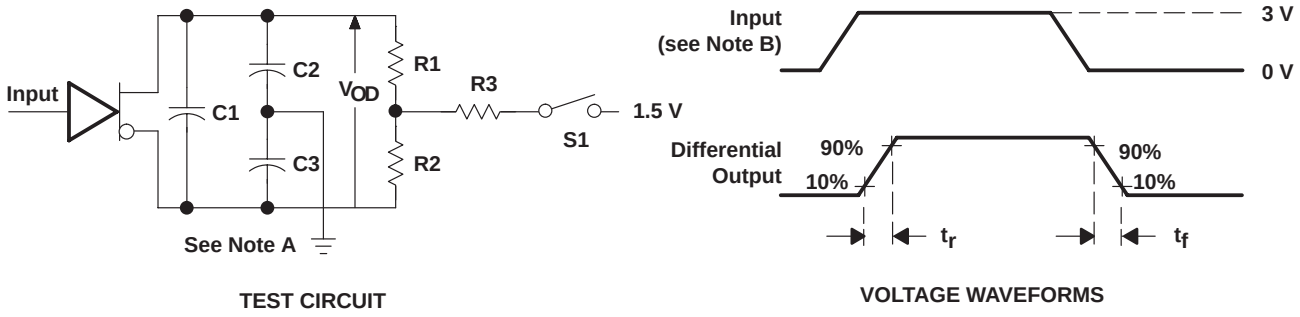

TEST CIRCUIT **VOLTAGE WAVEFORMS**

NOTES: A. C1, C2, and C3 include probe and jig capacitance.
B. The input pulse is supplied by a generator having the following characteristics: PRR = 1 MHz, duty cycle = 50%, $t_r = t_f \le 6$ ns.

Figure 3. Driver Test Circuit and Voltage Waveforms

PARAMETER MEASUREMENT INFORMATION

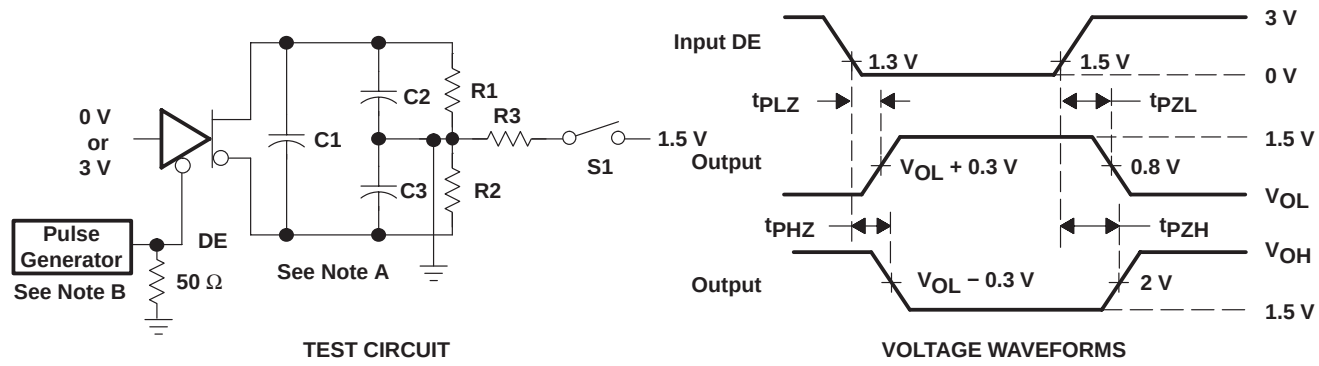

NOTES: A. C1, C2, and C3 include probe and jig capacitance.
B. The input pulse is supplied by a generator having the following characteristics: PRR = 1 MHz, duty cycle = 50%, $t_r = t_f \le 6$ ns.

Figure 4. Driver Test Circuit and Voltage Waveforms

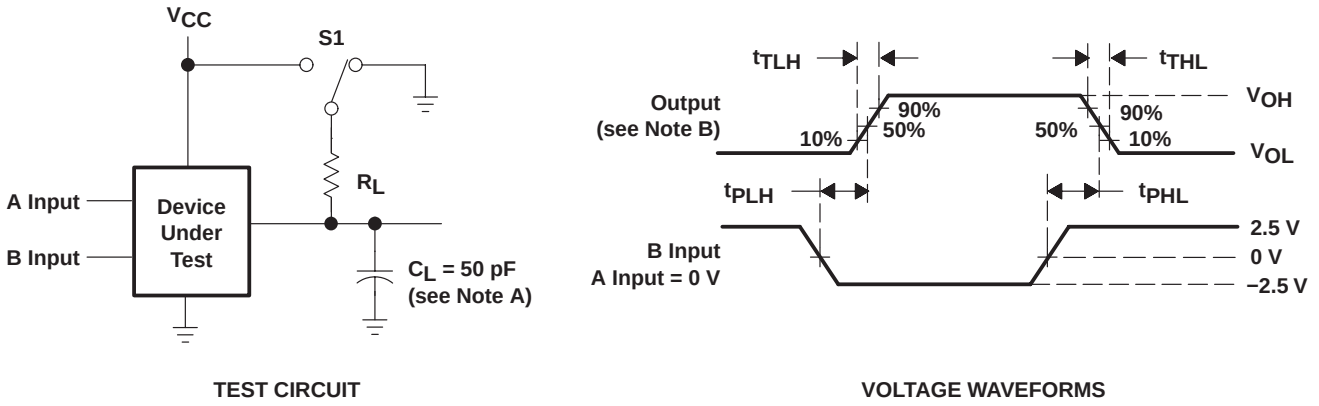

NOTES: A. C_L includes probe and jig capacitance.
B. The pulse generator has the following characteristics: PRR ≤ 1 MHz, duty cycle = 50%, $t_r = t_f \le 6$ ns.

Figure 5. Receiver Test Circuit and Voltage Waveforms

PARAMETER MEASUREMENT INFORMATION

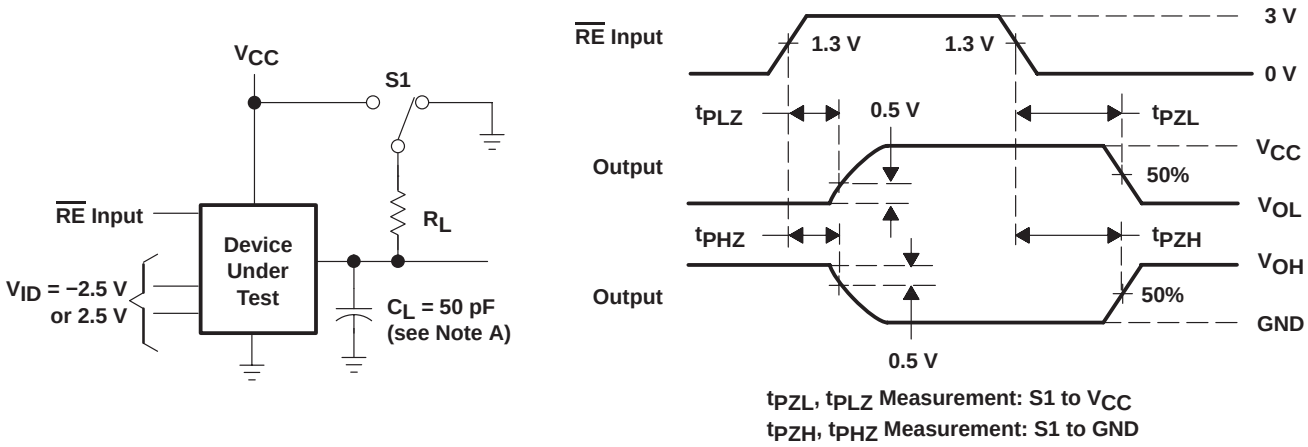

TEST CIRCUIT **VOLTAGE WAVEFORMS**

NOTES: A. C_L includes probe and jig capacitance.
B. The pulse generator has the following characteristics: PRR ≤ 1 MHz, duty cycle = 50%, $t_r = t_f \leq 6$ ns.

Figure 6. Receiver Test Circuit and Voltage Waveforms

PACKAGING INFORMATION

Orderable Device	Status (1)	Package Type	Package Drawing	Pins	Package Qty	Eco Plan (2)	Lead/Ball Finish	MSL Peak Temp (3)
SN65C1167NSLE	OBSOLETE	SO	NS	16		TBD	Call TI	Call TI
SN65C1167NSR	ACTIVE	SO	NS	16	2000	Green (RoHS & no Sb/Br)	CU NIPDAU	Level-1-260C-UNLIM
SN65C1167NSRE4	ACTIVE	SO	NS	16	2000	Green (RoHS & no Sb/Br)	CU NIPDAU	Level-1-260C-UNLIM
SN65C1168N	ACTIVE	PDIP	N	16	25	Pb-Free (RoHS)	CU NIPDAU	N / A for Pkg Type
SN65C1168NE4	ACTIVE	PDIP	N	16	25	Pb-Free (RoHS)	CU NIPDAU	N / A for Pkg Type
SN65C1168NSR	ACTIVE	SO	NS	16	2000	Green (RoHS & no Sb/Br)	CU NIPDAU	Level-1-260C-UNLIM
SN65C1168NSRG4	ACTIVE	SO	NS	16	2000	Green (RoHS & no Sb/Br)	CU NIPDAU	Level-1-260C-UNLIM
SN65C1168PW	ACTIVE	TSSOP	PW	16	90	Green (RoHS & no Sb/Br)	CU NIPDAU	Level-1-260C-UNLIM
SN65C1168PWE4	ACTIVE	TSSOP	PW	16	90	Green (RoHS & no Sb/Br)	CU NIPDAU	Level-1-260C-UNLIM
SN65C1168PWR	ACTIVE	TSSOP	PW	16	2000	Green (RoHS & no Sb/Br)	CU NIPDAU	Level-1-260C-UNLIM
SN65C1168PWRE4	ACTIVE	TSSOP	PW	16	2000	Green (RoHS & no Sb/Br)	CU NIPDAU	Level-1-260C-UNLIM
SN75C1167DBR	ACTIVE	SSOP	DB	16	2000	Green (RoHS & no Sb/Br)	CU NIPDAU	Level-1-260C-UNLIM
SN75C1167DBRE4	ACTIVE	SSOP	DB	16	2000	Green (RoHS & no Sb/Br)	CU NIPDAU	Level-1-260C-UNLIM
SN75C1167N	ACTIVE	PDIP	N	16	25	Pb-Free (RoHS)	CU NIPDAU	N / A for Pkg Type
SN75C1167NE4	ACTIVE	PDIP	N	16	25	Pb-Free (RoHS)	CU NIPDAU	N / A for Pkg Type
SN75C1167NSLE	OBSOLETE	SO	NS	16		TBD	Call TI	Call TI
SN75C1167NSR	ACTIVE	SO	NS	16	2000	Green (RoHS & no Sb/Br)	CU NIPDAU	Level-1-260C-UNLIM
SN75C1167NSRG4	ACTIVE	SO	NS	16	2000	Green (RoHS & no Sb/Br)	CU NIPDAU	Level-1-260C-UNLIM
SN75C1168DBR	ACTIVE	SSOP	DB	16	2000	Green (RoHS & no Sb/Br)	CU NIPDAU	Level-1-260C-UNLIM
SN75C1168DBRE4	ACTIVE	SSOP	DB	16	2000	Green (RoHS & no Sb/Br)	CU NIPDAU	Level-1-260C-UNLIM
SN75C1168N	ACTIVE	PDIP	N	16	25	Pb-Free (RoHS)	CU NIPDAU	N / A for Pkg Type
SN75C1168NE4	ACTIVE	PDIP	N	16	25	Pb-Free (RoHS)	CU NIPDAU	N / A for Pkg Type
SN75C1168NSLE	OBSOLETE	SO	NS	16		TBD	Call TI	Call TI
SN75C1168NSR	ACTIVE	SO	NS	16	2000	Green (RoHS & no Sb/Br)	CU NIPDAU	Level-1-260C-UNLIM
SN75C1168NSRE4	ACTIVE	SO	NS	16	2000	Green (RoHS & no Sb/Br)	CU NIPDAU	Level-1-260C-UNLIM
SN75C1168NSRG4	ACTIVE	SO	NS	16	2000	Green (RoHS & no Sb/Br)	CU NIPDAU	Level-1-260C-UNLIM

Orderable Device	Status [1]	Package Type	Package Drawing	Pins	Package Qty	Eco Plan [2]	Lead/Ball Finish	MSL Peak Temp [3]
SN75C1168PW	ACTIVE	TSSOP	PW	16	90	Green (RoHS & no Sb/Br)	CU NIPDAU	Level-1-260C-UNLIM
SN75C1168PWE4	ACTIVE	TSSOP	PW	16	90	Green (RoHS & no Sb/Br)	CU NIPDAU	Level-1-260C-UNLIM
SN75C1168PWR	ACTIVE	TSSOP	PW	16	2000	Green (RoHS & no Sb/Br)	CU NIPDAU	Level-1-260C-UNLIM
SN75C1168PWRE4	ACTIVE	TSSOP	PW	16	2000	Green (RoHS & no Sb/Br)	CU NIPDAU	Level-1-260C-UNLIM

[1] The marketing status values are defined as follows:
ACTIVE: Product device recommended for new designs.
LIFEBUY: TI has announced that the device will be discontinued, and a lifetime-buy period is in effect.
NRND: Not recommended for new designs. Device is in production to support existing customers, but TI does not recommend using this part in a new design.
PREVIEW: Device has been announced but is not in production. Samples may or may not be available.
OBSOLETE: TI has discontinued the production of the device.

[2] Eco Plan - The planned eco-friendly classification: Pb-Free (RoHS), Pb-Free (RoHS Exempt), or Green (RoHS & no Sb/Br) - please check http://www.ti.com/productcontent for the latest availability information and additional product content details.
TBD: The Pb-Free/Green conversion plan has not been defined.
Pb-Free (RoHS): TI's terms "Lead-Free" or "Pb-Free" mean semiconductor products that are compatible with the current RoHS requirements for all 6 substances, including the requirement that lead not exceed 0.1% by weight in homogeneous materials. Where designed to be soldered at high temperatures, TI Pb-Free products are suitable for use in specified lead-free processes.
Pb-Free (RoHS Exempt): This component has a RoHS exemption for either 1) lead-based flip-chip solder bumps used between the die and package, or 2) lead-based die adhesive used between the die and leadframe. The component is otherwise considered Pb-Free (RoHS compatible) as defined above.
Green (RoHS & no Sb/Br): TI defines "Green" to mean Pb-Free (RoHS compatible), and free of Bromine (Br) and Antimony (Sb) based flame retardants (Br or Sb do not exceed 0.1% by weight in homogeneous material)

[3] MSL, Peak Temp. -- The Moisture Sensitivity Level rating according to the JEDEC industry standard classifications, and peak solder temperature.

Important Information and Disclaimer: The information provided on this page represents TI's knowledge and belief as of the date that it is provided. TI bases its knowledge and belief on information provided by third parties, and makes no representation or warranty as to the accuracy of such information. Efforts are underway to better integrate information from third parties. TI has taken and continues to take reasonable steps to provide representative and accurate information but may not have conducted destructive testing or chemical analysis on incoming materials and chemicals. TI and TI suppliers consider certain information to be proprietary, and thus CAS numbers and other limited information may not be available for release.

In no event shall TI's liability arising out of such information exceed the total purchase price of the TI part(s) at issue in this document sold by TI to Customer on an annual basis.

N (R–PDIP–T**)

PLASTIC DUAL–IN–LINE PACKAGE

16 PINS SHOWN

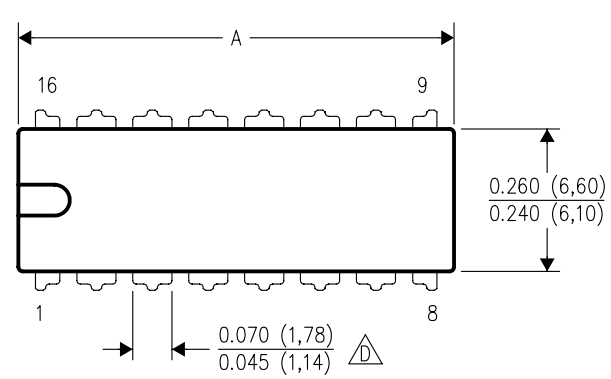

DIM \ PINS **	14	16	18	20
A MAX	0.775 (19,69)	0.775 (19,69)	0.920 (23,37)	1.060 (26,92)
A MIN	0.745 (18,92)	0.745 (18,92)	0.850 (21,59)	0.940 (23,88)
MS–001 VARIATION (C)	AA	BB	AC	AD

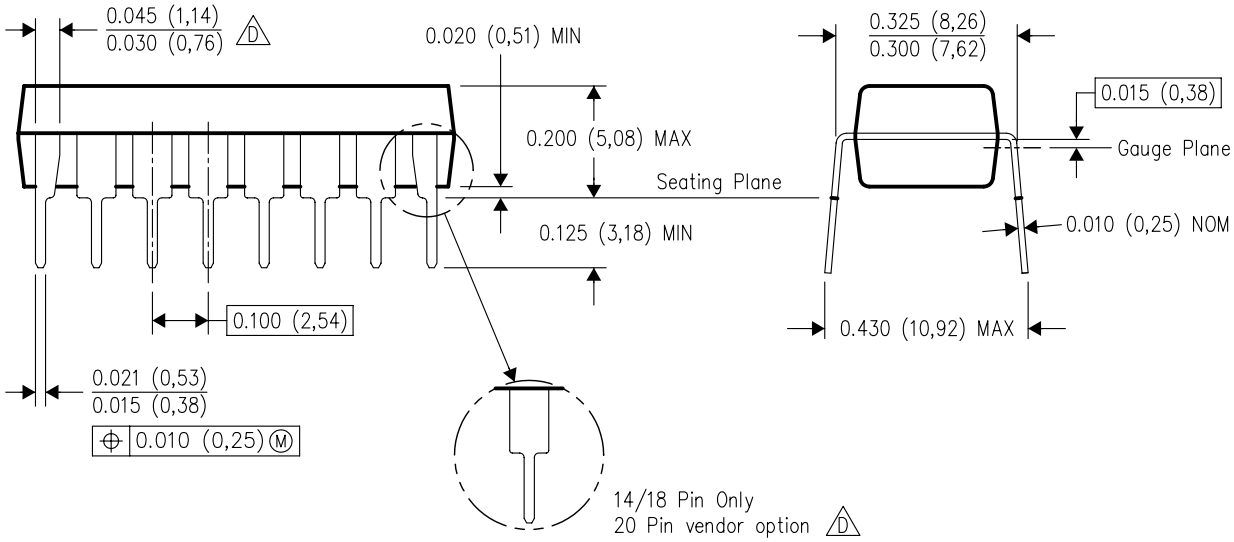

4040049/E 12/2002

NOTES:
A. All linear dimensions are in inches (millimeters).
B. This drawing is subject to change without notice.
C. Falls within JEDEC MS–001, except 18 and 20 pin minimum body length (Dim A).
D. The 20 pin end lead shoulder width is a vendor option, either half or full width.

MECHANICAL DATA

NS (R-PDSO-G)** **PLASTIC SMALL-OUTLINE PACKAGE**

14-PINS SHOWN

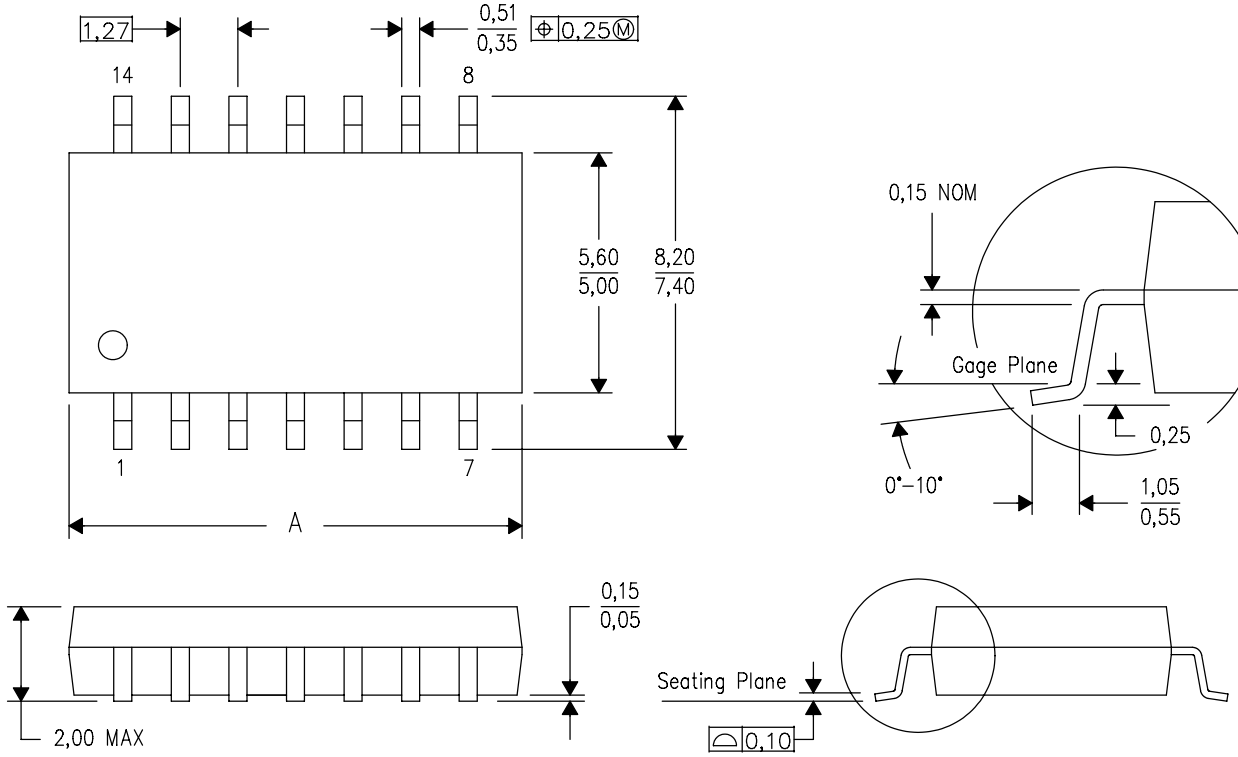

DIM \ PINS **	14	16	20	24
A MAX	10,50	10,50	12,90	15,30
A MIN	9,90	9,90	12,30	14,70

4040062/C 03/03

NOTES:
A. All linear dimensions are in millimeters.
B. This drawing is subject to change without notice.
C. Body dimensions do not include mold flash or protrusion, not to exceed 0,15.

MSSO002E – JANUARY 1995 – REVISED DECEMBER 2001

DB (R-PDSO-G)** **PLASTIC SMALL-OUTLINE**

28 PINS SHOWN

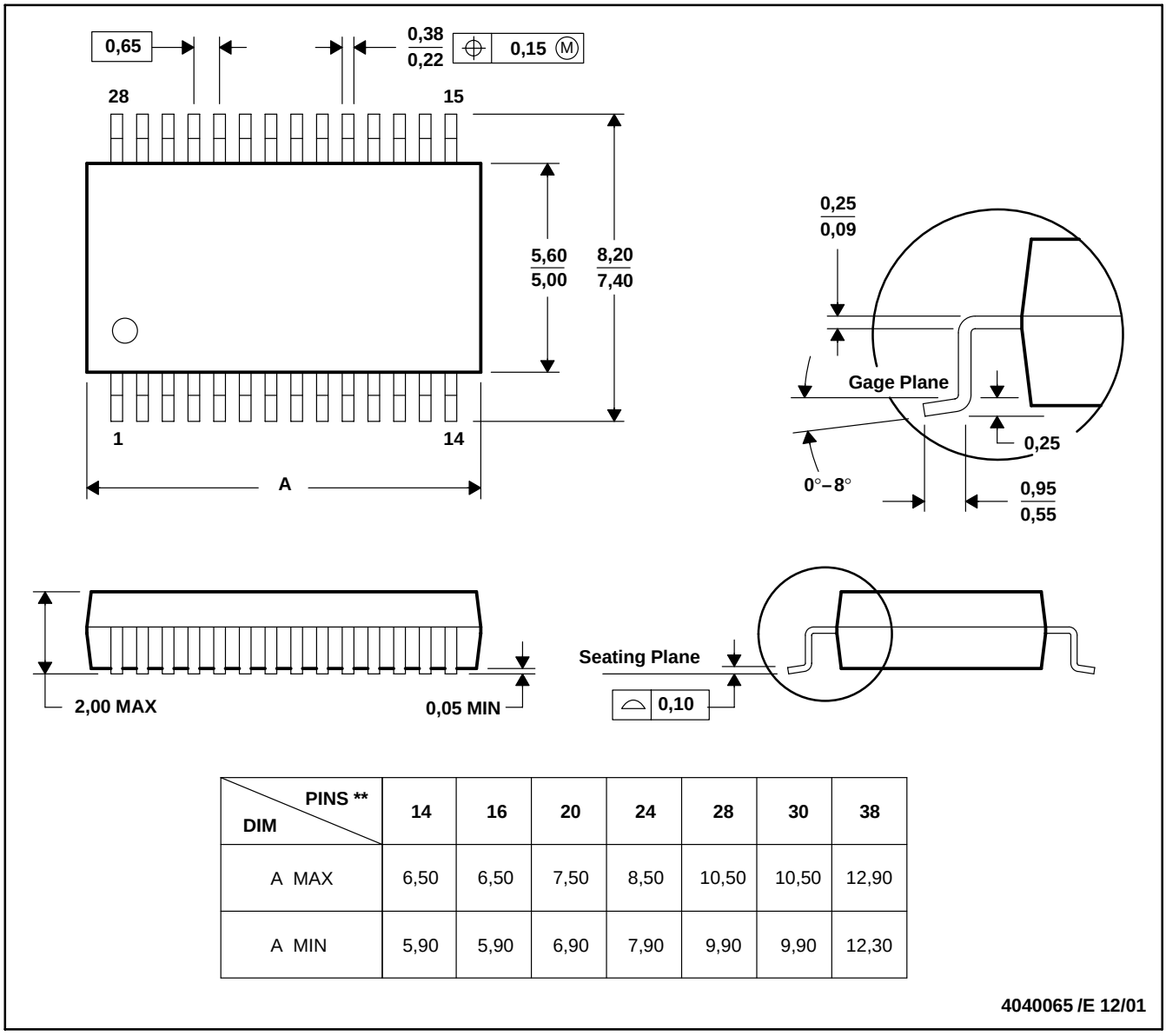

DIM \ PINS **	14	16	20	24	28	30	38
A MAX	6,50	6,50	7,50	8,50	10,50	10,50	12,90
A MIN	5,90	5,90	6,90	7,90	9,90	9,90	12,30

4040065 /E 12/01

NOTES: A. All linear dimensions are in millimeters.
B. This drawing is subject to change without notice.
C. Body dimensions do not include mold flash or protrusion not to exceed 0,15.
D. Falls within JEDEC MO-150

PW (R-PDSO-G)** **PLASTIC SMALL-OUTLINE PACKAGE**

14 PINS SHOWN

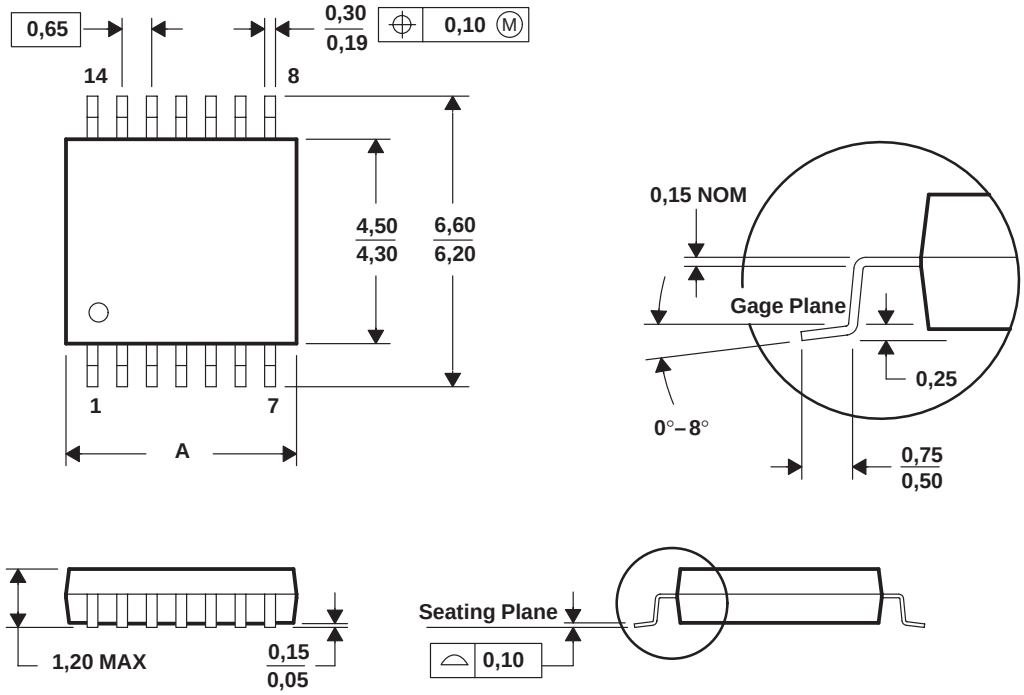

DIM \ PINS **	8	14	16	20	24	28
A MAX	3,10	5,10	5,10	6,60	7,90	9,80
A MIN	2,90	4,90	4,90	6,40	7,70	9,60

4040064/F 01/97

NOTES: A. All linear dimensions are in millimeters.
B. This drawing is subject to change without notice.
C. Body dimensions do not include mold flash or protrusion not to exceed 0,15.
D. Falls within JEDEC MO-153

IMPORTANT NOTICE

Texas Instruments Incorporated and its subsidiaries (TI) reserve the right to make corrections, modifications, enhancements, improvements, and other changes to its products and services at any time and to discontinue any product or service without notice. Customers should obtain the latest relevant information before placing orders and should verify that such information is current and complete. All products are sold subject to TI's terms and conditions of sale supplied at the time of order acknowledgment.

TI warrants performance of its hardware products to the specifications applicable at the time of sale in accordance with TI's standard warranty. Testing and other quality control techniques are used to the extent TI deems necessary to support this warranty. Except where mandated by government requirements, testing of all parameters of each product is not necessarily performed.

TI assumes no liability for applications assistance or customer product design. Customers are responsible for their products and applications using TI components. To minimize the risks associated with customer products and applications, customers should provide adequate design and operating safeguards.

TI does not warrant or represent that any license, either express or implied, is granted under any TI patent right, copyright, mask work right, or other TI intellectual property right relating to any combination, machine, or process in which TI products or services are used. Information published by TI regarding third-party products or services does not constitute a license from TI to use such products or services or a warranty or endorsement thereof. Use of such information may require a license from a third party under the patents or other intellectual property of the third party, or a license from TI under the patents or other intellectual property of TI.

Reproduction of information in TI data books or data sheets is permissible only if reproduction is without alteration and is accompanied by all associated warranties, conditions, limitations, and notices. Reproduction of this information with alteration is an unfair and deceptive business practice. TI is not responsible or liable for such altered documentation.

Resale of TI products or services with statements different from or beyond the parameters stated by TI for that product or service voids all express and any implied warranties for the associated TI product or service and is an unfair and deceptive business practice. TI is not responsible or liable for any such statements.

Following are URLs where you can obtain information on other Texas Instruments products and application solutions:

Products		**Applications**	
Amplifiers	amplifier.ti.com	Audio	www.ti.com/audio
Data Converters	dataconverter.ti.com	Automotive	www.ti.com/automotive
DSP	dsp.ti.com	Broadband	www.ti.com/broadband
Interface	interface.ti.com	Digital Control	www.ti.com/digitalcontrol
Logic	logic.ti.com	Military	www.ti.com/military
Power Mgmt	power.ti.com	Optical Networking	www.ti.com/opticalnetwork
Microcontrollers	microcontroller.ti.com	Security	www.ti.com/security
Low Power Wireless	www.ti.com/lpw	Telephony	www.ti.com/telephony
		Video & Imaging	www.ti.com/video
		Wireless	www.ti.com/wireless

Mailing Address: Texas Instruments
Post Office Box 655303 Dallas, Texas 75265

Copyright © 2006, Texas Instruments Incorporated