molex
one company > a world of innovation

This document was generated on 05/31/2010

PLEASE CHECK WWW.MOLEX.COM FOR LATEST PART INFORMATION

Part Number: 0759001432
Status: Active
Overview: mx150_unshrouded_breakaway_header
Description: 3.50mm (.138") Pitch, MX150™ Dual Row Header, Breakaway, Right Angle, 6 Circuits, 1.25µm (50µ") Nickel (Ni) Overall, 1.50µm (60µ") Minimum Select Matte Tin (Sn) Plating Overall, 4.75mm (.187") PC Tail Length

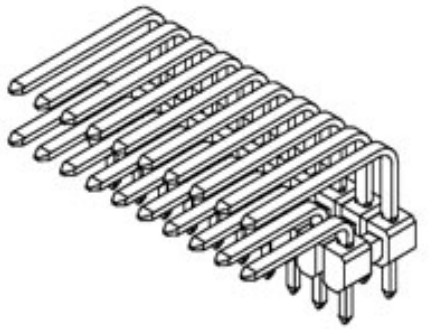

Series image - Reference only

Documents:

- Drawing (PDF)
- 3D Model
- Application Specification (PDF)
- Packaging Specification (PDF)
- Product Specification PS-75757-000 (PDF)
- RoHS Certificate of Compliance (PDF)

General

Product Family	PCB Headers
Series	75900
Application	Wire-to-Board
Overview	mx150_unshrouded_breakaway_header
Product Name	MX150™

Physical

Breakaway	Yes
Circuits (Loaded)	6
Circuits (maximum)	6
Circuits Detail	6
Color - Resin	Black
Durability (mating cycles max)	25
First Mate / Last Break	No
Glow-Wire Compliant	No
Guide to Mating Part	No
Keying to Mating Part	None
Lock to Mating Part	None
Material - Metal	Brass
Material - Plating Mating	Tin
Material - Plating Termination	Tin
Material - Resin	High Temperature Thermoplastic
Number of Rows	2
Orientation	Right Angle
PC Tail Length (in)	0.190 In
PC Tail Length (mm)	4.75 mm
PCB Locator	No
PCB Retention	None
PCB Thickness Recommended (in)	0.093 In
PCB Thickness Recommended (mm)	2.36 mm
Packaging Type	Tube
Pitch - Mating Interface (in)	0.138 In
Pitch - Mating Interface (mm)	3.50 mm
Pitch - Term. Interface (in)	0.138 In
Pitch - Term. Interface (mm)	3.50 mm
Plating min: Mating (µin)	50
Plating min: Mating (µm)	1.25
Plating min: Termination (µin)	60
Plating min: Termination (µm)	1.50
Polarized to Mating Part	No
Polarized to PCB	No
Shrouded	No
Stackable	No

EU RoHS
ELV and RoHS Compliant
REACH SVHC
Not Reviewed
Halogen-Free Status
Not Reviewed

China RoHS

Need more information on product environmental compliance?

Email productcompliance@molex.com
For a multiple part number RoHS Certificate of Compliance, click here

Please visit the Contact Us section for any non-product compliance questions.

Search Parts in this Series
75900Series

Use With
MX150 ™ Receptacles Dual Row Housings
33472

Surface Mount Compatible (SMC)	Yes
Temperature Range - Operating	-40°C to +125°C
Termination Interface: Style	Through Hole

Electrical

Current - Maximum per Contact	16A
Voltage - Maximum	500V DC

Material Info

Reference - Drawing Numbers

Application Specification	AS-75900-203
Product Specification	PS-75757-000
Sales Drawing	SD-75900-001

This document was generated on 05/31/2010

PLEASE CHECK WWW.MOLEX.COM FOR LATEST PART INFORMATION

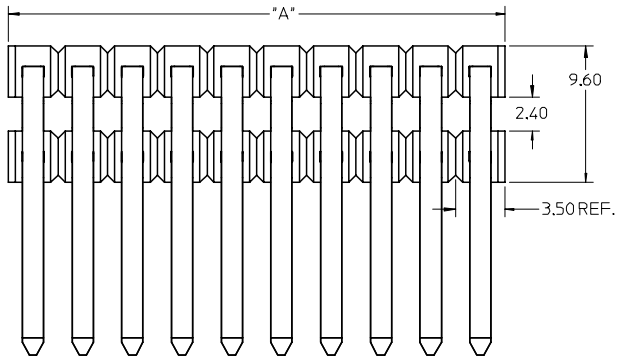

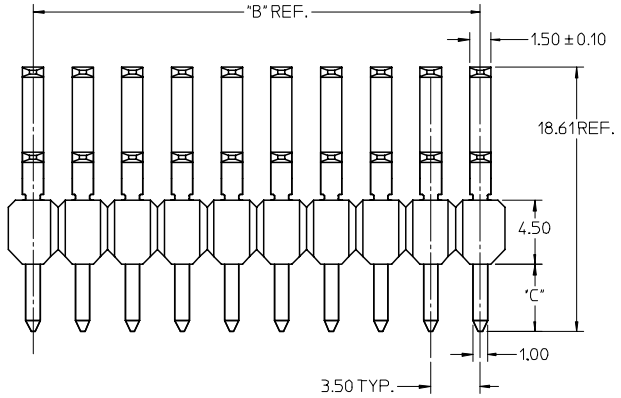

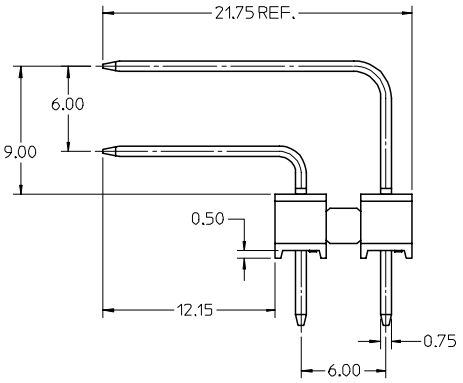

NOTES:
1. TERMINAL MAT'L: ALLOY C26000, CARTRIDGE BRASS
2. WAFER MAT'L: 30% GLASS FILLED LCP, 94V-0, COLOR BLACK.
3. TERMINAL PLATING:
   OPTION 4 - 1.5μm MIN MATTE TIN OVERALL OVER 1.25μm NICKEL OVERALL
   OPTION 1 - 2.5μm MIN MATTE TIN OVERALL OVER 1.25μm NICKEL OVERALL
   OPTION 2 - 1.25μm NICKEL OVERALL 2.5μm MIN SELECT MATTE TIN PC TAIL AREA 0.05-0.25μm SELECT GOLD CONTACT AREA
   OPTION 3 - 1.25μm NICKEL OVERALL 2.5μm MIN SELECT MATTE TIN PC TAIL AREA 0.75μm SELECT GOLD CONTACT AREA
4. HEADER ASSEMBLIES ARE TUBE PACKAGED PER PK-75900-9900.
5. COMPLIES WITH USCAR 1.5mm TERMINAL BLADE SPECIFICATION.

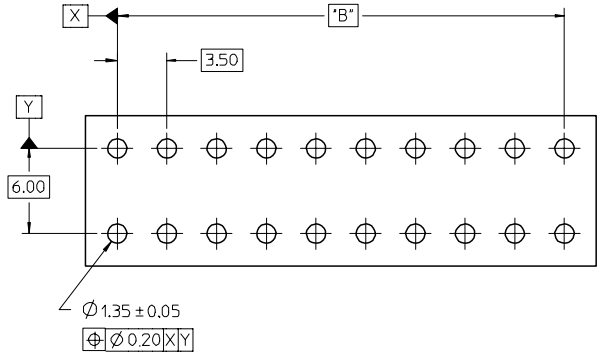

RECOMMEDED PCB LAYOUT

CKT SIZE	PLATING OPTION	MATERIAL NUMBER	"A" DIM	"B" DIM	"C" DIM	MATERIAL NUMBER	"A" DIM	"B" DIM	"C" DIM
2 x 2	1	75900-1121	7.0	3.50 REF	3.05	75900-1122	7.0	3.50 REF	4.75
	2	75900-1221				75900-1222			
	3	75900-1321				75900-1322			
	4	75900-1421				75900-1422			
2 x 3	1	75900-1131	10.5	7.00		75900-1132	10.5	7.00	
	2	75900-1231				75900-1232			
	3	75900-1331				75900-1332			
	4	75900-1431				75900-1432			
2 x 4	1	75900-1141	14.0	10.50		75900-1142	14.0	10.50	
	2	75900-1241				75900-1242			
	3	75900-1341				75900-1342			
	4	75900-1441				75900-1442			
2 x 6	1	75900-1161	21.0	17.50		75900-1162	21.0	17.50	
	2	75900-1261				75900-1262			
	3	75900-1361				75900-1362			
	4	75900-1461				75900-1462			
2 x 8	1	75900-1181	28.0	24.50		75900-1182	28.0	24.50	
	2	75900-1281				75900-1282			
	3	75900-1381				75900-1382			
	4	75900-1481				75900-1482			
2 x 10	1	75900-1101	35.0	31.50		75900-1102	35.0	31.50	
	2	75900-1201				75900-1202			
	3	75900-1301				75900-1302			
	4	75900-1401				75900-1402			

PRELIM RELEASE
EC NO: UCP2006-2758 2007/01/17
DRWN: JLSWENSON 2007/01/17
CH'KD: 2007/01/18
APPR: MBANAKIS
DESCRIPTION
REV 2

QUALITY SYMBOLS
▼=0
▽=0

GENERAL TOLERANCES (UNLESS SPECIFIED)

	mm	INCH
4 PLACES	± ---	± ---
3 PLACES	± ---	± ---
2 PLACES	± 0.13	± ---
1 PLACE	± 0.25	± ---
ANGULAR ±1/2°		

DRAFT WHERE APPLICABLE MUST REMAIN WITHIN DIMENSIONS

DIMENSION STYLE: MM ONLY
SCALE: 4:1
DESIGN UNITS: METRIC
THIRD ANGLE PROJECTION

		DATE
DRAWN BY	TMCCLELL	1/25/06
CHECKED BY	TMCCLELL	1/25/06
APPROVED BY	BANAKIS	1/25/06

TITLE: MX150 RIGHT ANGLE DUAL ROW BREAK-AWAY HEADER ASSEMBLY

MOLEX INCORPORATED

MATERIAL NO.: SEE CHART
DOCUMENT NO.: SD-75900-001
SHEET NO.: 1 OF 1
SIZE: C

THIS DRAWING CONTAINS INFORMATION THAT IS PROPRIETARY TO MOLEX INCORPORATED AND SHOULD NOT BE USED WITHOUT WRITTEN PERMISSION