This document was generated on 05/13/2010

PLEASE CHECK WWW.MOLEX.COM FOR LATEST PART INFORMATION

Part Number: 0753416476
Status: Active
Overview: gbx_backplane_connector_system
Description: 1.85mm by 1.85mm (.073 by .073") Pitch 4-Pair GbX® Backplane Connector System, Power Module, 12 Circuits, 1.27µm (50µ") Gold (Au)

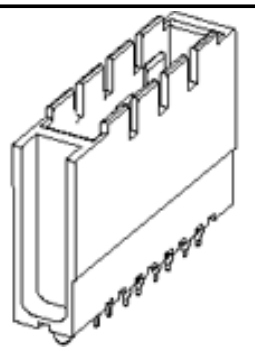

Series image - Reference only

Documents:
Drawing (PDF)
RoHS Certificate of Compliance (PDF)
Product Specification PS-75221-999 (PDF)

Agency Certification

UL	E29179

General

Product Family	Backplane Connectors
Series	75341
Application	Backplane
Application Tooling Documents	Tooling Manual
Comments	Blade Length A 6.00mm, B 4.50mm, C 7.50mm, D 6.00mm
Component Type	Power Header
Overview	gbx_backplane_connector_system
Product Name	GbX®
Style	N/A

Physical

Circuits (Loaded)	8
Circuits (maximum)	8
Circuits Detail	Rows A, B, C, & D
Color - Resin	Gray
Durability (mating cycles max)	200
First Mate / Last Break	Yes
Flammability	94V-0
Guide to Mating Part	No
Keying to Mating Part	None
Material - Plating Mating	Gold
Material - Plating Termination	Tin-Lead
Material - Resin	High Temperature Thermoplastic
Number of Columns	N/A
Number of Pairs	4
Number of Rows	4
Orientation	Vertical
PC Tail Length (in)	0.089 In
PC Tail Length (mm)	2.28 mm
PCB Locator	Yes
PCB Retention	Yes
PCB Thickness Recommended (in)	0.063 In
PCB Thickness Recommended (mm)	1.60 mm
Packaging Type	Tube
Pitch - Mating Interface (in)	0.073 In
Pitch - Mating Interface (mm)	1.85 mm
Pitch - Term. Interface (in)	0.102 In
Pitch - Term. Interface (mm)	2.60 mm
Plating min: Mating (µin)	50
Plating min: Mating (µm)	1.25

EU RoHS
RoHS Compliant by Exemption
REACH SVHC
Not Reviewed
Halogen-Free Status
Not Reviewed

China RoHS

Need more information on product environmental compliance?

Email productcompliance@molex.com
For a multiple part number RoHS Certificate of Compliance, click here

Please visit the Contact Us section for any non-product compliance questions.

Search Parts in this Series
75341Series

Mates With
75292 GbX® Daughtercard

Application Tooling | **FAQ**
Tooling specifications and manuals are found by selecting the products below. Crimp Height Specifications are then contained in the Application Tooling Specification document.
Global

Description	Product #
Insertion Module, GbX® 4 pair 1- Up Power Module	0622022005
GbX® Single Pin Repair Tool	0622022090
GbX® Shield Removal Tool	0622022100

Plating min: Termination (µin)	30
Plating min: Termination (µm)	0.75
Polarized to PCB	Yes
Stackable	No
Surface Mount Compatible (SMC)	Yes
Temperature Range - Operating	-55°C to +105°C
Termination Interface: Style	Through Hole - Compliant Pin

Electrical

Current - Maximum per Contact	6A
Data Rate	8.0 Gbps
Real Signals (per 25mm)	0
Shielded	No
Voltage - Maximum	120V AC (RMS)/DC

Material Info

Reference - Drawing Numbers

Product Specification	PS-75221-999
Sales Drawing	SD-75341-001

GbX is a registered trademark of Amphenol Corporation.

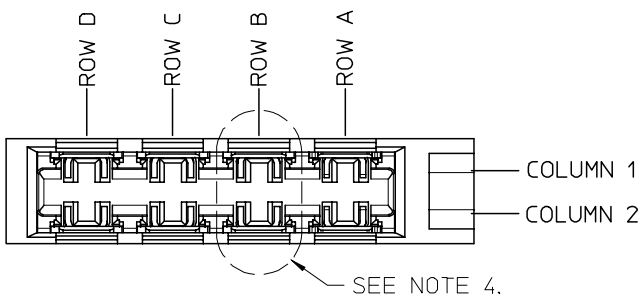

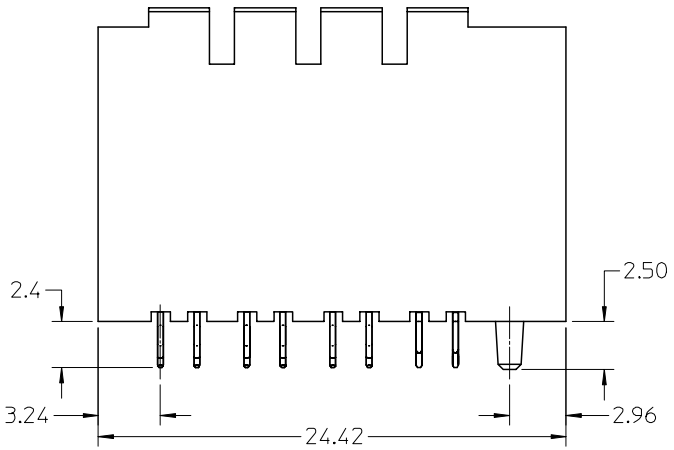

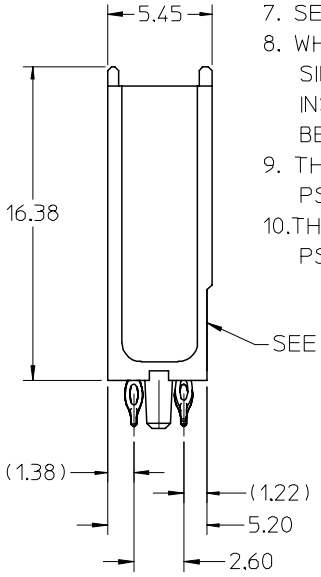

NOTES:
1. MATERIALS: HOUSING - LIQUID CRYSTAL POLYMER (LCP), UL 94V-0, GRAY; CONTACT - COPPER ALLOY.
2. FINISH: SELECT GOLD IN CONTACT AREA, 50 μ" THICK; TIN/LEAD OR MATTE TIN IN COMPLIANT AREA.
3. PACKAGING PER PK-70873-562.
4. CONTACTS IN EACH ROW HAVE THE SAME WIPE LENGTH.
5. BACKPLANE ASSEMBLY MATES WITH DAUGHTERCARD POWER MODULE 75292-4***.
6. PART SHOWN IS 75343-4467 (SHEET 4).
7. SEE OTHER SHEETS FOR ADDITIONAL NOTES.
8. WHEN INSERTING OPEN SIGNAL MODULES NEXT TO COLUMN 1 SIDE OF POWER MODULES, SIGNAL MODULES MUST BE INSERTED BEFORE THE POWERS TO AVOID INTERFERENCE BETWEEN THE TWO CONNECTOR HOUSINGS.
9. THESE PARTS CONFORM TO MOLEX PRODUCT SPECIFICATION PS-75221-999.
10. THESE PARTS CONFORM TO MOLEX COSMETIC SPECIFICATION PS-45499-002 CLASS B.

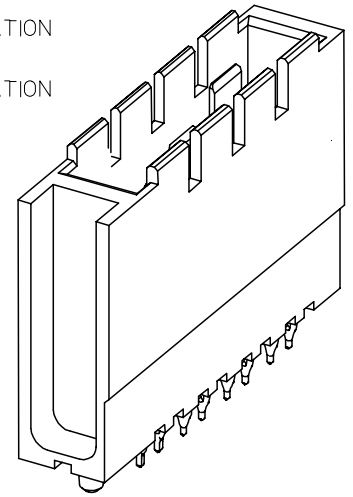

1-UP ASSEMBLY PART NUMBER

7 5 3 4 1 - A B C D

- TIN/LEAD PLATED PRODUCT -

FOR EACH ROW LOCATION A, B, C, D:
- 0 = VOID
- 4 = 4.5 mm WIPE
- 6 = 6.0 mm WIPE
- 7 = 7.5 mm WIPE

- LEAD-FREE PLATED PRODUCT -

FOR EACH ROW LOCATION A, B, C, D:
- 0 = VOID
- 2 = 4.5 mm WIPE
- 3 = 6.0 mm WIPE
- 5 = 7.5 mm WIPE

REV	DESCRIPTION	
C	ADDED NOTES 9 & 10 EC NO: UCP2008-0426	2007/08/29
	DRWN: CSTEWART	2007/08/30
	CHKD:	
	APPR: JBINGHAM	2007/08/31

QUALITY SYMBOLS: ▼=0, ▽=0

GENERAL TOLERANCES (UNLESS SPECIFIED)

	mm	INCH
4 PLACES	± ---	± ---
3 PLACES	± ---	± ---
2 PLACES	± ---	± ---
1 PLACE	± ---	± ---
ANGULAR ±---°		

DRAFT WHERE APPLICABLE MUST REMAIN WITHIN DIMENSIONS

DIMENSION STYLE	MM ONLY
SCALE	4:1
DESIGN UNITS	METRIC
	THIRD ANGLE PROJECTION
DRAWN BY / DATE	ELO 2006/04/06
CHECKED BY / DATE	ELO 2005/02/22
APPROVED BY / DATE	CUNNINGHAM 2005/02/23
MATERIAL NO.	SEE CHART
TITLE	GBX 4 PAIR BACKPLANE POWER SALES ASSEMBLY
	MOLEX INCORPORATED
DOCUMENT NO.	SD-75341-001
SHEET NO.	1 OF 4
SIZE	B

THIS DRAWING CONTAINS INFORMATION THAT IS PROPRIETARY TO MOLEX INCORPORATED AND SHOULD NOT BE USED WITHOUT WRITTEN PERMISSION

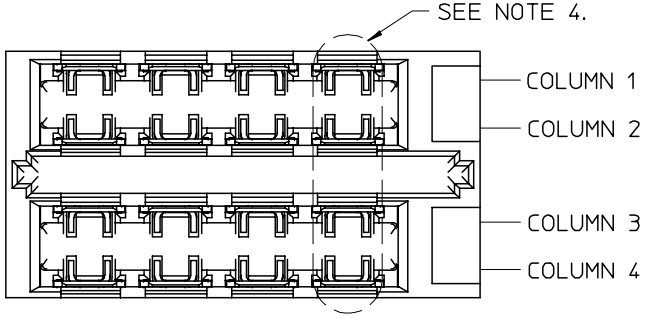

2-UP ASSEMBLY PART NUMBER

7 5 3 4 2 - A B C D

- TIN/LEAD PLATED PRODUCT -

FOR EACH ROW LOCATION A, B, C, D:

0 = VOID
4 = 4.5 mm WIPE
6 = 6.0 mm WIPE
7 = 7.5 mm WIPE

- LEAD-FREE PLATED PRODUCT -

FOR EACH ROW LOCATION A, B, C, D:

0 = VOID
2 = 4.5 mm WIPE
3 = 6.0 mm WIPE
5 = 7.5 mm WIPE

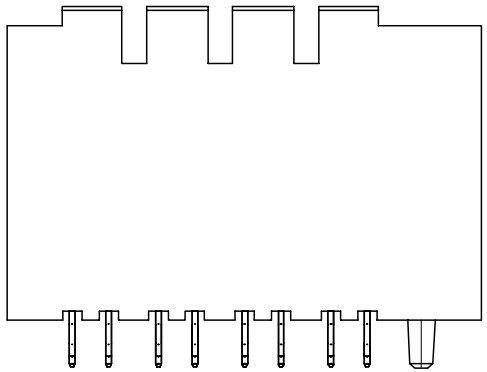

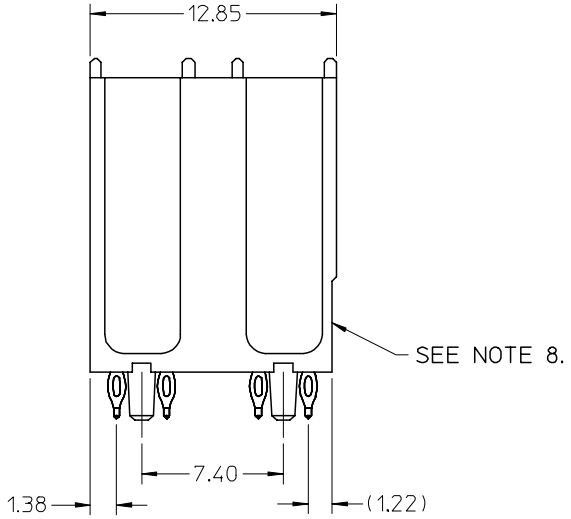

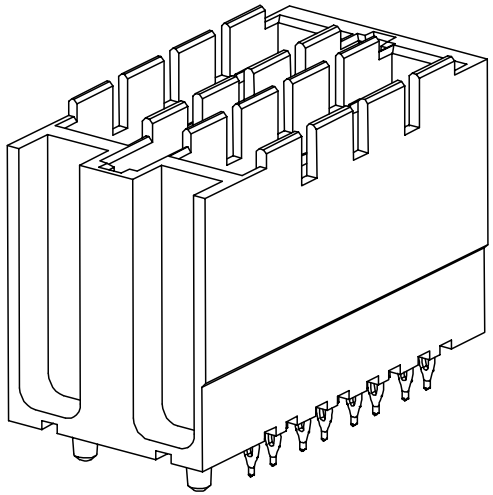

SEE SHEET 1 FOR ADDITIONAL INFORMATION
CHECK WITH PRODUCT MANAGER FOR AVAILABILITY

SEE SHEET ONE EC NO: UCP2008-0426 DRWN: CSTEWART 2007/08/29 CH'KD: 2007/08/30 APPR: JBINGHAM 2007/08/31	DESCRIPTION	QUALITY SYMBOLS ▼=0 ▽=0	GENERAL TOLERANCES (UNLESS SPECIFIED) mm / INCH 4 PLACES ± --- / ± --- 3 PLACES ± --- / ± --- 2 PLACES ± --- / ± --- 1 PLACE ± --- / ± --- ANGULAR ±---° DRAFT WHERE APPLICABLE MUST REMAIN WITHIN DIMENSIONS	DIMENSION STYLE: MM ONLY DRAWN BY: ELO DATE: 2006/04/06 CHECKED BY: ELO DATE: 2005/02/22 APPROVED BY: CUNNINGHAM DATE: 2005/02/23 MATERIAL NO.: SEE CHART	SCALE: 4:1 DESIGN UNITS: METRIC THIRD ANGLE PROJECTION TITLE: GBX 4 PAIR BACKPLANE POWER SALES ASSEMBLY molex MOLEX INCORPORATED DOCUMENT NO.: SD-75341-001 SHEET NO.: 2 OF 4	REV	

SIZE B

THIS DRAWING CONTAINS INFORMATION THAT IS PROPRIETARY TO MOLEX INCORPORATED AND SHOULD NOT BE USED WITHOUT WRITTEN PERMISSION

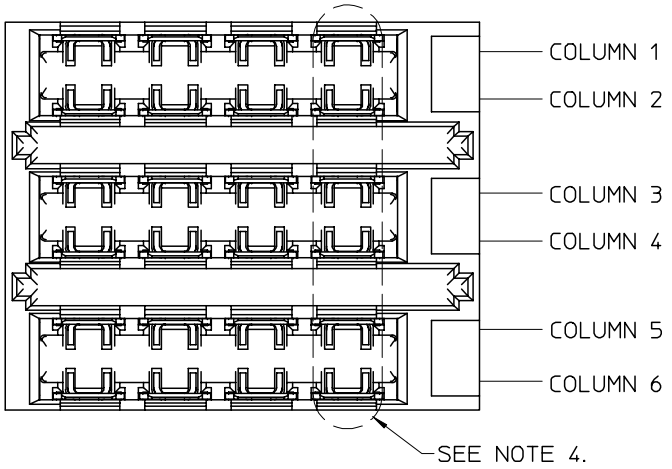

3-UP ASSEMBLY PART NUMBER

7 5 3 4 3 - A B C D

- TIN/LEAD PLATED PRODUCT -

FOR EACH ROW LOCATION A, B, C, D:

0 = VOID
4 = 4.5 mm WIPE
6 = 6.0 mm WIPE
7 = 7.5 mm WIPE

- LEAD-FREE PLATED PRODUCT -

FOR EACH ROW LOCATION A, B, C, D:

0 = VOID
2 = 4.5 mm WIPE
3 = 6.0 mm WIPE
5 = 7.5 mm WIPE

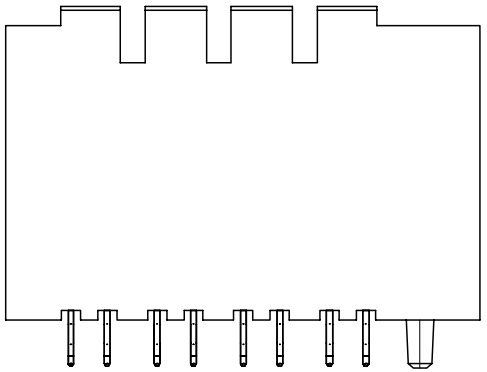

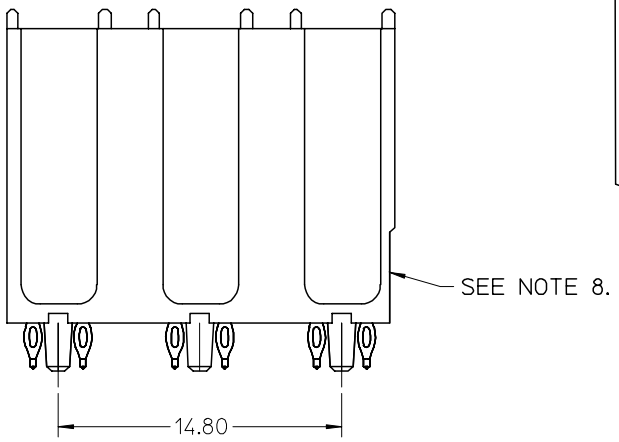

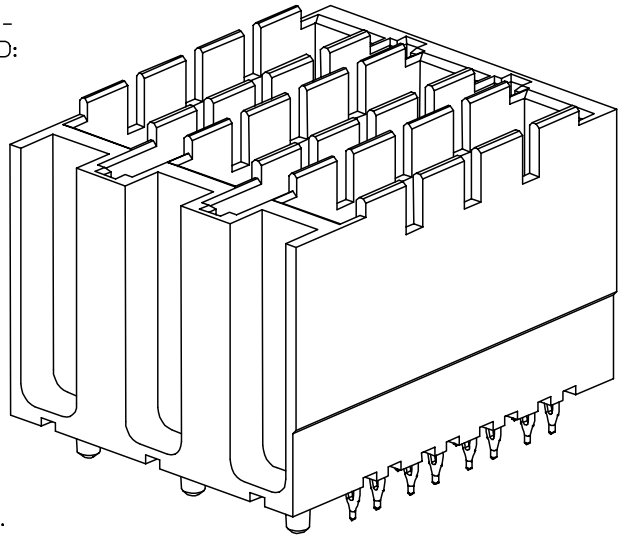

SEE SHEET 1 FOR ADDITIONAL INFORMATION
CHECK WITH PRODUCT MANAGER FOR AVAILABILITY

SEE SHEET ONE
EC NO: UCP2008-0426 2007/08/29
DRWN: CSTEWART 2007/08/30
CH'KD: APPR: JBINGHAM 2007/08/31
DESCRIPTION
REV

QUALITY SYMBOLS
▼=0
▽=0

GENERAL TOLERANCES (UNLESS SPECIFIED)

	mm	INCH
4 PLACES	± ---	± ---
3 PLACES	± ---	± ---
2 PLACES	± ---	± ---
1 PLACE	± ---	± ---
ANGULAR ±---°		

DRAFT WHERE APPLICABLE MUST REMAIN WITHIN DIMENSIONS

DIMENSION STYLE: MM ONLY
SCALE: 4:1
DESIGN UNITS: METRIC
THIRD ANGLE PROJECTION

DRAWN BY: ELO DATE: 2006/04/06
CHECKED BY: ELO DATE: 2005/02/22
APPROVED BY: CUNNINGHAM DATE: 2005/02/23

TITLE: GBX 4 PAIR BACKPLANE POWER SALES ASSEMBLY

MOLEX INCORPORATED

MATERIAL NO.: SEE CHART
DOCUMENT NO.: SD-75341-001
SHEET NO.: 3 OF 4

SIZE: B

THIS DRAWING CONTAINS INFORMATION THAT IS PROPRIETARY TO MOLEX INCORPORATED AND SHOULD NOT BE USED WITHOUT WRITTEN PERMISSION

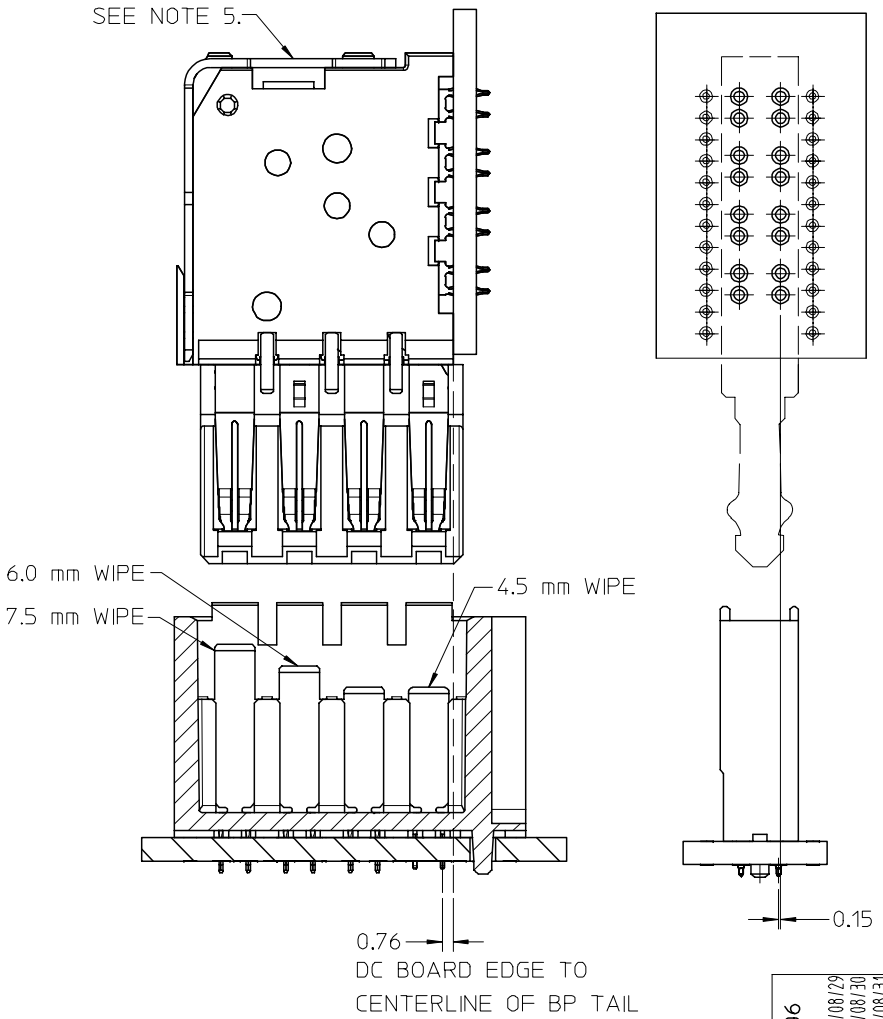

HOLE PATTERN FOR 1-UP ASSEMBLY

1.) ADD 7.40 FROM CENTERLINES OF PEGS FOR MULTIPLE UP ASSEMBLIES.
2.) ADD 5.55 FROM CENTERLINE TO CENTERLINE OF PEG
FOR INDIVIDUAL POWER MODULES STACKED NEXT
TO EACH OTHER.

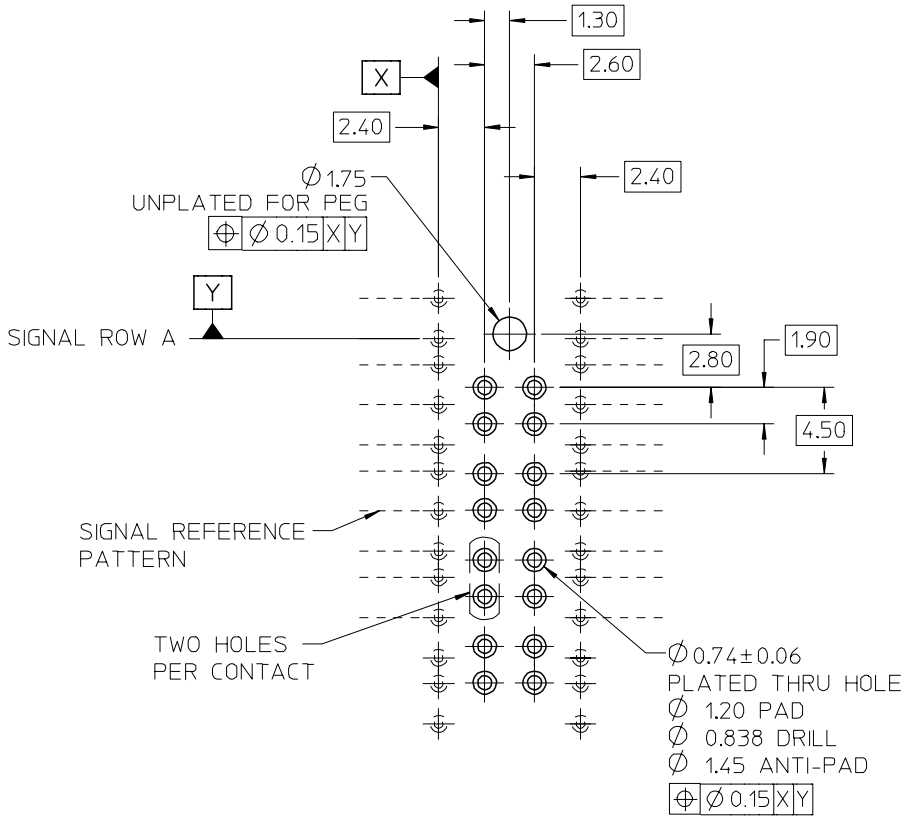

ADDED Ø0.74±0.06 2007/08/29
EC NO: UCP2008-0426 2007/08/30
DRWN: CSTEWART 2007/08/31
CH'KD:
APPR: JB INGHAM
DESCRIPTION
REV

QUALITY SYMBOLS
▼=0
▽=0

GENERAL TOLERANCES (UNLESS SPECIFIED)

	mm	INCH
4 PLACES	± ---	± ---
3 PLACES	± ---	± ---
2 PLACES	± ---	± ---
1 PLACE	± ---	± ---
ANGULAR ±---°		

DRAFT WHERE APPLICABLE MUST REMAIN WITHIN DIMENSIONS

DIMENSION STYLE: MM ONLY
SCALE: 4:1
DESIGN UNITS: METRIC
THIRD ANGLE PROJECTION

		DATE
DRAWN BY	ELO	2006/04/06
CHECKED BY	ELO	2005/02/22
APPROVED BY	CUNNINGHAM	2005/02/23

TITLE: GBX 4 PAIR BACKPLANE POWER SALES ASSEMBLY

MOLEX INCORPORATED

MATERIAL NO.: SEE PREVIOUS
DOCUMENT NO.: SD-75341-001
SHEET NO.: 4 OF 4
SIZE: B

THIS DRAWING CONTAINS INFORMATION THAT IS PROPRIETARY TO MOLEX INCORPORATED AND SHOULD NOT BE USED WITHOUT WRITTEN PERMISSION