molex
one company > a world of innovation

This document was generated on 05/28/2010

PLEASE CHECK WWW.MOLEX.COM FOR LATEST PART INFORMATION

Part Number: 0751971003
Status: Active
Overview: vhdm__hsd
Description: 2.00mm (.079") Pitch VHDM® Lite Board-to-Board Backplane Header, Vertical, 8-Row, Open Signal Module, 80 circuits, Pin Length 4.25mm (.167")

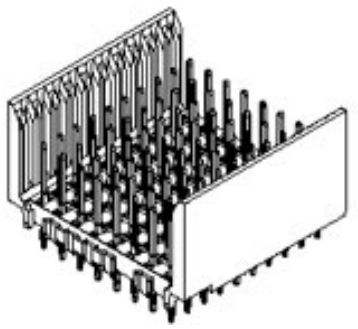

Series image - Reference only

Documents:
Drawing (PDF)
RoHS Certificate of Compliance (PDF)
Product Specification PS-74031-999 (PDF)

General

Product Family	Backplane Connectors
Series	75197
Application	Backplane
Application Tooling Documents	Tooling Manual
Comments	Open Header
Component Type	PCB Header
Overview	vhdm__hsd
Product Name	VHDM Lite®
Style	N/A

Physical

Circuits (Loaded)	80
Circuits (maximum)	80
Color - Resin	Black
Durability (mating cycles max)	200
First Mate / Last Break	No
Guide to Mating Part	No
Keying to Mating Part	None
Material - Metal	High Performance Alloy (HPA)
Material - Plating Mating	Gold
Material - Plating Termination	Tin-Lead
Material - Resin	High Temperature Thermoplastic
Number of Columns	10
Number of Pairs	Open Pin Field
Number of Rows	8
Orientation	Vertical
PCB Retention	Yes
PCB Thickness Recommended (in)	0.070 In
PCB Thickness Recommended (mm)	1.80 mm
Packaging Type	Tube
Pitch - Mating Interface (in)	0.079 In
Pitch - Mating Interface (mm)	2.00 mm
Plating min: Mating (µin)	30
Plating min: Mating (µm)	0.75
Plating min: Termination (µin)	30
Plating min: Termination (µm)	0.75
Polarized to PCB	Yes
Stackable	Yes
Surface Mount Compatible (SMC)	Yes
Temperature Range - Operating	-55°C to +105°C
Termination Interface: Style	Through Hole - Compliant Pin

Electrical

Current - Maximum per Contact	1A

EU RoHS
RoHS Compliant by Exemption
REACH SVHC
Contains SVHC: No
Halogen-Free Status
Not Reviewed

China RoHS
50
Pb

Need more information on product environmental compliance?

Email productcompliance@molex.com
For a multiple part number RoHS Certificate of Compliance, click here

Please visit the Contact Us section for any non-product compliance questions.

Search Parts in this Series
75197Series

Mates With
75191 VHDM® Lite-Series Board-to-Board Daughtercard

Use With
Daughtercard Modules

Application Tooling | **FAQ**
Tooling specifications and manuals are found by selecting the products below. Crimp Height Specifications are then contained in the Application Tooling Specification document.
Global

Description	Product #
VHDM® Signal Pin Inserter Repair Tool	0622015700
VHDM® Insertion Module for Standard Shield Signal Header, 8 Row by	0622020209

Data Rate	622.0 Mbps	10 Wide, 20.00mm (.787")
Real Signals (per 25mm)	72	
Voltage - Maximum	120V AC (RMS)/DC	

Material Info

Reference - Drawing Numbers

Packaging Specification	PK-74060-003
Product Specification	PS-74031-999
Sales Drawing	SD-75197-001

VHDM and Very High Density Metric are trademarks of Amphenol Corporation

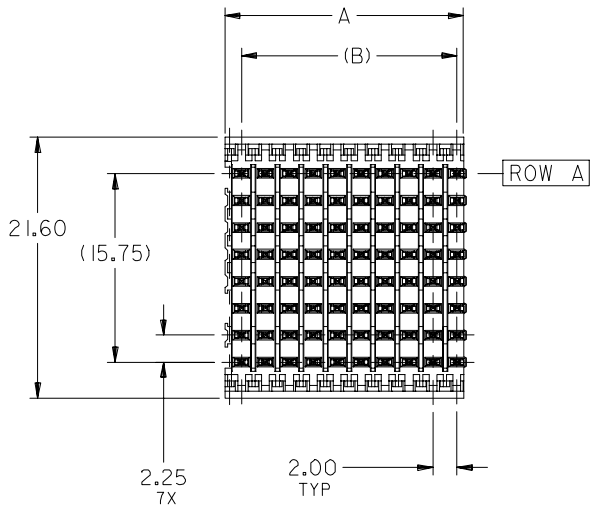

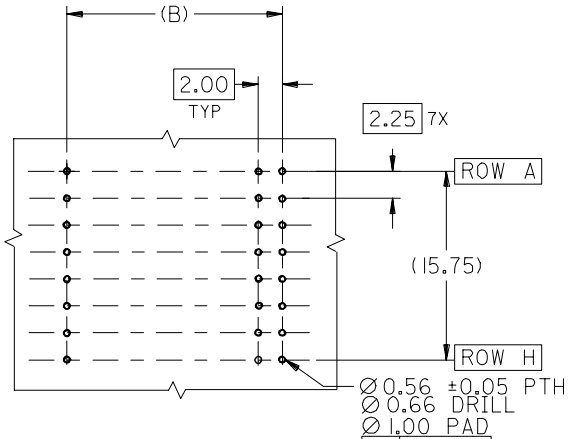

BACKPLANE HOLE PATTERN
RECOMMENDED DIMENSION

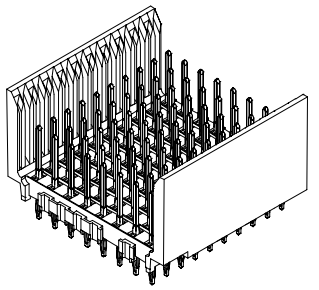

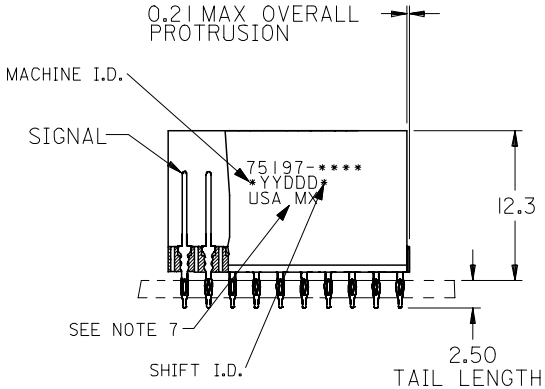

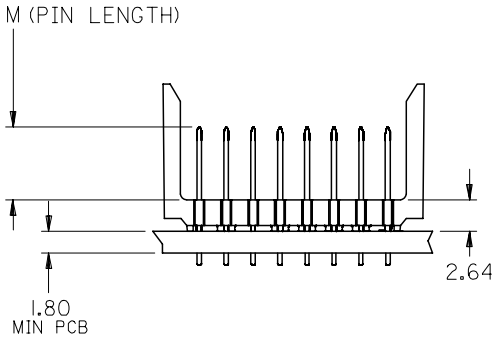

NOTES:
1. MATERIALS:
   HOUSING - LIQUID CRYSTAL POLYMER (LCP), GLASS-FILLED, UL 94V-0, COLOR: BLACK
   SIGNAL PIN - COPPER ALLOY
2. FINISHES:
   CONTACT AREA: SELECTIVE GOLD (Au)
   PCB TAILS: SELECTIVE TIN/LEAD (Sn/Pb) OR SELECTIVE MATTE TIN (Sn)
   NICKEL (Ni) OVERALL
3. THIS PART CONFORMS TO MOLEX PRODUCT SPECIFICATION PS-74031-999
4. FOR MIXED CONTACT LENGTHS CONSULT MOLEX FOR AVAILABILITY
5. FOR SPECIFIC MATERIAL NUMBERS & MATING INFORMATION REFER TO SHEET 2
6. PACKAGE PER PK-74060-003
7. EITHER MARK PART WITH PART NUMBER & DATE CODE APPROXIMATELY WHERE SHOWN OR PLACE LABEL ON THE TUBE.

ADD LEADFREE PNs
EC NO: UCP2006-0059 2005/07/13
DRWN:KMULVEY 2005/07/13
CH'KD: 2005/07/15
APPR:SREED
DESCRIPTION
REV E

QUALITY SYMBOLS
▼=0
▽=0

GENERAL TOLERANCES (UNLESS SPECIFIED)

	mm	INCH
4 PLACES	± ---	± ---
3 PLACES	± ---	± ---
2 PLACES	± ---	± ---
1 PLACE	± ---	± ---
ANGULAR ±1/2°		

DRAFT WHERE APPLICABLE MUST REMAIN WITHIN DIMENSIONS

DIMENSION STYLE: MM ONLY
SCALE: 2.5:1
DESIGN UNITS: METRIC
THIRD ANGLE PROJECTION

		DATE
DRAWN BY	MBANDURA	2002/10/07
CHECKED BY	NMARTIN	2002/10/07
APPROVED BY	CBIXLER	2002/10/07

TITLE: VHDM LITE 8 ROW OPEN END BACKPLANE SALES ASSEMBLY

MOLEX INCORPORATED

MATERIAL NO.: SEE SHEET 2
DOCUMENT NO.: SD-75197-001
SHEET NO.: 1 OF 2
SIZE: B

THIS DRAWING CONTAINS INFORMATION THAT IS PROPRIETARY TO MOLEX INCORPORATED AND SHOULD NOT BE USED WITHOUT WRITTEN PERMISSION

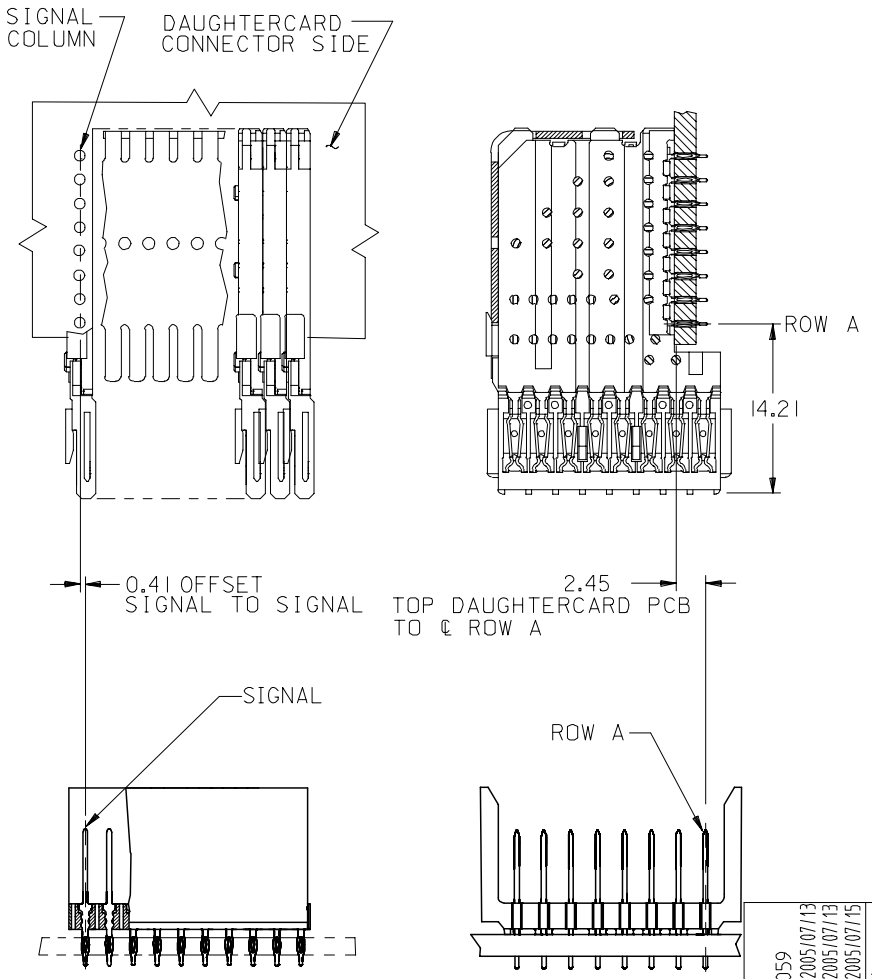

PART NUMBER	COLUMN	NUMBER OF SIGNAL PIN	NUMBER OF SHIELD	A	B	M	Au (um) THICKNESS	Sn (um) THICKNESS
75197-*001	10	80	0	20.00	18.00	4.75	0.76	0.76-1.52

75197-*501	25	200	0	50.00	48.00		0.76	

75197-*002	10	80	0	20.00	18.00	6.25	0.76	

75197-*502	25	200	0	50.00	48.00		0.76	

75197-*003	10	80	0	20.00	18.00	4.25	0.76	

75197-*503	25	200	0	50.00	48.00		0.76	

75197-*004	10	80	0	20.00	18.00	5.15	0.76	

75197-*504	25	200	0	50.00	48.00		0.76	

MATERIAL NUMBER ASSIGNMENT

75197- ** **

- ** — SEE TABLE
- NUMBER OF COLUMNS/PLATING
  - 10 = 10 COLUMN TIN/LEAD
  - 25 = 25 COLUMN TIN/LEAD
  - 90 = 10 COLUMN MATTE TIN
  - 85 = 25 COLUMN MATTE TIN

SEE SHEET 1
EC NO: UCP2006-0059 2005/07/13
DRWN:KMULVEY 2005/07/13
CH'KD: 2005/07/15
APPR:SREED
DESCRIPTION
REV E

QUALITY SYMBOLS
▼=0
▽=0

GENERAL TOLERANCES (UNLESS SPECIFIED)

	mm	INCH
4 PLACES	± ---	± ---
3 PLACES	± ---	± ---
2 PLACES	± ---	± ---
1 PLACE	± ---	± ---
ANGULAR ±1/2°		

DRAFT WHERE APPLICABLE MUST REMAIN WITHIN DIMENSIONS

DIMENSION STYLE: MM ONLY
SCALE: 2.5:1
DESIGN UNITS: METRIC
THIRD ANGLE PROJECTION

		DATE
DRAWN BY	MBANDURA	2002/10/07
CHECKED BY	NMARTIN	2002/10/07
APPROVED BY	CBIXLER	2002/10/07

TITLE: VHDM LITE 8 ROW OPEN END BACKPLANE SALES ASSEMBLY

molex MOLEX INCORPORATED

MATERIAL NO.: SEE CHART
DOCUMENT NO.: SD-75197-001
SHEET NO.: 2 OF 2
SIZE: B

THIS DRAWING CONTAINS INFORMATION THAT IS PROPRIETARY TO MOLEX INCORPORATED AND SHOULD NOT BE USED WITHOUT WRITTEN PERMISSION