Data sheet | Item number: 750-564

4-channel analog output; Voltage/Current

www.wago.com/750-564

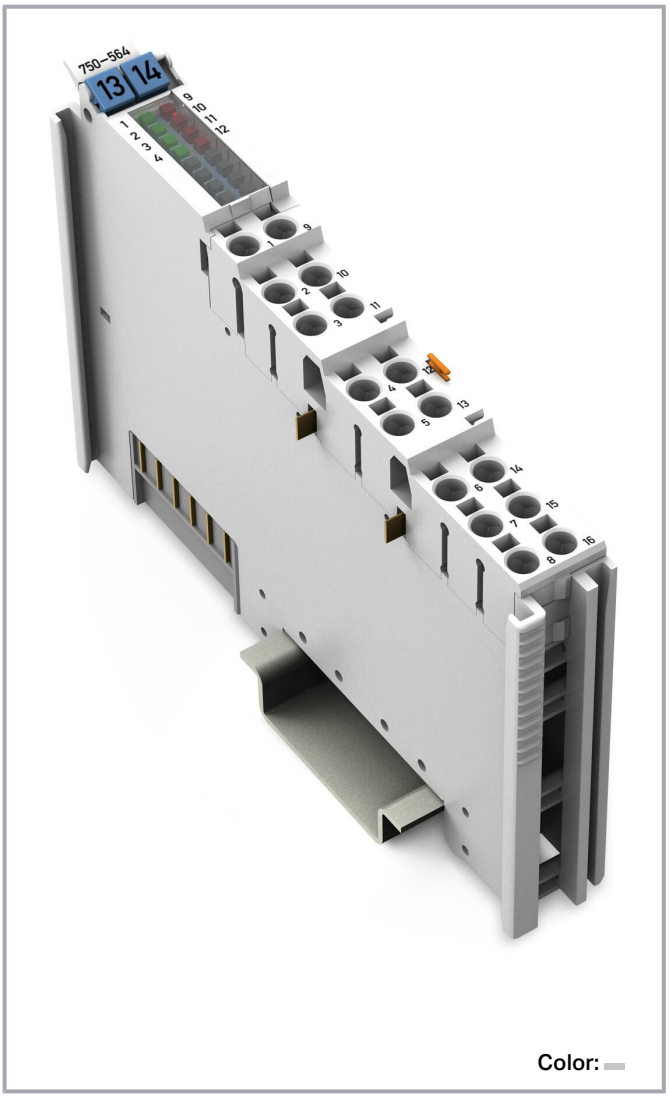

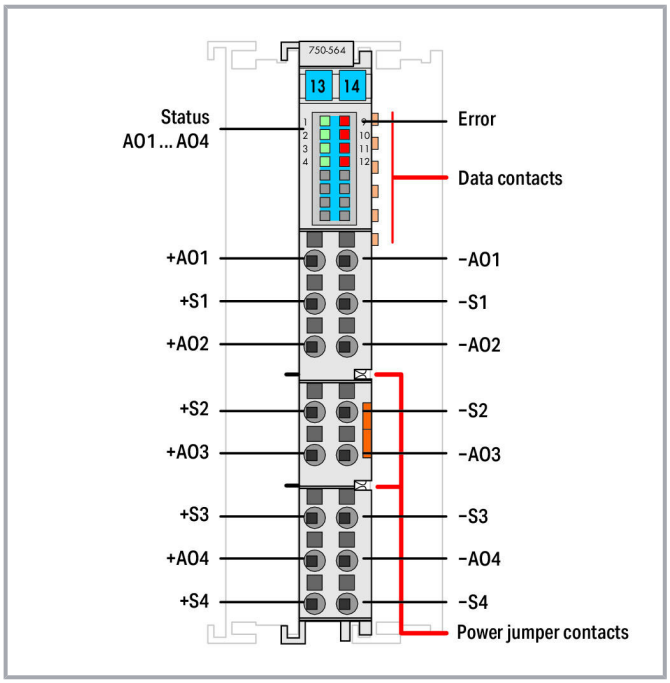

Subject to changes. Please also observe the further product documentation!

WAGO Kontakttechnik GmbH & Co. KG
Hansastr. 27
32423 Minden
Phone: +49571 887-0 | Fax: +49571 887-169
Email: info.de@wago.com | Web: www.wago.com

Do you have any questions about our products?
We are always happy to take your call at +49 (571) 887-44222.

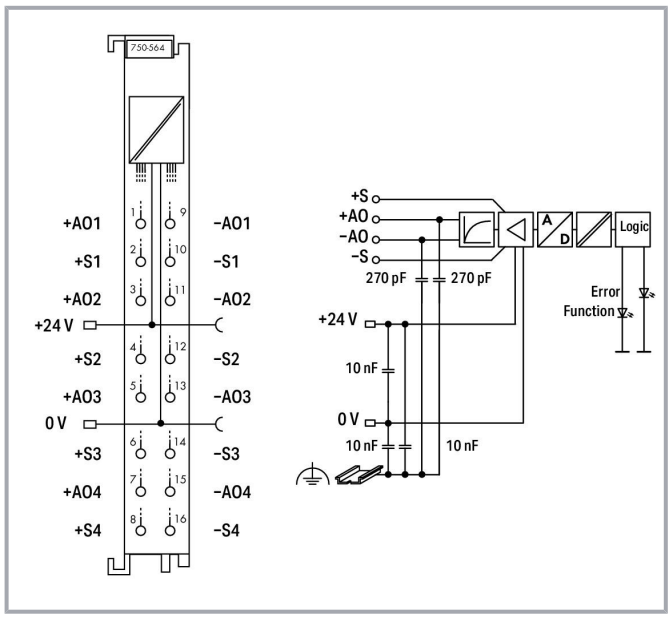

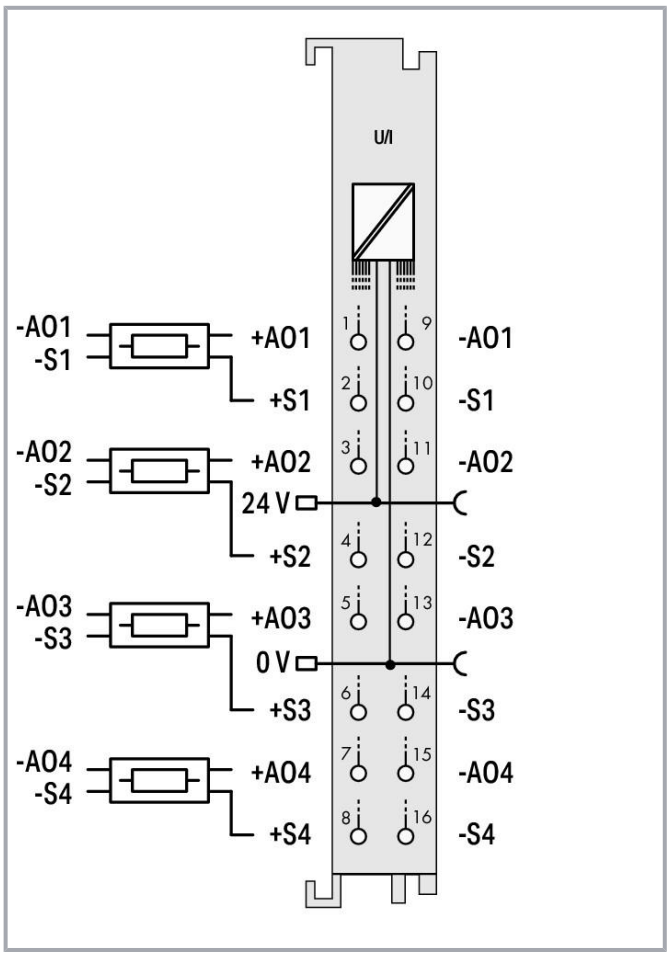

Item description

The analog output module provides a variety of standardized signals for voltage and current.
The output signal can be parameterized channel by channel.
The output signal is electrically isolated and transmitted with a resolution of 16 bits.
Both the internal system and field side supply power the module.
Wire break, overload and insufficient field supply, are diagnosed and displayed.
The module is protected against wrong wiring (feedback).

Voltage outputs can optionally be connected in 4-wire technology via the sense lines.

The module can be configured via GSD file, ***e!COCKPIT*** and WAGO-I/O-*CHECK*.

Data

Technical data

Number of analog outputs	4

Subject to changes. Please also observe the further product documentation!

WAGO Kontakttechnik GmbH & Co. KG
Hansastr. 27
32423 Minden
Phone: +49571 887-0 | Fax: +49571 887-169
Email: info.de@wago.com | Web: www.wago.com

Do you have any questions about our products?
We are always happy to take your call at +49 (571) 887-44222.

Total number of channels (module)	4
Signal type	Voltage Current
Signal type (current)	0 … 10 mA; 2 … 10 mA; -10 … +10 mA; 0 … 20 mA; 4 … 20 mA; -20 … +20 mA; 0 … 22 mA; -22 … +22 mA; 0 … 12 mA; -12 … +12 mA
Voltage signal type	0 … 5 V; 1 … 5 V; -5 … +5 V; 0 … 10 V; 2 … 10 V; -10 … +10 V; 0 … 12 V; -12 … +12 V
Actuator connection	4 x (2-wire); Voltage outputs can optionally be connected in 4-wire technology via the sense lines.
Resolution [bit]	16 bits
Data width	4 x 16-bit data; 4 x 8-bit control/status (optional)
Load impedance (voltage output)	≥ 1 kΩ
Load impedance (current output)	≤ 600 Ω
Conversion time (typ.)	3 ms
Reference for measurement error	Voltage/Current
Output error, reference temperature	25. °C
Output error, deviation (max.) of the upper-range value	0.05 %
Temperature coefficient	U: ±25 ppm/K of the output range value; I: ±50 ppm/K of the output range value
Supply voltage (system)	5 VDC; via data contacts
Power consumption (5 V system supply)	55 mA
Supply voltage (field)	24 VDC (-25 … +30 %); via power jumper contacts (power supply via blade contact; transmission via spring contact)
Isolation	500 V system/field
Number of incoming power jumper contacts	2
Number of outgoing power jumper contacts	2

Connection data

Connection technology: inputs/outputs	16 x Push-in CAGE CLAMP®
Connection type (1)	Inputs/Outputs
Solid conductor	0.08 … 1.5 mm² / 28 … 16 AWG
Fine-stranded conductor	0.25 … 1.5 mm² / 22 … 16 AWG
Strip length	8 … 9 mm / 0.31 … 0.35 inch

Physical data

Width	12 mm / 0.472 inch
Height	100 mm / 3.937 inch
Depth	69 mm / 2.717 inch

Subject to changes. Please also observe the further product documentation!

WAGO Kontakttechnik GmbH & Co. KG
Hansastr. 27
32423 Minden
Phone: +49571 887-0 | Fax: +49571 887-169
Email: info.de@wago.com | Web: www.wago.com

Do you have any questions about our products?
We are always happy to take your call at +49 (571) 887-44222.

Depth from upper edge of DIN-rail	61.8 mm / 2.433 inch

Mechanical data

Mounting type	DIN-35 rail

Material data

Color	light gray
Housing material	Polycarbonate; polyamide 6.6
Fire load	0.809 MJ
Weight	51 g
Conformity marking	CE

Environmental requirements

Surrounding air temperature (operation)	0 … 55 °C
Surrounding air temperature (storage)	-40 … 85 °C
Protection type	IP20
Pollution degree (5)	2 per IEC 61131-2
Operating altitude	0 … 2000 m
Mounting position	horizontal (standing/lying); vertical
Relative humidity (without condensation)	95 %
Shock resistance	15g per IEC 60068-2-27
EMC immunity to interference	per EN 61000-6-2
EMC emission of interference	per EN 61000-6-3
Exposure to pollutants	Per IEC 60068-2-42 and IEC 60068-2-43
Permissible H_2S contaminant concentration at a relative humidity 75 %	10 ppm
Permissible SO_2 contaminant concentration at a relative humidity 75 %	25 ppm

Commercial data

PU (SPU)	1 Stück
Packaging type	box
Country of origin	DE
GTIN	4055143933223
Customs tariff number	85389099990

Subject to changes. Please also observe the further product documentation!

WAGO Kontakttechnik GmbH & Co. KG
Hansastr. 27
32423 Minden
Phone: +49571 887-0 | Fax: +49571 887-169
Email: info.de@wago.com | Web: www.wago.com

Do you have any questions about our products?
We are always happy to take your call at +49 (571) 887-44222.

Approvals / Certificates

Ex-Approvals

Logo	Approval	Additional Approval Text	Certificate name
	ATEX TUEV Nord Cert GmbH	EN 60079	TUEV_14_ATEX_148929_X
Ex nA IIC T4 Gc	**CCCEx** CQST/CNEx	CNCA-C23-01	2020312310000213
	IECEx TUEV Nord Cert GmbH	IEC 60079	IECEx_TUN_14.0035_X
	UL Underwriters Laboratories Inc. (HAZARDOUS LOCATIONS)	UL 121201	E198726 Sec.1

Country specific Approvals

Logo	Approval	Additional Approval Text	Certificate name
	KC National Radio Research Agency	Article 58-2, Clause 3	MSIP-REM-W43-AOM750

Ship Approvals

Logo	Approval	Additional Approval Text	Certificate name
	BV Bureau Veritas S.A.	Rules for class. of Steel Ships	66711/A0
	DNV GL Det Norske Veritas, Germanischer Lloyd	-	TAA0000194

UL-Approvals

Logo	Approval	Additional Approval Text	Certificate name
	UL	UL 61010-2-201	E175199

Subject to changes. Please also observe the further product documentation!

WAGO Kontakttechnik GmbH & Co. KG
Hansastr. 27
32423 Minden
Phone: +49571 887-0 | Fax: +49571 887-169
Email: info.de@wago.com | Web: www.wago.com

Do you have any questions about our products?
We are always happy to take your call at +49 (571) 887-44222.

Underwriters Laboratories Inc. (ORDINARY LOCATIONS) Sec10

Optional accessories

Marking accessories

	Item no.: 248-501 Mini-WSB marking card; as card; not stretchable; plain; snap-on type; white	www.wago.com/248-501
	Item no.: 248-501/000-002 Mini-WSB marking card; as card; not stretchable; plain; snap-on type; yellow	www.wago.com/248-501/000-002
	Item no.: 248-501/000-005 Mini-WSB marking card; as card; not stretchable; plain; snap-on type; red	www.wago.com/248-501/000-005
	Item no.: 248-501/000-006 Mini-WSB marking card; as card; not stretchable; plain; snap-on type; blue	www.wago.com/248-501/000-006
	Item no.: 248-501/000-007 Mini-WSB marking card; as card; not stretchable; plain; snap-on type; gray	www.wago.com/248-501/000-007
	Item no.: 248-501/000-012 Mini-WSB marking card; as card; not stretchable; plain; snap-on type; orange	www.wago.com/248-501/000-012
	Item no.: 248-501/000-017 Mini-WSB marking card; as card; not stretchable; plain; snap-on type; light green	www.wago.com/248-501/000-017
	Item no.: 248-501/000-023 Mini-WSB marking card; as card; not stretchable; plain; snap-on type; green	www.wago.com/248-501/000-023
	Item no.: 248-501/000-024 Mini-WSB marking card; as card; not stretchable; plain; snap-on type; violet	www.wago.com/248-501/000-024
	Item no.: 750-103 Group marker carrier	www.wago.com/750-103
	Item no.: 750-107 Group marker carrier	www.wago.com/750-107

Tool

WAGO Kontakttechnik GmbH & Co. KG
Hansastr. 27
32423 Minden
Phone: +49571 887-0 | Fax: +49571 887-169
Email: info.de@wago.com | Web: www.wago.com

	**Item no.: 210-719** Operating tool; Blade: 2.5 x 0.4 mm; with a partially insulated shaft	www.wago.com/210-719
Carrier rail		
	Item no.: 210-112 Steel carrier rail; 35 x 7.5 mm; 1 mm thick; 2 m long; slotted; according to EN 60715; "Hole width 25 mm; silver-colored	www.wago.com/210-112
	Item no.: 210-113 Steel carrier rail; 35 x 7.5 mm; 1 mm thick; 2 m long; unslotted; according to EN 60715; silver-colored	www.wago.com/210-113
	Item no.: 210-114 Steel carrier rail; 35 x 15 mm; 1.5 mm thick; 2 m long; unslotted; similar to EN 60715; silver-colored	www.wago.com/210-114
	Item no.: 210-115 Steel carrier rail; 35 x 7.5 mm; 1 mm thick; 2 m long; slotted; according to EN 60715; "Hole width 18 mm; silver-colored	www.wago.com/210-115
	Item no.: 210-118 Steel carrier rail; 35 x 15 mm; 2.3 mm thick; 2 m long; unslotted; according to EN 60715; silver-colored	www.wago.com/210-118
	Item no.: 210-196 Aluminum carrier rail; 35 x 8.2 mm; 1.6 mm thick; 2 m long; unslotted; similar to EN 60715; silver-colored	www.wago.com/210-196
	Item no.: 210-197 Steel carrier rail; 35 x 15 mm; 1.5 mm thick; 2 m long; slotted; similar to EN 60715; silver-colored	www.wago.com/210-197
	Item no.: 210-198 Copper carrier rail; 35 x 15 mm; 2.3 mm thick; 2 m long; unslotted; according to EN 60715; copper-colored	www.wago.com/210-198
	Item no.: 210-504 Steel carrier rail; 35 x 7.5 mm; 1 mm thick; 2 m long; slotted; galvanized; according to EN 60715; silver-colored	www.wago.com/210-504
	Item no.: 210-505 Steel carrier rail; 35 x 7.5 mm; 1 mm thick; 2 m long; unslotted; galvanized; according to EN 60715; silver-colored	www.wago.com/210-505
	Item no.: 210-506 Steel carrier rail; 35 x 15 mm; 1.5 mm thick; 2 m long; unslotted; galvanized; similar to EN 60715; silver-colored	www.wago.com/210-506
	Item no.: 210-508 Steel carrier rail; 35 x 15 mm; 1.5 mm thick; 2 m long; slotted; galvanized; similar to EN 60715; silver-colored	www.wago.com/210-508
Shield termination		
	**Item no.: 790-108** Shield clamping saddle; 11 mm wide; diameter of compatible conductor; 3 … 8 mm	www.wago.com/790-108
	**Item no.: 790-116** Shield clamping saddle; 19 mm wide; diameter of compatible conductor; 7 … 16 mm	www.wago.com/790-116
	**Item no.: 790-124** Shield clamping saddle; 27 mm wide; diameter of compatible conductor; 6 … 24 mm	www.wago.com/790-124

Subject to changes. Please also observe the further product documentation!

WAGO Kontakttechnik GmbH & Co. KG
Hansastr. 27
32423 Minden
Phone: +49571 887-0 | Fax: +49571 887-169
Email: info.de@wago.com | Web: www.wago.com

Do you have any questions about our products?
We are always happy to take your call at +49 (571) 887-44222.

	**Item no.: 790-140** Shield clamping saddle; diameter of compatible conductor	www.wago.com/790-140
	**Item no.: 790-208** Shield clamping saddle; 12.4 mm wide; 3 … 8 mm	www.wago.com/790-208
	**Item no.: 790-216** Shield clamping saddle; 21.8 mm wide; 6 … 16 mm	www.wago.com/790-216
	**Item no.: 790-220** Shield clamping saddle; 30 mm wide; 6 … 20 mm	www.wago.com/790-220
System housing		
	Item no.: 850-814/002-000 IP65 enclosure; Sheet steel (RAL 7035); WxHxD (200x120x200 mm); without flange plate	www.wago.com/850-814/002-000
	Item no.: 850-815/002-000 IP65 enclosure; Sheet steel (RAL 7035); WxHxD (300x120x200 mm); without flange plate	www.wago.com/850-815/002-000
	Item no.: 850-816/002-000 IP65 enclosure; Sheet steel (RAL 7035); WxHxD (400x120x200 mm); without flange plate	www.wago.com/850-816/002-000
	Item no.: 850-817/002-000 IP65 enclosure; Sheet steel (RAL 7035); WxHxD (600x120x200 mm); without flange plate	www.wago.com/850-817/002-000
	Item no.: 850-825 IP65 enclosure; Aluminium (RAL 7032); WxHxD (160x100x160 mm); 9 x M12, 4 x M20	www.wago.com/850-825
	Item no.: 850-826 IP65 enclosure; Aluminium (RAL 7032); WxHxD (240x100x160 mm); 4 x M20, 4 x M16, 14 x M12 cable grip	www.wago.com/850-826
	Item no.: 850-826/002-000 IP65 enclosure; Aluminium (RAL 7035); WxHxD (240x100x160 mm); 4 x M20, 4 x M16, 14 x M12 cable grip	www.wago.com/850-826/002-000
	Item no.: 850-827 IP65 enclosure; Aluminium (RAL 7032); WxHxD (320x100x160 mm); 4 x M20, 8 x M16, 17 x M12 cable grip	www.wago.com/850-827
	Item no.: 850-827/002-000 IP65 enclosure; Aluminium (RAL 7035); WxHxD (320x100x160 mm); 4 x M20, 8 x M16, 17 x M12 cable grip	www.wago.com/850-827/002-000
	Item no.: 850-828 IP65 enclosure; Aluminium (RAL 7032); WxHxD (480x100x160 mm); 4 x M20, 10 x M16, 35 x M12 cable grip	www.wago.com/850-828
	Item no.: 850-828/002-000 IP65 enclosure; Aluminium (RAL 7035); WxHxD (480x100x160 mm); 4 x M20, 10 x M16, 35 x M12 cable grip	www.wago.com/850-828/002-000

Subject to changes. Please also observe the further product documentation!

WAGO Kontakttechnik GmbH & Co. KG
Hansastr. 27
32423 Minden
Phone: +49571 887-0 | Fax: +49571 887-169
Email: info.de@wago.com | Web: www.wago.com

Do you have any questions about our products?
We are always happy to take your call at +49 (571) 887-44222.

	Item no.: 850-834 IP65 enclosure; Polyester (RAL 7032); WxHxD (164x100x164 mm); 9 x M12, 4 x M20	www.wago.com/850-834

Supply module

	Item no.: 750-601 Power Supply; 24 VDC; fuse holder	www.wago.com/750-601
	Item no.: 750-602 Power Supply; 24 VDC	www.wago.com/750-602
	Item no.: 750-610 Power Supply; 24 VDC; fuse holder; Diagnostics	www.wago.com/750-610
	Item no.: 750-612 Power Supply; 0 … 230 V AC/DC	www.wago.com/750-612

Downloads

Documentation

Manual

4-Channel Analog Output Module; Voltage/Current	V 1.0.0 2020. 2. 3.	pdf 4.8 MB	Download
System Manual WAGO I/O System 750 / 753 Decentralized Automation Technology	V 3.0.2 2021. 4. 27.	pdf 6.6 MB	Download
System Manual Series 750/753 Online HTML		URL	Download

System Description

750/753 Series I/O-System – General Product Information		pdf 1.7 MB	Download
Overview on WAGO-I/O-SYSTEM 750 approvals		pdf 780.2 kB	Download

Additional Information

Disposal; Electrical and electronic equipment, Packaging	V 1.0.0	pdf 265.8 kB	Download

CAD/CAE-Data

CAE data

Subject to changes. Please also observe the further product documentation!

WAGO Kontakttechnik GmbH & Co. KG
Hansastr. 27
32423 Minden
Phone: +49571 887-0 | Fax: +49571 887-169
Email: info.de@wago.com | Web: www.wago.com

Do you have any questions about our products?
We are always happy to take your call at +49 (571) 887-44222.

ZUKEN Portal 750-564	URL	Download
EPLAN Data Portal 750-564	URL	Download

CAD data

2D/3D Models 750-564	URL	Download

Environmental Product Compliance

Compliance Search

Environmental Product Compliance 750-564 4-channel analog output; Voltage/Current	URL	Download

Installation Notes

Product family

750/753 Series I/O System
Show all products from the family

WAGO Kontakttechnik GmbH & Co. KG
Hansastr. 27
32423 Minden
Phone: +49571 887-0 | Fax: +49571 887-169
Email: info.de@wago.com | Web: www.wago.com