74VHC595-Q100; 74VHCT595-Q100

8-bit serial-in/serial-out or parallel-out shift register with output latches

Rev. 1 — 15 November 2013 Product data sheet

1. General description

The 74VHC595-Q100; 74VHCT595-Q100 are high-speed Si-gate CMOS devices and are pin compatible with Low-power Schottky TTL (LSTTL). It is specified in compliance with JEDEC standard No. 7A.

The 74VHC595-Q100; 74VHCT595-Q100 are 8-stage serial shift registers with a storage register and 3-state outputs. The shift registers have separate clocks.

Data is shifted on the positive-going transitions of the shift register clock input (SHCP). The data in each register is transferred to the storage register on a positive-going transition of the storage register clock input (STCP). If both clocks are connected together, the shift register is always one clock pulse ahead of the storage register.

The shift register has a serial input (DS) and a serial standard output (Q7S) for cascading. It is also provided with asynchronous reset (active LOW) for all 8 shift register stages. The storage register has 8 parallel 3-state bus driver outputs. Data in the storage register appears at the output whenever the output enable input ($\overline{OE}$) is LOW.

This product has been qualified to the Automotive Electronics Council (AEC) standard Q100 (Grade 1) and is suitable for use in automotive applications.

2. Features and benefits

- Automotive product qualification in accordance with AEC-Q100 (Grade 1)
  - Specified from –40 °C to +85 °C and from –40 °C to +125 °C
- Balanced propagation delays
- All inputs have Schmitt-trigger action
- Inputs accept voltages higher than V_{CC}
- Input levels:
  - The 74VHC595-Q100 operates with CMOS input level
  - The 74VHCT595-Q100 operates with TTL input level
- ESD protection:
  - MIL-STD-883, method 3015 exceeds 2000 V
  - HBM JESD22-A114F exceeds 2000 V
  - MM JESD22-A115-A exceeds 200 V (C = 200 pf, R = 0 Ω)
- Multiple package options

3. Applications

- Serial-to-parallel data conversion
- Remote control holding register

4. Ordering information

Table 1. Ordering information

Type number	Package			
	Temperature range	Name	Description	Version
74VHC595D-Q100	–40 °C to +125 °C	SO16	plastic small outline package; 16 leads; body width 3.9 mm	SOT109-1
74VHCT595D-Q100				
74VHC595PW-Q100	–40 °C to +125 °C	TSSOP16	plastic thin shrink small outline package; 16 leads; body width 4.4 mm	SOT403-1
74VHCT595PW-Q100				
74VHC595BQ-Q100	–40 °C to +125 °C	DHVQFN16	plastic dual in-line compatible thermal enhanced very thin quad flat package; no leads; 16 terminals; body 2.5 × 3.5 × 0.85 mm	SOT763-1
74VHCT595BQ-Q100				

5. Functional diagram

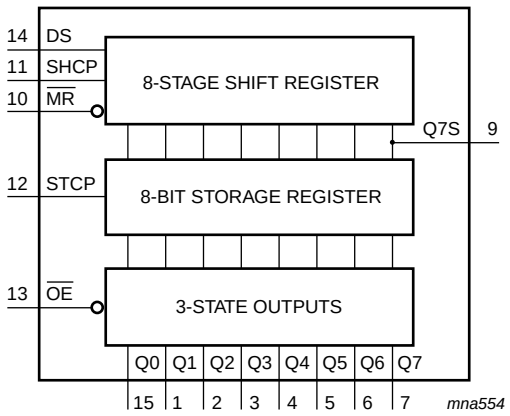

Fig 1. Functional diagram

All information provided in this document is subject to legal disclaimers.

© Nexperia B.V. 2017. All rights reserved

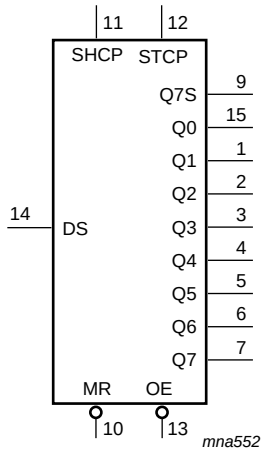

Fig 2. Logic symbol

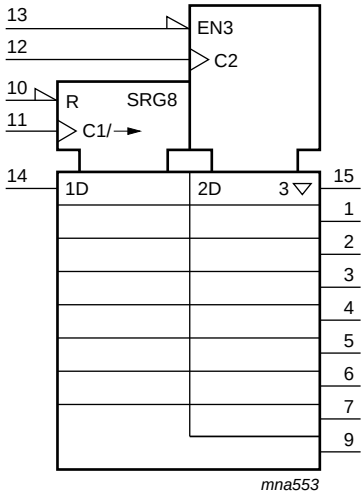

Fig 3. IEC logic symbol

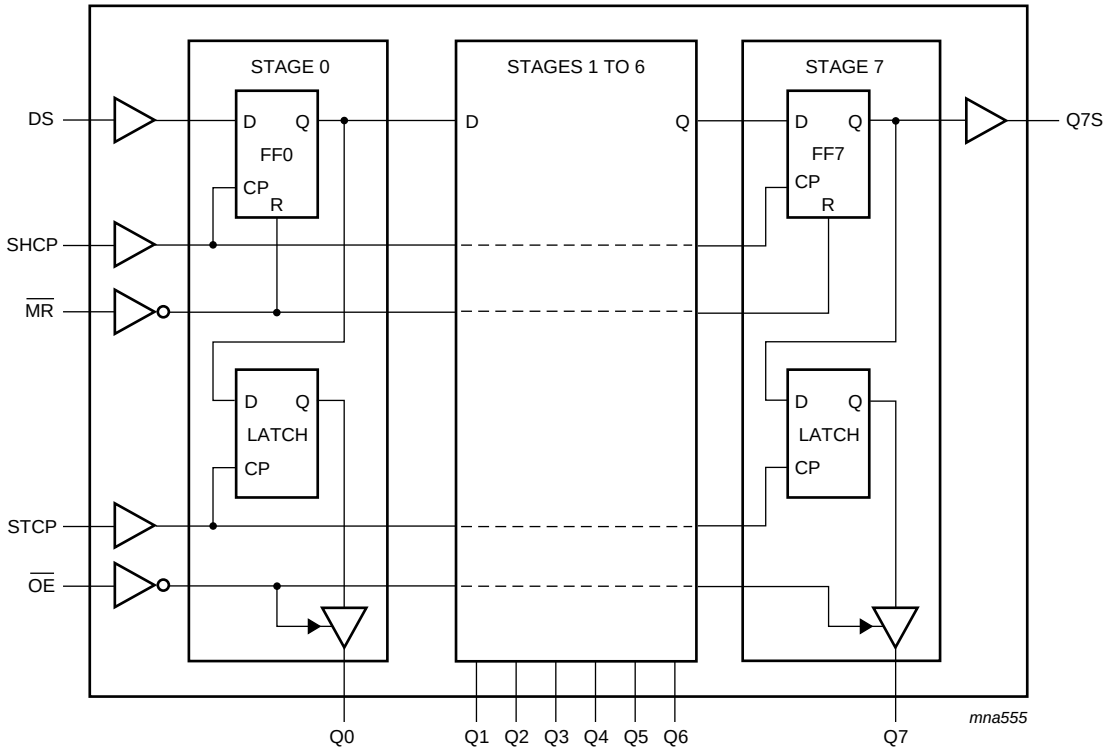

Fig 4. Logic diagram

All information provided in this document is subject to legal disclaimers.

© Nexperia B.V. 2017. All rights reserved

6. Pinning information

6.1 Pinning

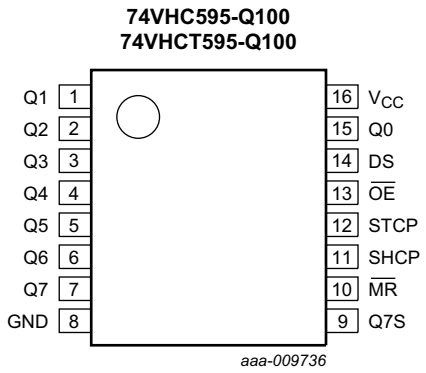

Fig 5. Pin configuration SO16 and TSSOP16

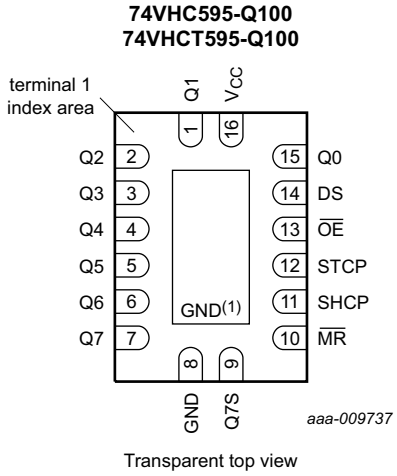

(1) This is not a supply pin. The substrate is attached to this pad using conductive die attach material. There is no electrical or mechanical requirement to solder this pad. However, if it is soldered, the solder land should remain floating or be connected to GND.

Fig 6. Pin configuration DHVQFN16

6.2 Pin description

Table 2. Pin description

Symbol	Pin	Description
Q1	1	parallel data output 1
Q2	2	parallel data output 2
Q3	3	parallel data output 3
Q4	4	parallel data output 4
Q5	5	parallel data output 5
Q6	6	parallel data output 6
Q7	7	parallel data output 7
GND	8	ground (0 V)
Q7S	9	serial data output
$\overline{MR}$	10	master reset (active LOW)
SHCP	11	shift register clock input
STCP	12	storage register clock input
$\overline{OE}$	13	output enable input (active LOW)
DS	14	serial data input
Q0	15	parallel data output 0
V_{CC}	16	supply voltage

All information provided in this document is subject to legal disclaimers.

© Nexperia B.V. 2017. All rights reserved

7. Functional description

Table 3. Function table[1]

Control				Input	Output		Function
SHCP	STCP	$\overline{OE}$	$\overline{MR}$	DS	Q7S	Qn	
X	X	L	L	X	L	NC	a LOW-level on $\overline{MR}$ only affects the shift registers
X	↑	L	L	X	L	L	empty shift register loaded into storage register
X	X	H	L	X	L	Z	shift register clear; parallel outputs in high-impedance OFF-state
↑	X	L	H	H	Q6S	NC	logic HIGH-level shifted into shift register stage 0. Contents of all shift register stages shifted through, e.g. previous state of stage 6 (internal Q6S) appears on the serial output (Q7S).
X	↑	L	H	X	NC	QnS	contents of shift register stages (internal QnS) are transferred to the storage register and parallel output stages
↑	↑	L	H	X	Q6S	QnS	contents of shift register shifted through; previous contents of the shift register is transferred to the storage register and the parallel output stages

[1] H = HIGH voltage state;
L = LOW voltage state;
↑ = LOW-to-HIGH transition;
X = don't care;
NC = no change;
Z = high-impedance OFF-state.

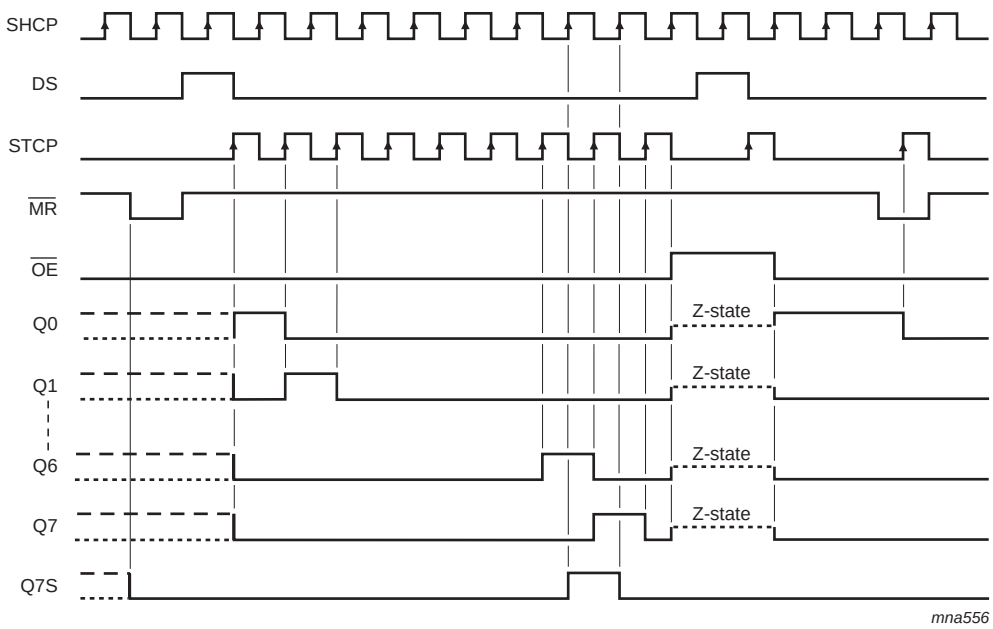

Fig 7. Timing diagram

All information provided in this document is subject to legal disclaimers.

© Nexperia B.V. 2017. All rights reserved

8. Limiting values

Table 4. Limiting values

In accordance with the Absolute Maximum Rating System (IEC 60134). Voltages are referenced to GND (ground = 0 V).

Symbol	Parameter	Conditions		Min	Max	Unit
V_{CC}	supply voltage			–0.5	+7.0	V
V_I	input voltage			–0.5	+7.0	V
I_{IK}	input clamping current	V_I < –0.5 V	[1]	–20	-	mA
I_{OK}	output clamping current	V_O < –0.5 V or V_O > V_{CC} + 0.5 V	[1]	–20	+20	mA
I_O	output current	V_O = –0.5 V to (V_{CC} + 0.5 V)		–25	+25	mA
I_{CC}	supply current			-	+75	mA
I_{GND}	ground current			–75	-	mA
T_{stg}	storage temperature			–65	+150	°C
P_{tot}	total power dissipation	T_{amb} = –40 °C to +125 °C	[2]	-	500	mW

[1] The input and output voltage ratings may be exceeded if the input and output current ratings are observed.

[2] For SO16 packages: above 70 °C the value of P_{tot} derates linearly at 8 mW/K.
For TSSOP16 packages: above 60 °C the value of P_{tot} derates linearly at 5.5 mW/K.
For DHVQFN16 packages: above 60 °C the value of P_{tot} derates linearly at 4.5 mW/K.

9. Recommended operating conditions

Table 5. Operating conditions

Symbol	Parameter	Conditions	Min	Typ	Max	Unit
74VHC595-Q100						
V_{CC}	supply voltage		2.0	5.0	5.5	V
V_I	input voltage		0	-	5.5	V
V_O	output voltage		0	-	V_{CC}	V
T_{amb}	ambient temperature		–40	+25	+125	°C
Δt/ΔV	input transition rise and fall rate	V_{CC} = 3.0 V to 3.6 V	-	-	100	ns/V
		V_{CC} = 4.5 V to 5.5 V	-	-	20	ns/V
74VHCT595-Q100						
V_{CC}	supply voltage		4.5	5.0	5.5	V
V_I	input voltage		0	-	5.5	V
V_O	output voltage		0	-	V_{CC}	V
T_{amb}	ambient temperature		–40	+25	+125	°C
Δt/ΔV	input transition rise and fall rate	V_{CC} = 4.5 V to 5.5 V	-	-	20	ns/V

All information provided in this document is subject to legal disclaimers.

© Nexperia B.V. 2017. All rights reserved

10. Static characteristics

Table 6. Static characteristics

At recommended operating conditions; voltages are referenced to GND (ground = 0 V).

Symbol	Parameter	Conditions	25 °C			–40 °C to +85 °C		–40 °C to +125 °C		Unit
			Min	Typ	Max	Min	Max	Min	Max	
74VHC595-Q100										
V_{IH}	HIGH-level input voltage	V_{CC} = 2.0 V	1.5	-	-	1.5	-	1.5	-	V
		V_{CC} = 3.0 V	2.1	-	-	2.1	-	2.1	-	V
		V_{CC} = 5.5 V	3.85	-	-	3.85	-	3.85	-	V
V_{IL}	LOW-level input voltage	V_{CC} = 2.0 V	-	-	0.5	-	0.5	-	0.5	V
		V_{CC} = 3.0 V	-	-	0.9	-	0.9	-	0.9	V
		V_{CC} = 5.5 V	-	-	1.65	-	1.65	-	1.65	V
V_{OH}	HIGH-level output voltage	$V_I = V_{IH}$ or V_{IL}								
		I_O = –50 μA; V_{CC} = 2.0 V	1.9	2.0	-	1.9	-	1.9	-	V
		I_O = –50 μA; V_{CC} = 3.0 V	2.9	3.0	-	2.9	-	2.9	-	V
		I_O = –50 μA; V_{CC} = 4.5 V	4.4	4.5	-	4.4	-	4.4	-	V
		I_O = –4.0 mA; V_{CC} = 3.0 V	2.58	-	-	2.48	-	2.40	-	V
		I_O = –8.0 mA; V_{CC} = 4.5 V	3.94	-	-	3.80	-	3.70	-	V
V_{OL}	LOW-level output voltage	$V_I = V_{IH}$ or V_{IL}								
		I_O = 50 μA; V_{CC} = 2.0 V	-	0	0.1	-	0.1	-	0.1	V
		I_O = 50 μA; V_{CC} = 3.0 V	-	0	0.1	-	0.1	-	0.1	V
		I_O = 50 μA; V_{CC} = 4.5 V	-	0	0.1	-	0.1	-	0.1	V
		I_O = 4.0 mA; V_{CC} = 3.0 V	-	-	0.36	-	0.44	-	0.55	V
		I_O = 8.0 mA; V_{CC} = 4.5 V	-	-	0.36	-	0.44	-	0.55	V
I_I	input leakage current	V_I = 5.5 V or GND; V_{CC} = 0 V to 5.5 V	-	-	0.1	-	1.0	-	2.0	μA
I_{OZ}	OFF-state output current	$V_I = V_{IH}$ or V_{IL}; $V_O = V_{CC}$ or GND; V_{CC} = 5.5 V	-	-	±0.25	-	±2.5	-	±10	μA
I_{CC}	supply current	$V_I = V_{CC}$ or GND; I_O = 0 A; V_{CC} = 5.5 V	-	-	4.0	-	40	-	80	μA
C_I	input capacitance		-	3	10	-	10	-	10	pF
74VHCT595-Q100										
V_{IH}	HIGH-level input voltage	V_{CC} = 4.5 V to 5.5 V	2.0	-	-	2.0	-	2.0	-	V
V_{IL}	LOW-level input voltage	V_{CC} = 4.5 V to 5.5 V	-	-	0.8	-	0.8	-	0.8	V
V_{OH}	HIGH-level output voltage	$V_I = V_{IH}$ or V_{IL}; V_{CC} = 4.5 V								
		I_O = –50 μA	4.4	4.5	-	4.4	-	4.4	-	V
		I_O = –8.0 mA	3.94	-	-	3.80	-	3.70	-	V
V_{OL}	LOW-level output voltage	$V_I = V_{IH}$ or V_{IL}; V_{CC} = 4.5 V								
		I_O = 50 μA	-	0	0.1	-	0.1	-	0.1	V
		I_O = 8.0 mA	-	-	0.36	-	0.44	-	0.55	V

All information provided in this document is subject to legal disclaimers.

© Nexperia B.V. 2017. All rights reserved

Table 6. Static characteristics *...continued*

At recommended operating conditions; voltages are referenced to GND (ground = 0 V).

Symbol	Parameter	Conditions	25 °C			–40 °C to +85 °C		–40 °C to +125 °C		Unit
			Min	Typ	Max	Min	Max	Min	Max	
I_I	input leakage current	V_I = 5.5 V or GND; V_{CC} = 0 V to 5.5 V	-	-	0.1	-	1.0	-	2.0	μA
I_{OZ}	OFF-state output current	$V_I = V_{IH}$ or V_{IL}; $V_O = V_{CC}$ or GND per input pin; other inputs at V_{CC} or GND; I_O = 0 A; V_{CC} = 5.5 V	-	-	±0.25	-	±2.5	-	±10	μA
I_{CC}	supply current	$V_I = V_{CC}$ or GND; I_O = 0 A; V_{CC} = 5.5 V	-	-	4.0	-	40	-	80	μA
ΔI_{CC}	additional supply current	per input pin; $V_I = V_{CC}$ – 2.1 V; other inputs at V_{CC} or GND; I_O = 0 A; V_{CC} = 4.5 V to 5.5 V	-	-	1.35	-	1.5	-	1.5	mA
C_I	input capacitance		-	3	10	-	10	-	10	pF

11. Dynamic characteristics

Table 7. Dynamic characteristics

Voltages are referenced to GND (ground = 0 V); for test circuit, see Figure 13.

Symbol	Parameter	Conditions	25 °C			–40 °C to +85 °C		–40 °C to +125 °C		Unit
			Min	Typ[1]	Max	Min	Max	Min	Max	
74VHC595-Q100										
t_{pd}	propagation delay	SHCP to Q7S; see Figure 8 [2]								
		V_{CC} = 3.0 V to 3.6 V								
		C_L = 15 pF	-	5.7	13.0	1.0	15.0	1.0	16.5	ns
		C_L = 50 pF	-	7.7	16.5	1.0	18.5	1.0	20.1	ns
		V_{CC} = 4.5 V to 5.5 V								
		C_L = 15 pF	-	4.0	8.2	1.0	9.4	1.0	10.5	ns
		C_L = 50 pF	-	5.4	10.0	1.0	11.4	1.0	12.5	ns
		STCP to Qn; see Figure 9 [2]								
		V_{CC} = 3.0 V to 3.6 V								
		C_L = 15 pF	-	5.9	11.9	1.0	13.5	1.0	15.0	ns
		C_L = 50 pF	-	7.7	15.4	1.0	17.0	1.0	18.5	ns
		V_{CC} = 4.5 V to 5.5 V								
		C_L = 15 pF	-	4.2	7.4	1.0	8.5	1.0	9.5	ns
		C_L = 50 pF	-	5.5	9.0	1.0	10.5	1.0	11.5	ns
		$\overline{MR}$ to Q7S; see Figure 11 [3]								
		V_{CC} = 3.0 V to 3.6 V								
		C_L = 15 pF	-	5.9	12.8	1.0	13.7	1.0	15.0	ns
		C_L = 50 pF	-	7.4	16.3	1.0	17.2	1.0	18.7	ns
		V_{CC} = 4.5 V to 5.5 V								
		C_L = 15 pF	-	4.4	8.0	1.0	9.1	1.0	10.0	ns
		C_L = 50 pF	-	5.6	10.0	1.0	11.1	1.0	12.0	ns

All information provided in this document is subject to legal disclaimers.

© Nexperia B.V. 2017. All rights reserved

Table 7. Dynamic characteristics *...continued*

Voltages are referenced to GND (ground = 0 V); for test circuit, see Figure 13.

Symbol	Parameter	Conditions		25 °C			–40 °C to +85 °C		–40 °C to +125 °C		Unit
				Min	Typ[1]	Max	Min	Max	Min	Max	
t_{en}	enable time	$\overline{OE}$ to Qn; see Figure 12	[4]								
		V_{CC} = 3.0 V to 3.6 V									
		C_L = 15 pF		-	5.6	11.5	1.0	13.5	1.0	15.0	ns
		C_L = 50 pF		-	7.4	15.0	1.0	17.0	1.0	18.5	ns
		V_{CC} = 4.5 V to 5.5 V									
		C_L = 15 pF		-	4.0	8.6	1.0	10.0	1.0	11.0	ns
		C_L = 50 pF		-	5.3	10.6	1.0	12.0	1.0	13.0	ns
t_{dis}	disable time	$\overline{OE}$ to Qn; see Figure 12	[5]								
		V_{CC} = 3.0 V to 3.6 V									
		C_L = 15 pF		-	5.4	11.0	1.0	13.0	1.0	14.5	ns
		C_L = 50 pF		-	8.7	15.7	1.0	16.2	1.0	17.5	ns
		V_{CC} = 4.5 V to 5.5 V									
		C_L = 15 pF		-	3.8	8.0	1.0	9.5	1.0	10.5	ns
		C_L = 50 pF		-	5.8	10.3	1.0	11.0	1.0	12.0	ns
f_{max}	maximum frequency	SHCP or STCP; see Figure 8 and 9									
		V_{CC} = 3.0 V to 3.6 V		80	125	-	60	-	40	-	MHz
		V_{CC} = 4.5 V to 5.5 V		130	170	-	110	-	90	-	MHz
t_W	pulse width	SHCP HIGH or LOW; see Figure 8									
		V_{CC} = 3.0 V to 3.6 V		5.0	-	-	5.0	-	5.0	-	ns
		V_{CC} = 4.5 V to 5.5 V		5.0	-	-	5.0	-	5.0	-	ns
		STCP HIGH or LOW; see Figure 9									
		V_{CC} = 3.0 V to 3.6 V		5.0	-	-	5.0	-	5.0	-	ns
		V_{CC} = 4.5 V to 5.5 V		5.0	-	-	5.0	-	5.0	-	ns
		$\overline{MR}$ LOW; see Figure 11									
		V_{CC} = 3.0 V to 3.6 V		5.0	-	-	5.0	-	5.0	-	ns
		V_{CC} = 4.5 V to 5.5 V		5.0	-	-	5.0	-	5.0	-	ns
t_{su}	set-up time	DS to SHCP; see Figure 9									
		V_{CC} = 3.0 V to 3.6 V		3.5	-	-	3.5	-	3.5	-	ns
		V_{CC} = 4.5 V to 5.5 V		3.0	-	-	3.0	-	3.0	-	ns
		SHCP to STCP; see Figure 10									
		V_{CC} = 3.0 V to 3.6 V		8.5	-	-	8.5	-	8.5	-	ns
		V_{CC} = 4.5 V to 5.5 V		5.0	-	-	5.0	-	5.0	-	ns
t_h	hold time	DS to SHCP; see Figure 10									
		V_{CC} = 3.0 V to 3.6 V		1.5	-	-	1.5	-	1.5	-	ns
		V_{CC} = 4.5 V to 5.5 V		2.0	-	-	2.0	-	2.0	-	ns

All information provided in this document is subject to legal disclaimers.

© Nexperia B.V. 2017. All rights reserved

Table 7. Dynamic characteristics *...continued*

Voltages are referenced to GND (ground = 0 V); for test circuit, see Figure 13.

Symbol	Parameter	Conditions		25 °C			–40 °C to +85 °C		–40 °C to +125 °C		Unit
				Min	Typ[1]	Max	Min	Max	Min	Max	
t_{rec}	recovery time	$\overline{MR}$ to SHCP; see Figure 11									
		V_{CC} = 3.0 V to 3.6 V		3.0	-	-	3.0	-	3.0	-	ns
		V_{CC} = 4.5 V to 5.5 V		2.5	-	-	2.5	-	2.5	-	ns
C_{PD}	power dissipation capacitance	f_i = 1 MHz; V_I = GND to V_{CC}	[6] [7]	-	180	-	-	-	-	-	pF
74VHCT595-Q100; V_{CC} = 4.5 V to 5.5 V											
t_{pd}	propagation delay	SHCP to Q7S; see Figure 8	[2]								
		C_L = 15 pF		-	3.8	8.2	1.0	9.0	1.0	10.0	ns
		C_L = 50 pF		-	5.2	10.0	1.0	11.0	1.0	12.0	ns
		STCP to Qn; see Figure 9	[2]								
		C_L = 15 pF		-	4.0	7.4	1.0	8.5	1.0	9.5	ns
		C_L = 50 pF		-	5.3	9.0	1.0	10.5	1.0	11.5	ns
		$\overline{MR}$ to Q7S; see Figure 11	[3]								
		C_L = 15 pF		-	4.6	8.2	1.0	9.5	1.0	10.5	ns
		C_L = 50 pF		-	5.8	10.5	1.0	11.5	1.0	12.5	ns
t_{en}	enable time	$\overline{OE}$ to Qn; see Figure 12	[4]								
		C_L = 15 pF		-	4.8	9.0	1.0	11.0	1.0	12.0	ns
		C_L = 50 pF		-	6.2	11.6	1.0	13.0	1.0	14.5	ns
t_{dis}	disable time	$\overline{OE}$ to Qn; see Figure 12	[5]								
		C_L = 15 pF		-	3.6	6.9	1.0	8.0	1.0	9.0	ns
		C_L = 50 pF		-	5.8	10.3	1.0	11.0	1.0	12.0	ns
f_{max}	maximum frequency	SHCP and STCP; see Figure 8 and 9		130	170	-	110	-	90	-	MHz
t_W	pulse width	SHCP HIGH or LOW; see Figure 8		5.0	-	-	5.0	-	5.0	-	ns
		STCP HIGH or LOW; see Figure 9		5.0	-	-	5.0	-	5.0	-	ns
		$\overline{MR}$ LOW; see Figure 11		5.0	-	-	5.0	-	5.0	-	ns
t_{su}	set-up time	DS to SHCP; see Figure 9		3.0	-	-	3.0	-	3.0	-	ns
		SHCP to STCP; see Figure 10		5.0	-	-	5.0	-	5.0	-	ns
t_h	hold time	DS to SHCP; see Figure 10		2.0	-	-	2.0	-	2.0	-	ns
t_{rec}	recovery time	$\overline{MR}$ to SHCP; see Figure 11		3.0	-	-	3.0	-	3.0	-	ns

All information provided in this document is subject to legal disclaimers.

© Nexperia B.V. 2017. All rights reserved

Table 7. Dynamic characteristics *...continued*

Voltages are referenced to GND (ground = 0 V); for test circuit, see Figure 13.

Symbol	Parameter	Conditions		25 °C			–40 °C to +85 °C		–40 °C to +125 °C		Unit
				Min	Typ[1]	Max	Min	Max	Min	Max	
C_{PD}	power dissipation capacitance	f_i = 1 MHz; V_I = GND to V_{CC}	[6] [7]	-	190	-	-	-	-	-	pF

[1] Typical values are measured at nominal supply voltage.

[2] t_{pd} is the same as t_{PHL} and t_{PLH}.

[3] t_{pd} is the same as t_{PHL} only.

[4] t_{en} is the same as t_{PZL} and t_{PZH}.

[5] t_{dis} is the same as t_{PLZ} and t_{PHZ}.

[6] C_{PD} is used to determine the dynamic power dissipation (P_D in μW).
$P_D = C_{PD} \times V_{CC}^2 \times f_i + \Sigma(C_L \times V_{CC}^2 \times f_o)$ where:
f_i = input frequency in MHz;
f_o = output frequency in MHz;
$\Sigma(C_L \times V_{CC}^2 \times f_o)$ = sum of outputs;
C_L = output load capacitance in pF;
V_{CC} = supply voltage in V.

[7] All 9 outputs switching.

12. Waveforms

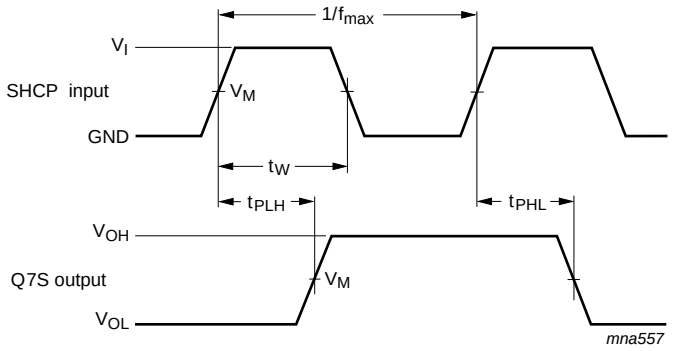

Measurement points are given in Table 8.

V_{OL} and V_{OH} are typical output voltage levels that occur with the output load.

Fig 8. Shift clock pulse, maximum frequency and input to output propagation delays

All information provided in this document is subject to legal disclaimers.

© Nexperia B.V. 2017. All rights reserved

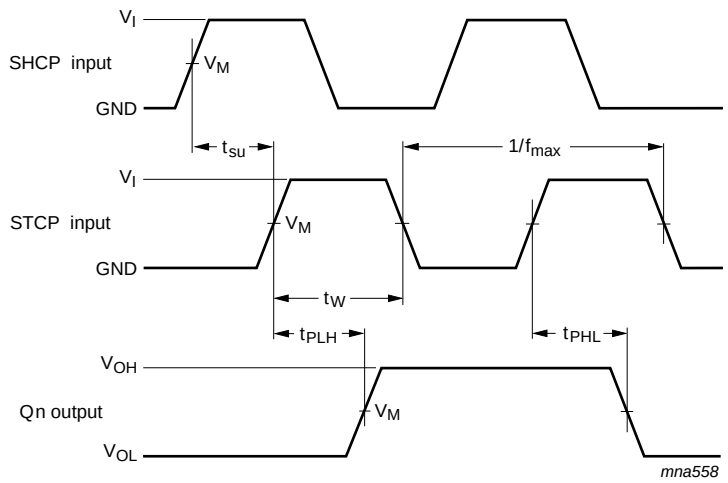

Measurement points are given in Table 8.

V_{OL} and V_{OH} are typical output voltage levels that occur with the output load.

Fig 9. Storage clock to output propagation delays

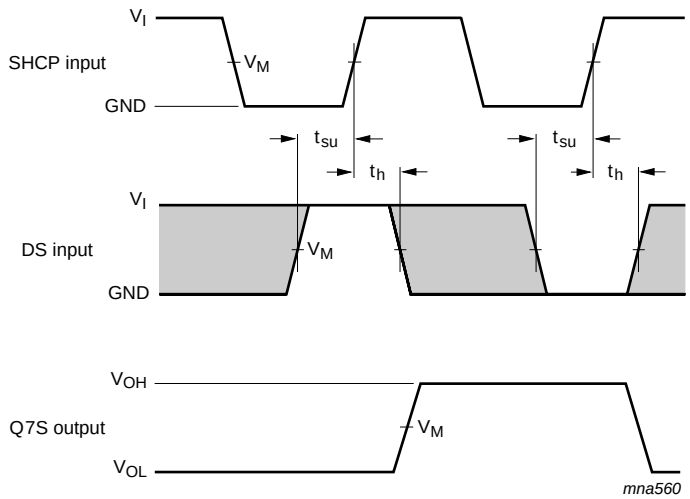

Measurement points are given in Table 8.

The shaded areas indicate when the input is permitted to change for predictable output performance.

V_{OL} and V_{OH} are typical output voltage levels that occur with the output load.

Fig 10. Data set-up and hold times

All information provided in this document is subject to legal disclaimers.
© Nexperia B.V. 2017. All rights reserved

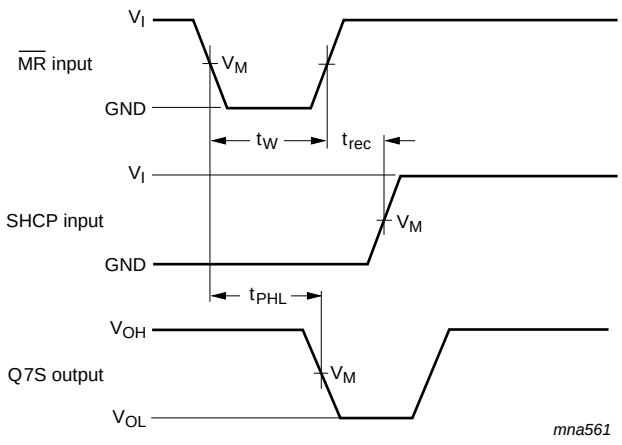

Measurement points are given in Table 8.

V_{OL} and V_{OH} are typical output voltage levels that occur with the output load.

Fig 11. Master reset to output propagation delays

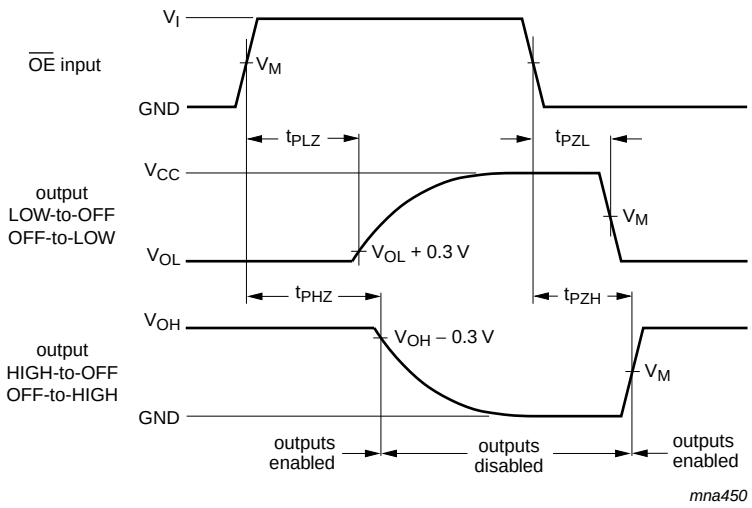

Measurement points are given in Table 8.

V_{OL} and V_{OH} are typical output voltage levels that occur with the output load.

Fig 12. Enable and disable times

Table 8. Measurement points

Type	Input	Output
	V_M	V_M
74VHC595-Q100	$0.5V_{CC}$	$0.5V_{CC}$
74VHCT595-Q100	1.5 V	$0.5V_{CC}$

All information provided in this document is subject to legal disclaimers.
© Nexperia B.V. 2017. All rights reserved

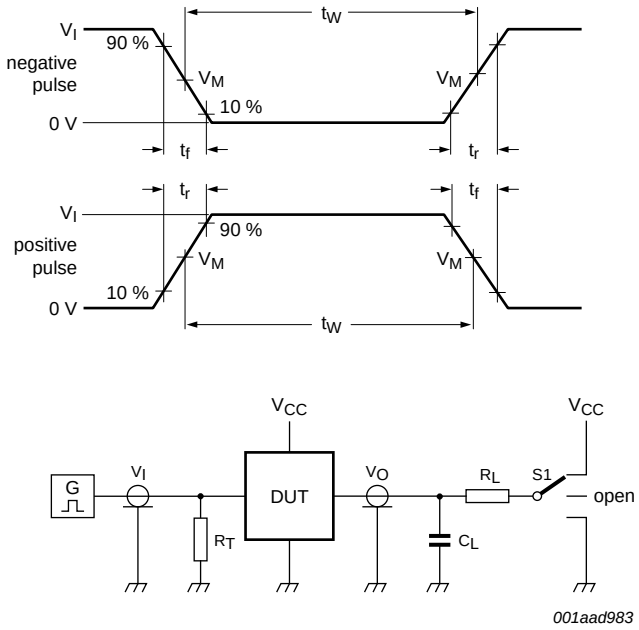

Test data is given in Table 9.

Definitions for test circuit:

C_L = load capacitance including jig and probe capacitance.

R_L = load resistance.

R_T = termination resistance should be equal to the output impedance Z_o of the pulse generator.

S1 = test selection switch.

Fig 13. Load circuitry for switching times

Table 9. Test data

Type	Input		Load		S1 position		
	V_I	t_r, t_f	C_L	R_L	t_{PHL}, t_{PLH}	t_{PZH}, t_{PHZ}	t_{PZL}, t_{PLZ}
74VHC595-Q100	V_{CC}	≤ 3.0 ns	15 pF, 50 pF	1 kΩ	open	GND	V_{CC}
74VHCT595-Q100	3.0 V	≤ 3.0 ns	15 pF, 50 pF	1 kΩ	open	GND	V_{CC}

All information provided in this document is subject to legal disclaimers.

© Nexperia B.V. 2017. All rights reserved

13. Package outline

SO16: plastic small outline package; 16 leads; body width 3.9 mm **SOT109-1**

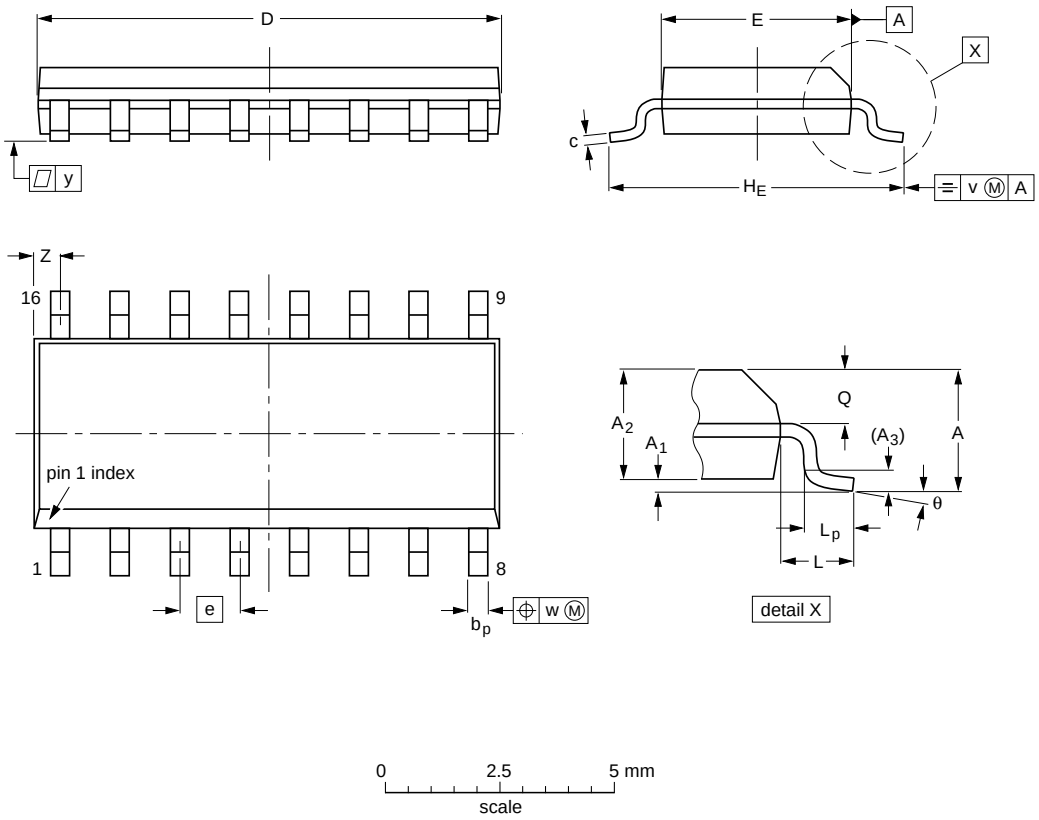

DIMENSIONS (inch dimensions are derived from the original mm dimensions)

UNIT	A max.	A_1	A_2	A_3	b_p	c	D(1)	E(1)	e	H_E	L	L_p	Q	v	w	y	Z(1)	θ
mm	1.75	0.25 0.10	1.45 1.25	0.25	0.49 0.36	0.25 0.19	10.0 9.8	4.0 3.8	1.27	6.2 5.8	1.05	1.0 0.4	0.7 0.6	0.25	0.25	0.1	0.7 0.3	8° 0°
inches	0.069	0.010 0.004	0.057 0.049	0.01	0.019 0.014	0.0100 0.0075	0.39 0.38	0.16 0.15	0.05	0.244 0.228	0.041	0.039 0.016	0.028 0.020	0.01	0.01	0.004	0.028 0.012	

Note

1. Plastic or metal protrusions of 0.15 mm (0.006 inch) maximum per side are not included.

OUTLINE VERSION	REFERENCES				EUROPEAN PROJECTION	ISSUE DATE
	IEC	JEDEC	JEITA			
SOT109-1	076E07	MS-012				~~99-12-27~~ 03-02-19

Fig 14. Package outline SOT109-1 (SO16)

All information provided in this document is subject to legal disclaimers.

© Nexperia B.V. 2017. All rights reserved

TSSOP16: plastic thin shrink small outline package; 16 leads; body width 4.4 mm **SOT403-1**

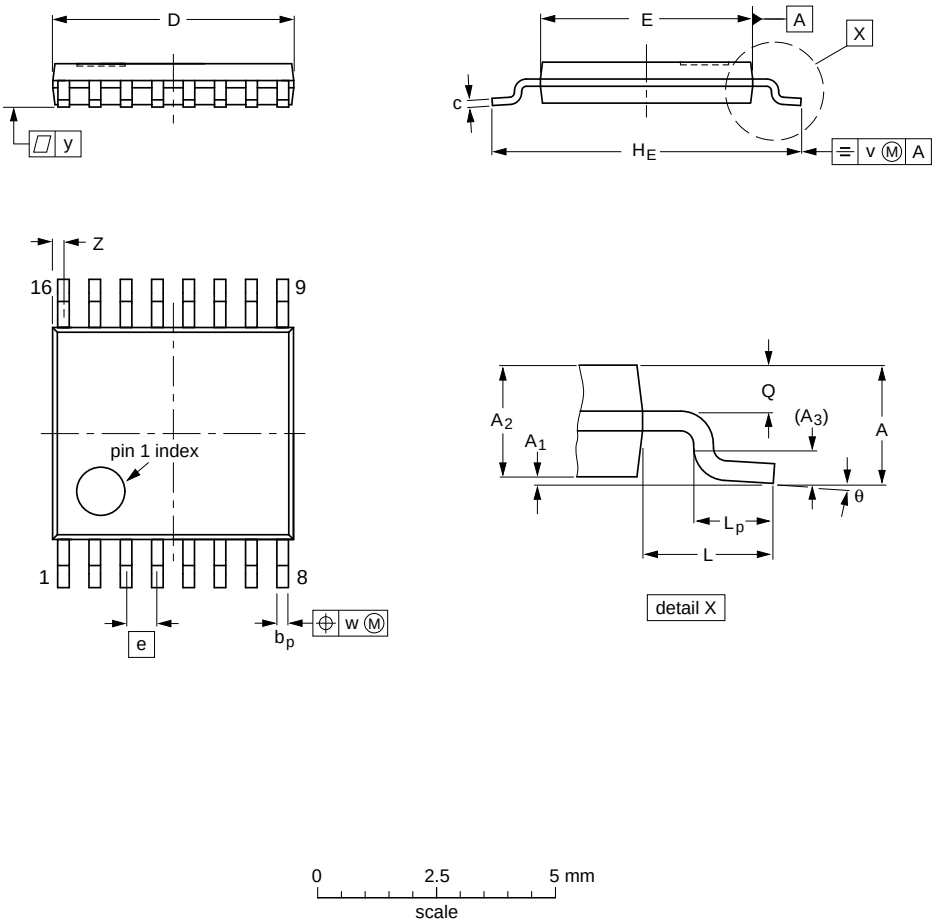

DIMENSIONS (mm are the original dimensions)

UNIT	A max.	A_1	A_2	A_3	b_p	c	D (1)	E (2)	e	H_E	L	L_p	Q	v	w	y	Z (1)	θ
mm	1.1	0.15 0.05	0.95 0.80	0.25	0.30 0.19	0.2 0.1	5.1 4.9	4.5 4.3	0.65	6.6 6.2	1	0.75 0.50	0.4 0.3	0.2	0.13	0.1	0.40 0.06	8° 0°

Notes

1. Plastic or metal protrusions of 0.15 mm maximum per side are not included.
2. Plastic interlead protrusions of 0.25 mm maximum per side are not included.

OUTLINE VERSION	REFERENCES				EUROPEAN PROJECTION	ISSUE DATE
	IEC	JEDEC	JEITA			
SOT403-1		MO-153				~~99-12-27~~ 03-02-18

Fig 15. Package outline SOT403-1 (TSSOP16)

All information provided in this document is subject to legal disclaimers.

© Nexperia B.V. 2017. All rights reserved

DHVQFN16: plastic dual in-line compatible thermal enhanced very thin quad flat package; no leads; 16 terminals; body 2.5 x 3.5 x 0.85 mm **SOT763-1**

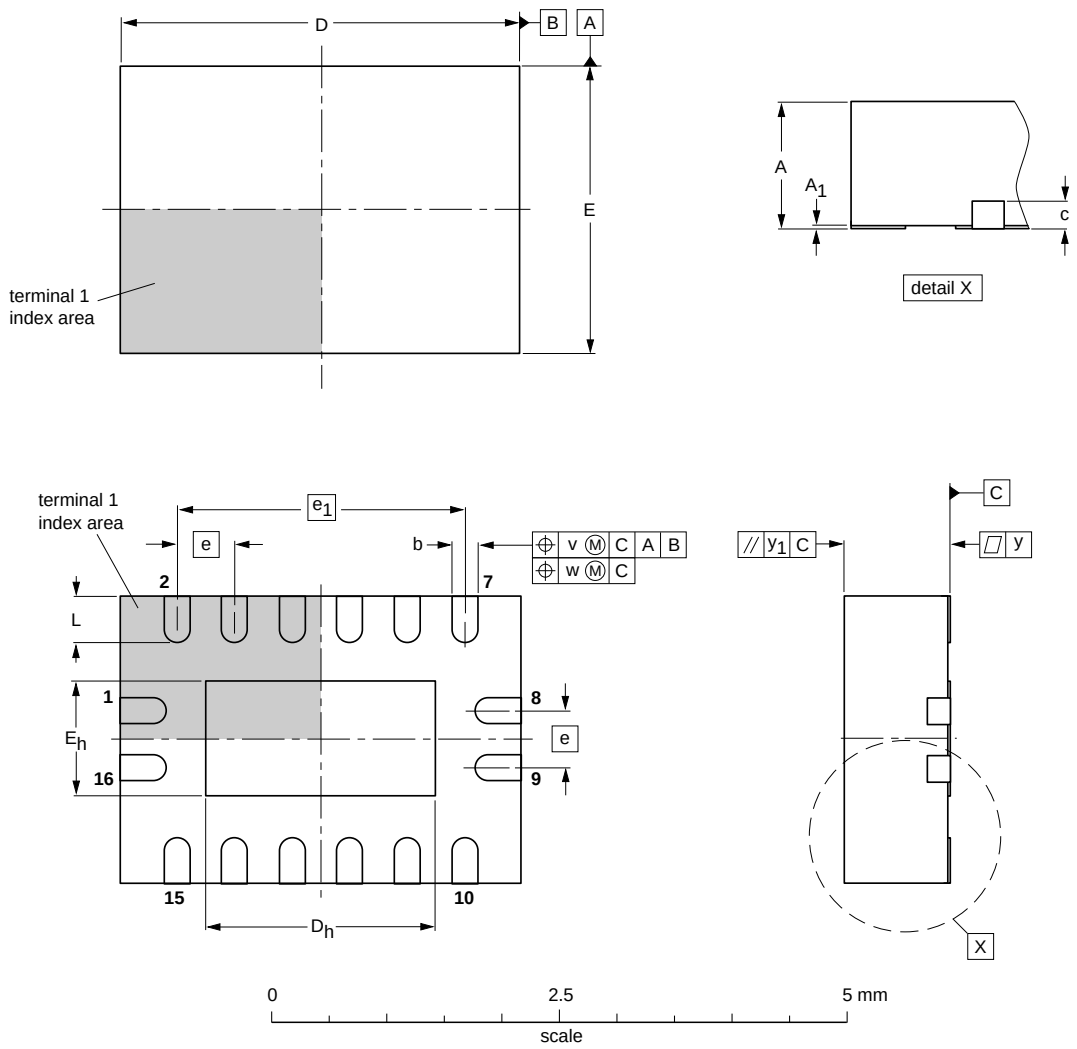

DIMENSIONS (mm are the original dimensions)

UNIT	A(1) max.	A_1	b	c	D(1)	D_h	E(1)	E_h	e	e_1	L	v	w	y	y_1
mm	1	0.05 0.00	0.30 0.18	0.2	3.6 3.4	2.15 1.85	2.6 2.4	1.15 0.85	0.5	2.5	0.5 0.3	0.1	0.05	0.05	0.1

Note

1. Plastic or metal protrusions of 0.075 mm maximum per side are not included.

OUTLINE VERSION	REFERENCES				EUROPEAN PROJECTION	ISSUE DATE
	IEC	JEDEC	JEITA			
SOT763-1	- - -	MO-241	- - -			~~02-10-17~~ 03-01-27

Fig 16. Package outline SOT763-1 (DHVQFN16)

All information provided in this document is subject to legal disclaimers.

© Nexperia B.V. 2017. All rights reserved

14. Abbreviations

Table 10. Abbreviations

Acronym	Description
CMOS	Complementary Metal-Oxide Semiconductor
ESD	ElectroStatic Discharge
HBM	Human Body Model
MIL	Military
MM	Machine Model
TTL	Transistor-Transistor Logic

15. Revision history

Table 11. Revision history

Document ID	Release date	Data sheet status	Change notice	Supersedes
74VHC_VHCT595_Q100 v.1	20131115	Product data sheet	-	-

All information provided in this document is subject to legal disclaimers.
© Nexperia B.V. 2017. All rights reserved

16. Legal information

16.1 Data sheet status

Document status[1][2]	Product status[3]	Definition
Objective [short] data sheet	Development	This document contains data from the objective specification for product development.
Preliminary [short] data sheet	Qualification	This document contains data from the preliminary specification.
Product [short] data sheet	Production	This document contains the product specification.

[1] Please consult the most recently issued document before initiating or completing a design.

[2] The term 'short data sheet' is explained in section "Definitions".

[3] The product status of device(s) described in this document may have changed since this document was published and may differ in case of multiple devices. The latest product status information is available on the Internet at URL http://www.nexperia.com.

16.2 Definitions

Draft — The document is a draft version only. The content is still under internal review and subject to formal approval, which may result in modifications or additions. Nexperia does not give any representations or warranties as to the accuracy or completeness of information included herein and shall have no liability for the consequences of use of such information.

Short data sheet — A short data sheet is an extract from a full data sheet with the same product type number(s) and title. A short data sheet is intended for quick reference only and should not be relied upon to contain detailed and full information. For detailed and full information see the relevant full data sheet, which is available on request via the local Nexperia sales office. In case of any inconsistency or conflict with the short data sheet, the full data sheet shall prevail.

Product specification — The information and data provided in a Product data sheet shall define the specification of the product as agreed between Nexperia and its customer, unless Nexperia and customer have explicitly agreed otherwise in writing. In no event however, shall an agreement be valid in which the Nexperia product is deemed to offer functions and qualities beyond those described in the Product data sheet.

16.3 Disclaimers

Limited warranty and liability — Information in this document is believed to be accurate and reliable. However, Nexperia does not give any representations or warranties, expressed or implied, as to the accuracy or completeness of such information and shall have no liability for the consequences of use of such information. Nexperia takes no responsibility for the content in this document if provided by an information source outside of Nexperia.

In no event shall Nexperia be liable for any indirect, incidental, punitive, special or consequential damages (including - without limitation - lost profits, lost savings, business interruption, costs related to the removal or replacement of any products or rework charges) whether or not such damages are based on tort (including negligence), warranty, breach of contract or any other legal theory.

Notwithstanding any damages that customer might incur for any reason whatsoever, Nexperia's aggregate and cumulative liability towards customer for the products described herein shall be limited in accordance with the *Terms and conditions of commercial sale* of Nexperia.

Right to make changes — Nexperia reserves the right to make changes to information published in this document, including without limitation specifications and product descriptions, at any time and without notice. This document supersedes and replaces all information supplied prior to the publication hereof.

Suitability for use in automotive applications — This Nexperia product has been qualified for use in automotive applications. Unless otherwise agreed in writing, the product is not designed, authorized or warranted to be suitable for use in life support, life-critical or safety-critical systems or equipment, nor in applications where failure or malfunction of a Nexperia product can reasonably be expected to result in personal injury, death or severe property or environmental damage. Nexperia and its suppliers accept no liability for inclusion and/or use of Nexperia products in such equipment or applications and therefore such inclusion and/or use is at the customer's own risk.

Applications — Applications that are described herein for any of these products are for illustrative purposes only. Nexperia makes no representation or warranty that such applications will be suitable for the specified use without further testing or modification.

Customers are responsible for the design and operation of their applications and products using Nexperia products, and Nexperia accepts no liability for any assistance with applications or customer product design. It is customer's sole responsibility to determine whether the Nexperia product is suitable and fit for the customer's applications and products planned, as well as for the planned application and use of customer's third party customer(s). Customers should provide appropriate design and operating safeguards to minimize the risks associated with their applications and products.

Nexperia does not accept any liability related to any default, damage, costs or problem which is based on any weakness or default in the customer's applications or products, or the application or use by customer's third party customer(s). Customer is responsible for doing all necessary testing for the customer's applications and products using Nexperia products in order to avoid a default of the applications and the products or of the application or use by customer's third party customer(s). Nexperia does not accept any liability in this respect.

Limiting values — Stress above one or more limiting values (as defined in the Absolute Maximum Ratings System of IEC 60134) will cause permanent damage to the device. Limiting values are stress ratings only and (proper) operation of the device at these or any other conditions above those given in the Recommended operating conditions section (if present) or the Characteristics sections of this document is not warranted. Constant or repeated exposure to limiting values will permanently and irreversibly affect the quality and reliability of the device.

Terms and conditions of commercial sale — Nexperia products are sold subject to the general terms and conditions of commercial sale, as published at http://www.nexperia.com/profile/terms, unless otherwise agreed in a valid written individual agreement. In case an individual agreement is concluded only the terms and conditions of the respective agreement shall apply. Nexperia hereby expressly objects to applying the customer's general terms and conditions with regard to the purchase of Nexperia products by customer.

All information provided in this document is subject to legal disclaimers.

© Nexperia B.V. 2017. All rights reserved

No offer to sell or license — Nothing in this document may be interpreted or construed as an offer to sell products that is open for acceptance or the grant, conveyance or implication of any license under any copyrights, patents or other industrial or intellectual property rights.

Export control — This document as well as the item(s) described herein may be subject to export control regulations. Export might require a prior authorization from competent authorities.

Translations — A non-English (translated) version of a document is for reference only. The English version shall prevail in case of any discrepancy between the translated and English versions.

16.4 Trademarks

Notice: All referenced brands, product names, service names and trademarks are the property of their respective owners.

17. Contact information

For more information, please visit: **http://www.nexperia.com**

For sales office addresses, please send an email to: **salesaddresses@nexperia.com**

All information provided in this document is subject to legal disclaimers.

© Nexperia B.V. 2017. All rights reserved

18. Contents

1 General description 1
2 Features and benefits 1
3 Applications 2
4 Ordering information 2
5 Functional diagram 2
6 Pinning information 4
6.1 Pinning 4
6.2 Pin description 4
7 Functional description 5
8 Limiting values 6
9 Recommended operating conditions 6
10 Static characteristics 7
11 Dynamic characteristics 8
12 Waveforms 11
13 Package outline 15
14 Abbreviations 18
15 Revision history 18
16 Legal information 19
16.1 Data sheet status 19
16.2 Definitions 19
16.3 Disclaimers 19
16.4 Trademarks 20
17 Contact information 20
18 Contents 21

© Nexperia B.V. 2017. All rights reserved

For more information, please visit: http://www.nexperia.com
For sales office addresses, please send an email to: salesaddresses@nexperia.com
Date of release: 15 November 2013