74LVC3G07

Triple buffer with open-drain output

Rev. 03 — 01 February 2005 Product data sheet

1. General description

The 74LVC3G07 is a high-performance, low-power, low-voltage, Si-gate CMOS device and superior to most advanced CMOS compatible TTL families.

Input can be driven from either 3.3 V or 5 V devices. This feature allows the use of this device in a mixed 3.3 V and 5 V environment.

Schmitt trigger action at all inputs makes the circuit tolerant for slower input rise and fall time.

This device is fully specified for partial power-down applications using I_{off}. The I_{off} circuitry disables the output, preventing the damaging backflow current through the device when it is powered down.

The 74LVC3G07 provides three non-inverting buffers.

The output of the device is an open drain and can be connected to other open-drain outputs to implement active-LOW wired-OR or active-HIGH wired-AND functions.

2. Features

- Wide supply voltage range from 1.65 V to 5.5 V
- 5 V tolerant input/output for interfacing with 5 V logic
- High noise immunity
- Complies with JEDEC standard:
  - JESD8-7 (1.65 V to 1.95 V)
  - JESD8-5 (2.3 V to 2.7 V)
  - JESD8-B/JESD36 (2.7 V to 3.6 V).
- ESD protection:
  - HBM EIA/JESD22-A114-B exceeds 2000 V
  - MM EIA/JESD22-A115-A exceeds 200 V.
- –24 mA output drive (V_{CC} = 3.0 V)
- CMOS low power consumption
- Latch-up performance exceeds 250 mA
- Direct interface with TTL levels
- Inputs accept voltages up to 5 V
- Multiple package options
- Specified from –40 °C to +85 °C and –40 °C to +125 °C.

PHILIPS

3. Quick reference data

Table 1: Quick reference data

GND = 0 V; T_{amb} = 25 °C.

Symbol	Parameter	Conditions		Min	Typ	Max	Unit
t_{PLZ}, t_{PZL}	propagation delay input nA to output nY	V_{CC} = 1.8 V; C_L = 30 pF; R_L = 1 kΩ		-	2.9	-	ns
		V_{CC} = 2.5 V; C_L = 30 pF; R_L = 500 Ω		-	1.7	-	ns
		V_{CC} = 2.7 V; C_L = 50 pF; R_L = 500 Ω		-	2.3	-	ns
		V_{CC} = 3.3 V; C_L = 50 pF; R_L = 500 Ω		-	2.1	-	ns
		V_{CC} = 5.0 V; C_L = 50 pF; R_L = 500 Ω		-	1.5	-	ns
C_I	input capacitance			-	2.5	-	pF
C_{PD}	power dissipation capacitance per gate	V_{CC} = 3.3 V	[1] [2]	-	6.5	-	pF

[1] C_{PD} is used to determine the dynamic power dissipation (P_D in µW).
$P_D = C_{PD} \times V_{CC}^2 \times f_i \times N + \Sigma(C_L \times V_{CC}^2 \times f_o)$ where:
f_i = input frequency in MHz;
f_o = output frequency in MHz;
C_L = output load capacitance in pF;
V_{CC} = supply voltage in Volts;
N = number of inputs switching;
$\Sigma(C_L \times V_{CC}^2 \times f_o)$ = sum of outputs.

[2] The condition is V_I = GND to V_{CC}.

4. Ordering information

Table 2: Ordering information

Type number	Package			
	Temperature range	Name	Description	Version
74LVC3G07DP	–40 °C to +125 °C	TSSOP8	plastic thin shrink small outline package; 8 leads; body width 3 mm; lead length 0.5 mm	SOT505-2
74LVC3G07DC	–40 °C to +125 °C	VSSOP8	plastic very thin shrink small outline package; 8 leads; body width 2.3 mm	SOT765-1
74LVC3G07GT	–40 °C to +125 °C	XSON8	plastic extremely thin small outline package; no leads; 8 terminals; body 1 × 1.95 × 0.5 mm	SOT833-1

5. Marking

Table 3: Marking codes

Type number	Marking code
74LVC3G07DP	V07
74LVC3G07DC	V07
74LVC3G07GT	V07

© Koninklijke Philips Electronics N.V. 2005. All rights reserved.

6. Functional diagram

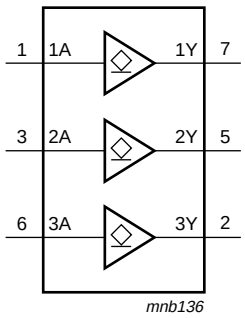

Fig 1. Logic symbol

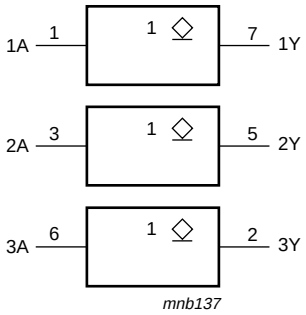

Fig 2. IEC logic symbol

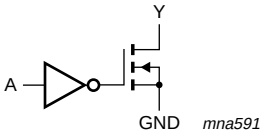

Fig 3. Logic diagram (one driver)

7. Pinning information

7.1 Pinning

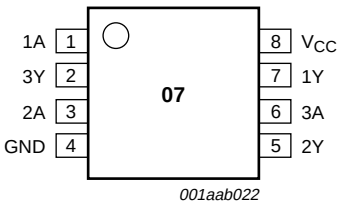

Fig 4. Pin configuration VSSOP8 and TSSOP8

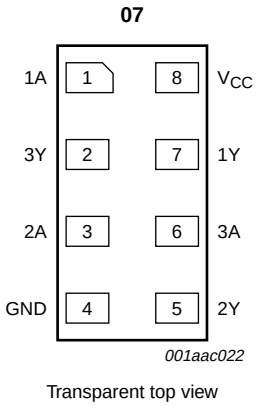

Transparent top view

Fig 5. Pin configuration XSON8

© Koninklijke Philips Electronics N.V. 2005. All rights reserved.

7.2 Pin description

Table 4: Pin description

Symbol	Pin	Description
1A	1	data input
3Y	2	data output
2A	3	data input
GND	4	ground (0 V)
2Y	5	data output
3A	6	data input
1Y	7	data output
V_{CC}	8	supply voltage

8. Functional description

8.1 Function table

Table 5: Function table [1]

Input nA	Output nY
L	L
H	Z

[1] H = HIGH voltage level;
L = LOW voltage level;
Z = high-impedance OFF-state.

9. Limiting values

Table 6: Limiting values

In accordance with the Absolute Maximum Rating System (IEC 60134). Voltages are referenced to GND (ground = 0 V).

Symbol	Parameter	Conditions		Min	Max	Unit
V_{CC}	supply voltage			–0.5	+6.5	V
V_I	input voltage		[1]	–0.5	+6.5	V
V_O	output voltage	active mode	[1]	–0.5	+6.5	V
		Power-down mode	[1] [2]	–0.5	+6.5	V
I_{IK}	input diode current	$V_I < 0$ V		-	–50	mA
I_{OK}	output diode current	$V_O < 0$ V		-	–50	mA
I_O	output sink current	V_O = 0 V to 6.5 V		-	50	mA
I_{CC}, I_{GND}	V_{CC} or GND current			-	±100	mA
T_{stg}	storage temperature			–65	+150	°C
P_{tot}	power dissipation	T_{amb} = –40 °C to +125 °C		-	300	mW

[1] The input and output voltage ratings may be exceeded if the input and output current ratings are observed.

[2] When V_{CC} = 0 V (Power-down mode), the output voltage can be 5.5 V in normal operation.

© Koninklijke Philips Electronics N.V. 2005. All rights reserved.

10. Recommended operating conditions

Table 7: Recommended operating conditions

Symbol	Parameter	Conditions	Min	Typ	Max	Unit
V_{CC}	supply voltage		1.65	-	5.5	V
V_I	input voltage		0	-	5.5	V
V_O	output voltage	active mode	0	-	V_{CC}	V
		Power-down mode; V_{CC} = 0 V	0	-	5.5	V
T_{amb}	ambient temperature		–40	-	+125	°C
t_r, t_f	input rise and fall times	V_{CC} = 1.65 V to 2.7 V	0	-	20	ns/V
		V_{CC} = 2.7 V to 5.5 V	0	-	10	ns/V

11. Static characteristics

Table 8: Static characteristics

At recommended operating conditions; voltages are referenced to GND (ground = 0 V).

Symbol	Parameter	Conditions	Min	Typ	Max	Unit
T_{amb} = –40 °C to +85 °C [1]						
V_{IH}	HIGH-level input voltage	V_{CC} = 1.65 V to 1.95 V	0.65 × V_{CC}	-	-	V
		V_{CC} = 2.3 V to 2.7 V	1.7	-	-	V
		V_{CC} = 2.7 V to 3.6 V	2.0	-	-	V
		V_{CC} = 4.5 V to 5.5 V	0.7 × V_{CC}	-	-	V
V_{IL}	LOW-level input voltage	V_{CC} = 1.65 V to 1.95 V	-	-	0.35 × V_{CC}	V
		V_{CC} = 2.3 V to 2.7 V	-	-	0.7	V
		V_{CC} = 2.7 V to 3.6 V	-	-	0.8	V
		V_{CC} = 4.5 V to 5.5 V	-	-	0.3 × V_{CC}	V
V_{OL}	LOW-level output voltage	V_I = V_{IH} or V_{IL}				
		I_O = 100 µA; V_{CC} = 1.65 V to 5.5 V	-	-	0.1	V
		I_O = 4 mA; V_{CC} = 1.65 V	-	-	0.45	V
		I_O = 8 mA; V_{CC} = 2.3 V	-	-	0.3	V
		I_O = 12 mA; V_{CC} = 2.7 V	-	-	0.4	V
		I_O = 24 mA; V_{CC} = 3.0 V	-	-	0.55	V
		I_O = 32 mA; V_{CC} = 4.5 V	-	-	0.55	V
I_{LI}	input leakage current	V_I = 5.5 V or GND; V_{CC} = 1.65 V to 5.5 V	-	±0.1	±5	µA
I_{OZ}	3-state output OFF-state current	V_I = V_{IH} or V_{IL}; V_O = V_{CC} or GND; V_{CC} = 5.5 V	-	±0.1	±10	µA
I_{off}	power-off leakage current	V_I or V_O = 5.5 V; V_{CC} = 0 V	-	±0.1	±10	µA
I_{CC}	quiescent supply current	V_I = V_{CC} or GND; I_O = 0 A; V_{CC} = 5.5 V	-	0.1	10	µA
ΔI_{CC}	additional quiescent supply current per pin	V_I = V_{CC} – 0.6 V; I_O = 0 A; V_{CC} = 2.3 V to 5.5 V	-	5	500	µA
C_I	input capacitance		-	2.5	-	pF

© Koninklijke Philips Electronics N.V. 2005. All rights reserved.

Table 8: Static characteristics *…continued*

At recommended operating conditions; voltages are referenced to GND (ground = 0 V).

Symbol	Parameter	Conditions	Min	Typ	Max	Unit
T_{amb} = −40 °C to +125 °C						
V_{IH}	HIGH-level input voltage	V_{CC} = 1.65 V to 1.95 V	0.65 × V_{CC}	-	-	V
		V_{CC} = 2.3 V to 2.7 V	1.7	-	-	V
		V_{CC} = 2.7 V to 3.6 V	2.0	-	-	V
		V_{CC} = 4.5 V to 5.5 V	0.7 × V_{CC}	-	-	V
V_{IL}	LOW-level input voltage	V_{CC} = 1.65 V to 1.95 V	-	-	0.35 × V_{CC}	V
		V_{CC} = 2.3 V to 2.7 V	-	-	0.7	V
		V_{CC} = 2.7 V to 3.6 V	-	-	0.8	V
		V_{CC} = 4.5 V to 5.5 V	-	-	0.3 × V_{CC}	V
V_{OL}	LOW-level output voltage	V_I = V_{IH} or V_{IL}				
		I_O = 100 µA; V_{CC} = 1.65 V to 5.5 V	-	-	0.1	V
		I_O = 4 mA; V_{CC} = 1.65 V	-	-	0.70	V
		I_O = 8 mA; V_{CC} = 2.3 V	-	-	0.45	V
		I_O = 12 mA; V_{CC} = 2.7 V	-	-	0.60	V
		I_O = 24 mA; V_{CC} = 3.0 V	-	-	0.80	V
		I_O = 32 mA; V_{CC} = 4.5 V	-	-	0.80	V
I_{LI}	input leakage current	V_I = 5.5 V or GND; V_{CC} = 1.65 V to 5.5 V	-	-	±20	µA
I_{OZ}	3-state output OFF-state current	V_I = V_{IH} or V_{IL}; V_O = V_{CC} or GND; V_{CC} = 5.5 V	-	-	±10	µA
I_{off}	power-off leakage current	V_I or V_O = 5.5 V; V_{CC} = 0 V	-	-	±20	µA
I_{CC}	quiescent supply current	V_I = V_{CC} or GND; I_O = 0 A; V_{CC} = 5.5 V	-	-	40	µA
ΔI_{CC}	additional quiescent supply current per pin	V_I = V_{CC} − 0.6 V; I_O = 0 A; V_{CC} = 2.3 V to 5.5 V	-	-	5000	µA

[1] All typical values are measured at nominal V_{CC} and T_{amb} = 25 °C.

12. Dynamic characteristics

Table 9: Dynamic characteristics

At recommended operating conditions; voltages are referenced to GND (ground = 0 V).

Symbol	Parameter	Conditions	Min	Typ	Max	Unit
T_{amb} = −40 °C to +85 °C [1]						
t_{PLZ}, t_{PZL}	propagation delay input nA to output nY	see Figure 6 and 7				
		V_{CC} = 1.65 V to 1.95 V	1.0	2.9	6.7	ns
		V_{CC} = 2.3 V to 2.7 V	0.5	1.7	4.3	ns
		V_{CC} = 2.7 V	1.0	2.3	4.2	ns
		V_{CC} = 3.0 V to 3.6 V	0.5	2.1	3.7	ns
		V_{CC} = 4.5 V to 5.5 V	0.5	1.5	2.9	ns

© Koninklijke Philips Electronics N.V. 2005. All rights reserved.

Table 9: Dynamic characteristics *…continued*

At recommended operating conditions; voltages are referenced to GND (ground = 0 V).

Symbol	Parameter	Conditions		Min	Typ	Max	Unit
C_{PD}	power dissipation capacitance per gate	V_{CC} = 3.3 V	[2] [3]	-	6.5	-	pF
T_{amb} = −40 °C to +125 °C							
t_{PLZ}, t_{PZL}	propagation delay input nA to output nY	see Figure 6 and 7					
		V_{CC} = 1.65 V to 1.95 V		1.0	-	8.4	ns
		V_{CC} = 2.3 V to 2.7 V		0.5	-	5.5	ns
		V_{CC} = 2.7 V		1.0	-	5.3	ns
		V_{CC} = 3.0 V to 3.6 V		0.5	-	4.7	ns
		V_{CC} = 4.5 V to 5.5 V		0.5	-	3.7	ns

[1] All typical values are measured at nominal V_{CC} and T_{amb} = 25 °C.

[2] C_{PD} is used to determine the dynamic power dissipation (P_D in µW).
$P_D = C_{PD} \times V_{CC}^2 \times f_i \times N + \Sigma(C_L \times V_{CC}^2 \times f_o)$ where:
f_i = input frequency in MHz;
f_o = output frequency in MHz;
C_L = output load capacitance in pF;
V_{CC} = supply voltage in Volts;
N = number of inputs switching;
$\Sigma(C_L \times V_{CC}^2 \times f_o)$ = sum of outputs.

[3] The condition is V_I = GND to V_{CC}.

13. Waveforms

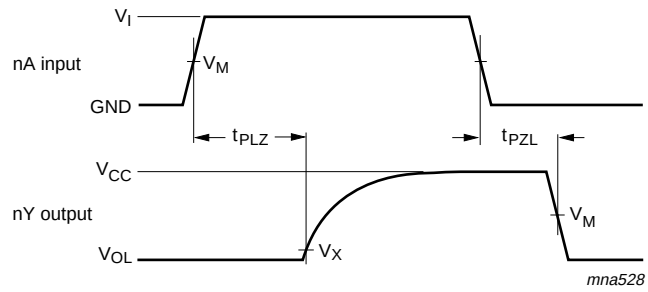

Measurement points are given in Table 10.

V_{OL} is typical output voltage drop that occurs with the output load.

Fig 6. The input (nA) to output (nY) propagation delays

© Koninklijke Philips Electronics N.V. 2005. All rights reserved.

Table 10: Measurement points

Supply voltage	Input		Output	
V_{CC}	V_M	V_I	V_M	V_X
1.65 V to 1.95 V	$0.5 \times V_{CC}$	V_{CC}	$0.5 \times V_{CC}$	V_{OL} + 0.15 V
2.3 V to 2.7 V	$0.5 \times V_{CC}$	V_{CC}	$0.5 \times V_{CC}$	V_{OL} + 0.15 V
2.7 V	1.5 V	2.7 V	1.5 V	V_{OL} + 0.3 V
3.0 V to 3.6 V	1.5 V	2.7 V	1.5 V	V_{OL} + 0.3 V
4.5 V to 5.5 V	$0.5 \times V_{CC}$	V_{CC}	$0.5 \times V_{CC}$	V_{OL} + 0.3 V

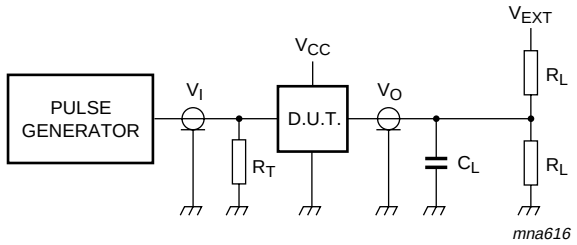

Test data are given in Table 11.

Definitions for test circuit:

R_L = Load resistor.

C_L = Load capacitance including jig and probe capacitance.

R_T = Termination resistance should be equal to the output impedance Z_o of the pulse generator.

Fig 7. Load circuitry for switching times

Table 11: Test data

Supply voltage	Input		Load		V_{EXT}
V_{CC}	V_I	$t_r = t_f$	C_L	R_L	t_{PZL}, t_{PLZ}
1.65 V to 1.95 V	V_{CC}	≤ 2.0 ns	30 pF	1 kΩ	$2 \times V_{CC}$
2.3 V to 2.7 V	V_{CC}	≤ 2.0 ns	30 pF	500 Ω	$2 \times V_{CC}$
2.7 V	2.7 V	≤ 2.5 ns	50 pF	500 Ω	6 V
3.0 V to 3.6 V	2.7 V	≤ 2.5 ns	50 pF	500 Ω	6 V
4.5 V to 5.5 V	V_{CC}	≤ 2.5 ns	50 pF	500 Ω	$2 \times V_{CC}$

© Koninklijke Philips Electronics N.V. 2005. All rights reserved.

14. Package outline

TSSOP8: plastic thin shrink small outline package; 8 leads; body width 3 mm; lead length 0.5 mm SOT505-2

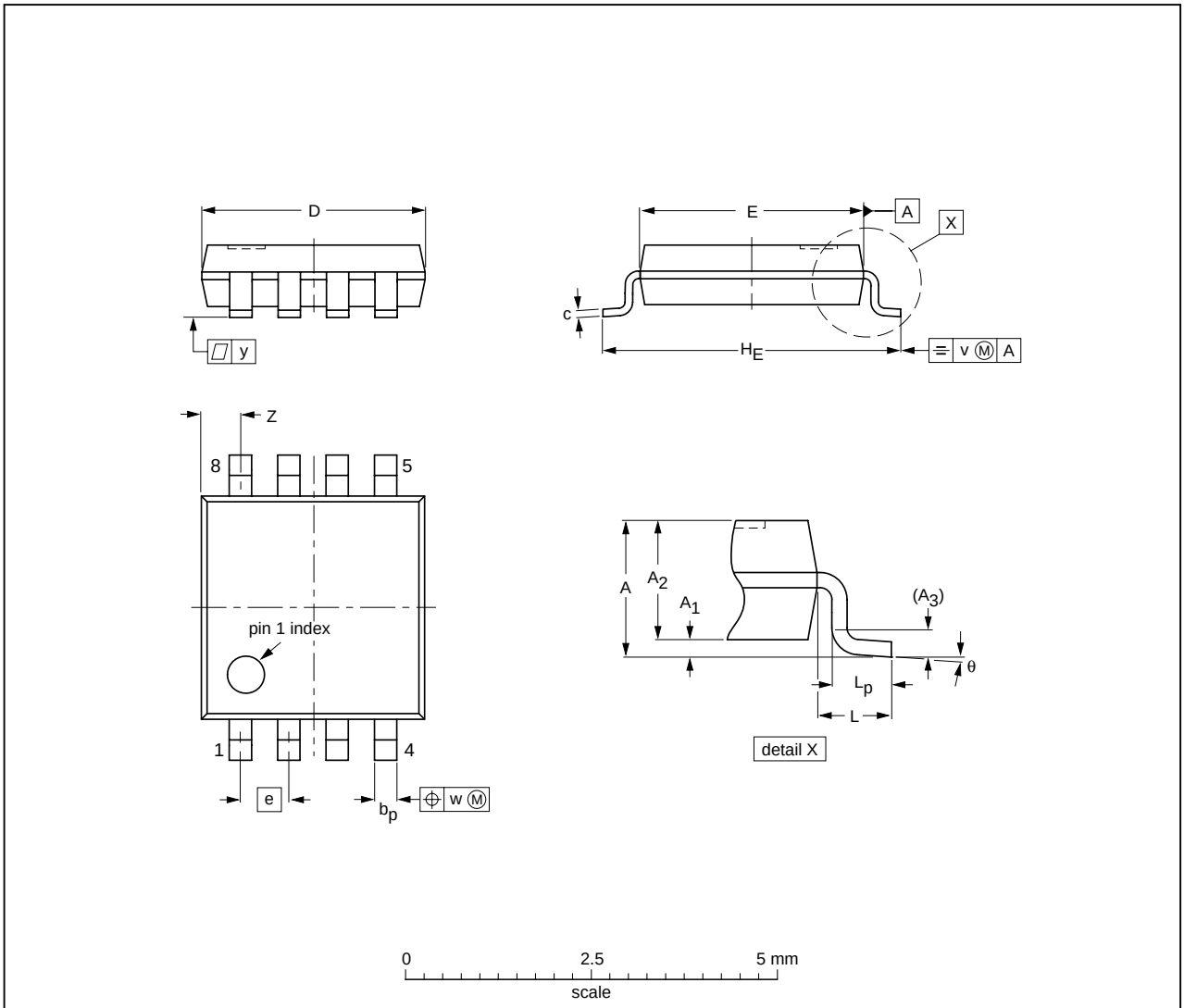

DIMENSIONS (mm are the original dimensions)

UNIT	A max.	A_1	A_2	A_3	b_p	c	$D^{(1)}$	$E^{(1)}$	e	H_E	L	L_p	v	w	y	$Z^{(1)}$	θ
mm	1.1	0.15 0.00	0.95 0.75	0.25	0.38 0.22	0.18 0.08	3.1 2.9	3.1 2.9	0.65	4.1 3.9	0.5	0.47 0.33	0.2	0.13	0.1	0.70 0.35	8° 0°

Note

1. Plastic or metal protrusions of 0.15 mm maximum per side are not included.

OUTLINE VERSION	REFERENCES				EUROPEAN PROJECTION	ISSUE DATE
	IEC	JEDEC	JEITA			
SOT505-2		- - -				02-01-16

Fig 8. Package outline SOT505-2 (TSSOP8)

© Koninklijke Philips Electronics N.V. 2005. All rights reserved.

VSSOP8: plastic very thin shrink small outline package; 8 leads; body width 2.3 mm **SOT765-1**

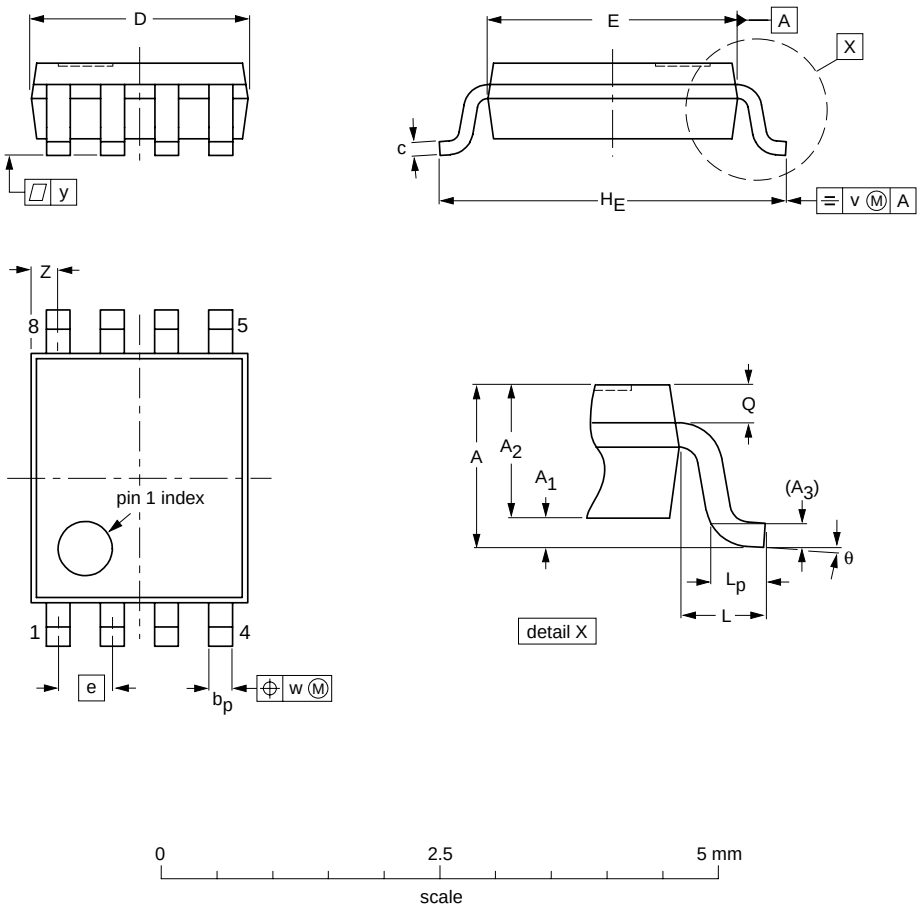

DIMENSIONS (mm are the original dimensions)

UNIT	A max.	A_1	A_2	A_3	b_p	c	$D^{(1)}$	$E^{(2)}$	e	H_E	L	L_p	Q	v	w	y	$Z^{(1)}$	θ
mm	1	0.15 0.00	0.85 0.60	0.12	0.27 0.17	0.23 0.08	2.1 1.9	2.4 2.2	0.5	3.2 3.0	0.4	0.40 0.15	0.21 0.19	0.2	0.13	0.1	0.4 0.1	8° 0°

Notes

1. Plastic or metal protrusions of 0.15 mm maximum per side are not included.
2. Plastic or metal protrusions of 0.25 mm maximum per side are not included.

OUTLINE VERSION	REFERENCES				EUROPEAN PROJECTION	ISSUE DATE
	IEC	JEDEC	JEITA			
SOT765-1		MO-187				02-06-07

Fig 9. Package outline SOT765-1 (VSSOP8)

© Koninklijke Philips Electronics N.V. 2005. All rights reserved.

XSON8: plastic extremely thin small outline package; no leads; 8 terminals; body 1 x 1.95 x 0.5 mm **SOT833-1**

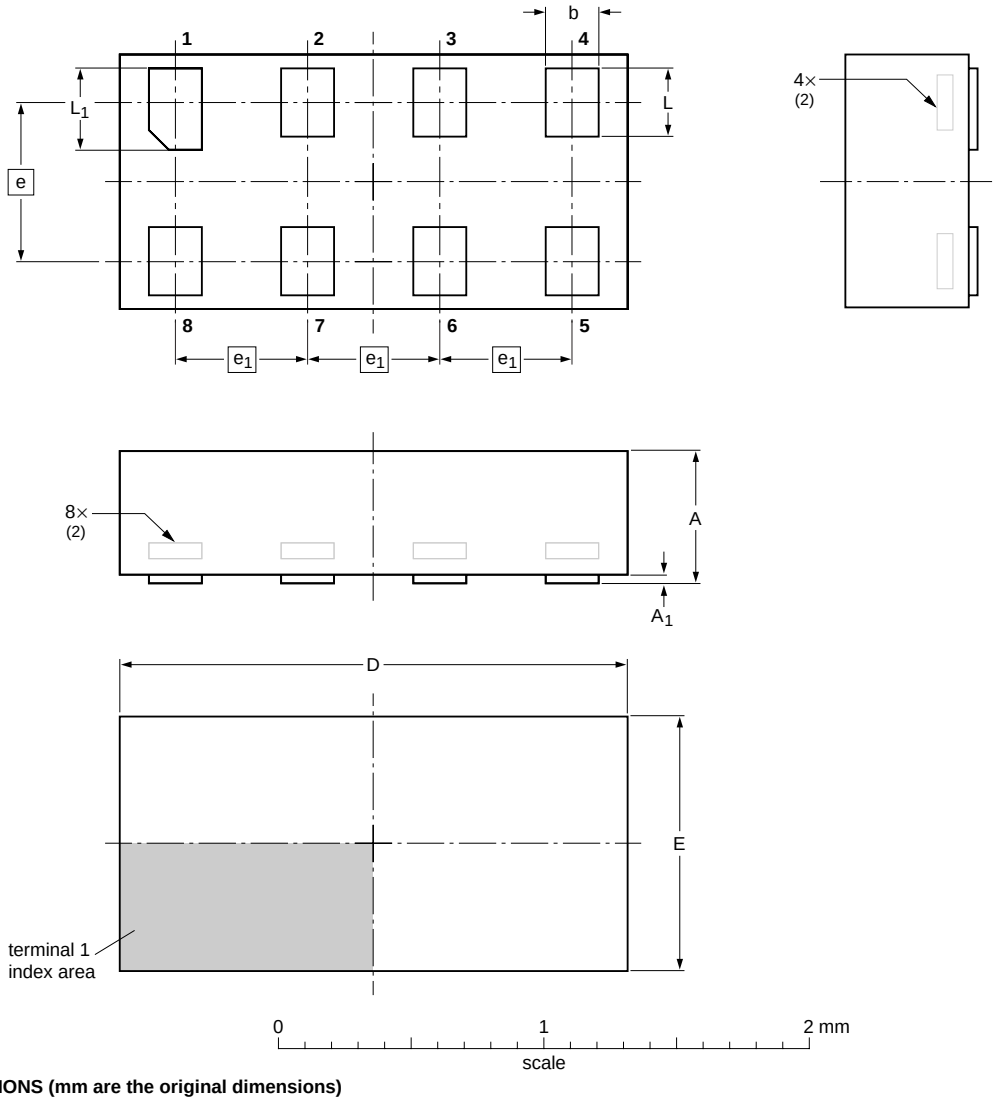

DIMENSIONS (mm are the original dimensions)

UNIT	A(1) max	A1 max	b	D	E	e	e1	L	L1
mm	0.5	0.04	0.25 0.17	2.0 1.9	1.05 0.95	0.6	0.5	0.35 0.27	0.40 0.32

Notes

1. Including plating thickness.
2. Can be visible in some manufacturing processes.

OUTLINE VERSION	REFERENCES				EUROPEAN PROJECTION	ISSUE DATE
	IEC	JEDEC	JEITA			
SOT833-1	- - -	MO-252	- - -			~~04-07-22~~ 04-11-09

Fig 10. Package outline SOT833-1 (XSON8)

© Koninklijke Philips Electronics N.V. 2005. All rights reserved.

15. Revision history

Table 12: Revision history

Document ID	Release date	Data sheet status	Change notice	Doc. number	Supersedes
74LVC3G07_3	20050201	Product data sheet	-	9397 750 14542	74LVC3G07_2
Modifications:	• Changed: type number 74LVC3G07GT (XSON8 package).				
74LVC3G07_2	20041027	Product data sheet	-	9397 750 13791	74LVC3G07_1
74LVC3G07_1	20040608	Product data sheet	-	9397 750 13267	-

© Koninklijke Philips Electronics N.V. 2005. All rights reserved.

16. Data sheet status

Level	Data sheet status [1]	Product status [2] [3]	Definition
I	Objective data	Development	This data sheet contains data from the objective specification for product development. Philips Semiconductors reserves the right to change the specification in any manner without notice.
II	Preliminary data	Qualification	This data sheet contains data from the preliminary specification. Supplementary data will be published at a later date. Philips Semiconductors reserves the right to change the specification without notice, in order to improve the design and supply the best possible product.
III	Product data	Production	This data sheet contains data from the product specification. Philips Semiconductors reserves the right to make changes at any time in order to improve the design, manufacturing and supply. Relevant changes will be communicated via a Customer Product/Process Change Notification (CPCN).

[1] Please consult the most recently issued data sheet before initiating or completing a design.

[2] The product status of the device(s) described in this data sheet may have changed since this data sheet was published. The latest information is available on the Internet at URL http://www.semiconductors.philips.com.

[3] For data sheets describing multiple type numbers, the highest-level product status determines the data sheet status.

17. Definitions

Short-form specification — The data in a short-form specification is extracted from a full data sheet with the same type number and title. For detailed information see the relevant data sheet or data handbook.

Limiting values definition — Limiting values given are in accordance with the Absolute Maximum Rating System (IEC 60134). Stress above one or more of the limiting values may cause permanent damage to the device. These are stress ratings only and operation of the device at these or at any other conditions above those given in the Characteristics sections of the specification is not implied. Exposure to limiting values for extended periods may affect device reliability.

Application information — Applications that are described herein for any of these products are for illustrative purposes only. Philips Semiconductors make no representation or warranty that such applications will be suitable for the specified use without further testing or modification.

18. Disclaimers

Life support — These products are not designed for use in life support appliances, devices, or systems where malfunction of these products can reasonably be expected to result in personal injury. Philips Semiconductors customers using or selling these products for use in such applications do so at their own risk and agree to fully indemnify Philips Semiconductors for any damages resulting from such application.

Right to make changes — Philips Semiconductors reserves the right to make changes in the products - including circuits, standard cells, and/or software - described or contained herein in order to improve design and/or performance. When the product is in full production (status ‘Production’), relevant changes will be communicated via a Customer Product/Process Change Notification (CPCN). Philips Semiconductors assumes no responsibility or liability for the use of any of these products, conveys no license or title under any patent, copyright, or mask work right to these products, and makes no representations or warranties that these products are free from patent, copyright, or mask work right infringement, unless otherwise specified.

19. Contact information

For additional information, please visit: **http://www.semiconductors.philips.com**

For sales office addresses, send an email to: **sales.addresses@www.semiconductors.philips.com**

© Koninklijke Philips Electronics N.V. 2005. All rights reserved.

20. Contents

1	**General description**	**1**
2	**Features**	**1**
3	**Quick reference data**	**2**
4	**Ordering information**	**2**
5	**Marking**	**2**
6	**Functional diagram**	**3**
7	**Pinning information**	**3**
7.1	Pinning	3
7.2	Pin description	4
8	**Functional description**	**4**
8.1	Function table	4
9	**Limiting values**	**4**
10	**Recommended operating conditions**	**5**
11	**Static characteristics**	**5**
12	**Dynamic characteristics**	**6**
13	**Waveforms**	**7**
14	**Package outline**	**9**
15	**Revision history**	**12**
16	**Data sheet status**	**13**
17	**Definitions**	**13**
18	**Disclaimers**	**13**
19	**Contact information**	**13**

© Koninklijke Philips Electronics N.V. 2005

All rights are reserved. Reproduction in whole or in part is prohibited without the prior written consent of the copyright owner. The information presented in this document does not form part of any quotation or contract, is believed to be accurate and reliable and may be changed without notice. No liability will be accepted by the publisher for any consequence of its use. Publication thereof does not convey nor imply any license under patent- or other industrial or intellectual property rights.

Date of release: 01 February 2005
Document number: 9397 750 14542

Published in The Netherlands