74LVC1G19

1-of-2 decoder/demultiplexer

Rev. 04 — 27 August 2007 Product data sheet

1. General description

The 74LVC1G19 is a 1-of-2 decoder/demultiplexer with a common output enable. This device buffers the data on input A and passes it to the outputs 1Y (true) and 2Y (complement) when the enable ($\overline{E}$) input signal is LOW.

Inputs can be driven from either 3.3 V or 5 V devices. These features allow the use of these devices in a mixed 3.3 V and 5 V environment.

This device is fully specified for partial power-down applications using I_{OFF}. The I_{OFF} circuitry disables the output, preventing the damaging backflow current through the device when it is powered down.

2. Features

- Wide supply voltage range from 1.65 V to 5.5 V
- 5 V tolerant inputs for interfacing with 5 V logic
- High noise immunity
- Complies with JEDEC standard:
  - JESD8-7 (1.65 V to 1.95 V)
  - JESD8-5 (2.3 V to 2.7 V)
  - JESD8B/JESD36 (2.7 V to 3.6 V)
- ESD protection:
  - HBM JESD22-A114E exceeds 2000 V
  - MM JESD22-A115-A exceeds 200 V
- ±24 mA output drive (V_{CC} = 3.0 V)
- CMOS low power consumption
- Latch-up performance exceeds 250 mA
- Direct interface with TTL levels
- Multiple package options
- Specified from –40 °C to +85 °C and –40 °C to +125 °C.

NXP founded by Philips

3. Ordering information

Table 1. Ordering information

Type number	Package			
	Temperature range	Name	Description	Version
74LVC1G19GW	–40 °C to +125 °C	SC-88	plastic surface-mounted package; 6 leads	SOT363
74LVC1G19GV	–40 °C to +125 °C	TSOP6	plastic surface-mounted package (TSOP6); 6 leads	SOT457
74LVC1G19GM	–40 °C to +125 °C	XSON6	plastic extremely thin small outline package; no leads; 6 terminals; body 1 × 1.45 × 0.5 mm	SOT886
74LVC1G19GF	–40 °C to +125 °C	XSON6	plastic extremely thin small outline package; no leads; 6 terminals; body 1 × 1 × 0.5 mm	SOT891

4. Marking

Table 2. Marking

Type number	Marking code
74LVC1G19GW	VY
74LVC1G19GV	V19
74LVC1G19GM	VY
74LVC1G19GF	VY

5. Functional diagram

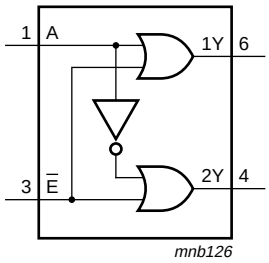

Fig 1. Logic symbol

© NXP B.V. 2007. All rights reserved.

6. Pinning information

6.1 Pinning

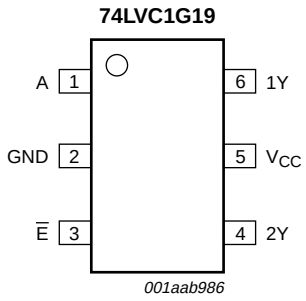

Fig 2. Pin configuration SOT363 and SOT457

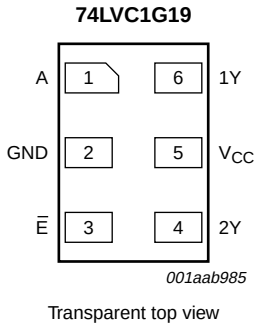

Fig 3. Pin configuration SOT886

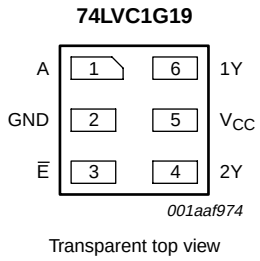

Fig 4. Pin configuration SOT891

6.2 Pin description

Table 3. Pin description

Symbol	Pin	Description
A	1	data input
GND	2	ground (0 V)
$\overline{E}$	3	enable input (active LOW)
2Y	4	data output
V_{CC}	5	supply voltage
1Y	6	data output

7. Functional description

Table 4. Function table[1]

Input		Output	
$\overline{E}$	A	1Y	2Y
L	L	L	H
L	H	H	L
H	X	H	H

[1] H = HIGH voltage level; L = LOW voltage level; X = don't care

© NXP B.V. 2007. All rights reserved.

8. Limiting values

Table 5. Limiting values

In accordance with the Absolute Maximum Rating System (IEC 60134). Voltages are referenced to GND (ground = 0 V).

Symbol	Parameter	Conditions		Min	Max	Unit
V_{CC}	supply voltage			–0.5	+6.5	V
I_{IK}	input clamping current	$V_I < 0$ V		–50	-	mA
V_I	input voltage		[1]	–0.5	+6.5	V
I_{OK}	output clamping current	$V_O > V_{CC}$ or $V_O < 0$ V		-	±50	mA
V_O	output voltage	Active mode	[1][2]	–0.5	V_{CC} + 0.5	V
		Power-down mode	[1][2]	–0.5	+6.5	V
I_O	output current	V_O = 0 V to V_{CC}		-	±50	mA
I_{CC}	supply current			-	100	mA
I_{GND}	ground current			–100	-	mA
P_{tot}	total power dissipation	T_{amb} = –40 °C to +125 °C	[3]	-	250	mW
T_{stg}	storage temperature			–65	+150	°C

[1] The input and output voltage ratings may be exceeded if the input and output current ratings are observed.

[2] When V_{CC} = 0 V (Power-down mode), the output voltage can be 5.5 V in normal operation.

[3] For SC-88 and SC-74A packages: above 87.5 °C the value of P_{tot} derates linearly with 4.0 mW/K.
For XSON6 packages: above 45 °C the value of P_{tot} derates linearly with 2.4 mW/K.

9. Recommended operating conditions

Table 6. Recommended operating conditions

Symbol	Parameter	Conditions	Min	Typ	Max	Unit
V_{CC}	supply voltage		1.65	-	5.5	V
V_I	input voltage		0	-	5.5	V
V_O	output voltage	Active mode	0	-	V_{CC}	V
		Power-down mode; V_{CC} = 0 V	0	-	5.5	V
T_{amb}	ambient temperature		–40	-	+125	°C
$\Delta t/\Delta V$	input transition rise and fall rate	V_{CC} = 1.65 V to 2.7 V	-	-	20	ns/V
		V_{CC} = 2.7 V to 5.5 V	-	-	10	ns/V

© NXP B.V. 2007. All rights reserved.

10. Static characteristics

Table 7. Static characteristics

At recommended operating conditions. Voltages are referenced to GND (ground = 0 V).

Symbol	Parameter	Conditions	Min	Typ[1]	Max	Unit
T_{amb} = −40 °C to +85 °C						
V_{IH}	HIGH-level input voltage	V_{CC} = 1.65 V to 1.95 V	0.65 × V_{CC}	-	-	V
		V_{CC} = 2.3 V to 2.7 V	1.7	-	-	V
		V_{CC} = 2.7 V to 3.6 V	2.0	-	-	V
		V_{CC} = 4.5 V to 5.5 V	0.7 × V_{CC}	-	-	V
V_{IL}	LOW-level input voltage	V_{CC} = 1.65 V to 1.95 V	-	-	0.35 × V_{CC}	V
		V_{CC} = 2.3 V to 2.7 V	-	-	0.7	V
		V_{CC} = 2.7 V to 3.6 V	-	-	0.8	V
		V_{CC} = 4.5 V to 5.5 V	-	-	0.3 × V_{CC}	V
V_{OH}	HIGH-level output voltage	V_I = V_{IH} or V_{IL}				
		I_O = −100 µA; V_{CC} = 1.65 V to 5.5 V	V_{CC} − 0.1	-	-	V
		I_O = −4 mA; V_{CC} = 1.65 V	1.2	1.54	-	V
		I_O = −8 mA; V_{CC} = 2.3 V	1.9	2.15	-	V
		I_O = −12 mA; V_{CC} = 2.7 V	2.2	2.50	-	V
		I_O = −24 mA; V_{CC} = 3.0 V	2.3	2.62	-	V
		I_O = −32 mA; V_{CC} = 4.5 V	3.8	4.11	-	V
V_{OL}	LOW-level output voltage	V_I = V_{IH} or V_{IL}				
		I_O = 100 µA; V_{CC} = 1.65 V to 5.5 V	-	-	0.10	V
		I_O = 4 mA; V_{CC} = 1.65 V	-	0.07	0.45	V
		I_O = 8 mA; V_{CC} = 2.3 V	-	0.12	0.30	V
		I_O = 12 mA; V_{CC} = 2.7 V	-	0.17	0.40	V
		I_O = 24 mA; V_{CC} = 3.0 V	-	0.33	0.55	V
		I_O = 32 mA; V_{CC} = 4.5 V	-	0.39	0.55	V
I_I	input leakage current	V_I = 5.5 V or GND; V_{CC} = 0 V to 5.5 V	-	±0.1	±5	µA
I_{OFF}	power-off leakage current	V_{CC} = 0 V; V_I or V_O = 5.5 V	-	±0.1	±10	µA
I_{CC}	supply current	V_I = 5.5 V or GND; V_{CC} = 1.65 V to 5.5 V; I_O = 0 A	-	0.1	10	µA
ΔI_{CC}	additional supply current	per pin; V_{CC} = 2.3 V to 5.5 V; V_I = V_{CC} − 0.6 V; I_O = 0 A	-	5	500	µA
C_I	input capacitance	V_{CC} = 3.3 V; V_I = GND to V_{CC}	-	2.5	-	pF

© NXP B.V. 2007. All rights reserved.

Table 7. Static characteristics *…continued*

At recommended operating conditions. Voltages are referenced to GND (ground = 0 V).

Symbol	Parameter	Conditions	Min	Typ[1]	Max	Unit
T_{amb} = −40 °C to +125 °C						
V_{IH}	HIGH-level input voltage	V_{CC} = 1.65 V to 1.95 V	0.65 × V_{CC}	-	-	V
		V_{CC} = 2.3 V to 2.7 V	1.7	-	-	V
		V_{CC} = 2.7 V to 3.6 V	2.0	-	-	V
		V_{CC} = 4.5 V to 5.5 V	0.7 × V_{CC}	-	-	V
V_{IL}	LOW-level input voltage	V_{CC} = 1.65 V to 1.95 V	-	-	0.35 × V_{CC}	V
		V_{CC} = 2.3 V to 2.7 V	-	-	0.7	V
		V_{CC} = 2.7 V to 3.6 V	-	-	0.8	V
		V_{CC} = 4.5 V to 5.5 V	-	-	0.3 × V_{CC}	V
V_{OH}	HIGH-level output voltage	V_I = V_{IH} or V_{IL}				
		I_O = −100 µA; V_{CC} = 1.65 V to 5.5 V	V_{CC} − 0.1	-	-	V
		I_O = −4 mA; V_{CC} = 1.65 V	0.95	-	-	V
		I_O = −8 mA; V_{CC} = 2.3 V	1.7	-	-	V
		I_O = −12 mA; V_{CC} = 2.7 V	1.9	-	-	V
		I_O = −24 mA; V_{CC} = 3.0 V	2.0	-	-	V
		I_O = −32 mA; V_{CC} = 4.5 V	3.4	-	-	V
V_{OL}	LOW-level output voltage	V_I = V_{IH} or V_{IL}				
		I_O = 100 µA; V_{CC} = 1.65 V to 5.5 V	-	-	0.10	V
		I_O = 4 mA; V_{CC} = 1.65 V	-	-	0.70	V
		I_O = 8 mA; V_{CC} = 2.3 V	-	-	0.45	V
		I_O = 12 mA; V_{CC} = 2.7 V	-	-	0.60	V
		I_O = 24 mA; V_{CC} = 3.0 V	-	-	0.80	V
		I_O = 32 mA; V_{CC} = 4.5 V	-	-	0.80	V
I_I	input leakage current	V_I = 5.5 V or GND; V_{CC} = 0 V to 5.5 V	-	-	±20	µA
I_{OFF}	power-off leakage current	V_{CC} = 0 V; V_I or V_O = 5.5 V	-	-	±20	µA
I_{CC}	supply current	V_I = 5.5 V or GND; V_{CC} = 1.65 V to 5.5 V; I_O = 0 A	-	-	40	µA
ΔI_{CC}	additional supply current	per pin; V_{CC} = 2.3 V to 5.5 V; V_I = V_{CC} − 0.6 V; I_O = 0 A	-	-	5000	µA

[1] All typical values are measured at V_{CC} = 3.3 V and T_{amb} = 25 °C.

© NXP B.V. 2007. All rights reserved.

11. Dynamic characteristics

Table 8. Dynamic characteristics

Voltages are referenced to GND (ground = 0 V). For test circuit see Figure 6.

Symbol	Parameter	Conditions		–40 °C to +85 °C			–40 °C to +125 °C		Unit
				Min	Typ[1]	Max	Min	Max	
t_{pd}	propagation delay	A, $\overline{E}$ to nY; see Figure 5	[2]						
		V_{CC} = 1.65 V to 1.95 V		1.0	4.0	10.5	1.0	13.1	ns
		V_{CC} = 2.3 V to 2.7 V		0.5	2.5	6.2	0.5	7.7	ns
		V_{CC} = 2.7 V		1.0	2.8	6.5	1.0	8.1	ns
		V_{CC} = 3.0 V to 3.6 V		0.5	2.5	5.2	0.5	6.0	ns
		V_{CC} = 4.5 V to 5.5 V		0.5	1.8	3.9	0.5	5.0	ns
C_{PD}	power dissipation capacitance	V_I = GND to V_{CC}; V_{CC} = 3.3 V	[3]	-	18.9	-	-	-	pF

[1] Typical values are measured at T_{amb} = 25 °C and V_{CC} = 1.8 V, 2.5 V, 2.7 V, 3.3 V and 5.0 V respectively.

[2] t_{pd} is the same as t_{PLH} and t_{PHL}.

[3] C_{PD} is used to determine the dynamic power dissipation (P_D in µW).
$P_D = C_{PD} \times V_{CC}^2 \times f_i \times N + \Sigma(C_L \times V_{CC}^2 \times f_o)$ where:
f_i = input frequency in MHz;
f_o = output frequency in MHz;
C_L = output load capacitance in pF;
V_{CC} = supply voltage in V;
N = number of inputs switching;
$\Sigma(C_L \times V_{CC}^2 \times f_o)$ = sum of outputs.

12. AC waveforms

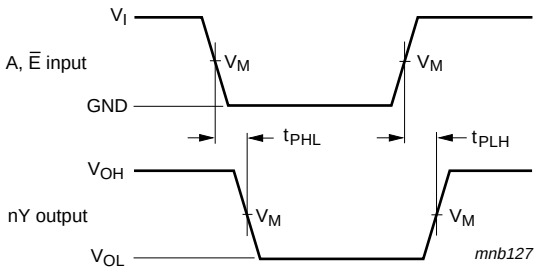

Measurement points are given in Table 9.

V_{OL} and V_{OH} are typical output voltage levels that occur with the output load.

Fig 5. The input A, $\overline{E}$ to output nY propagation delays

© NXP B.V. 2007. All rights reserved.

Table 9. Measurement points

Supply voltage	Input	Output
V_{CC}	V_M	V_M
1.65 V to 1.95 V	$0.5 \times V_{CC}$	$0.5 \times V_{CC}$
2.3 V to 2.7 V	$0.5 \times V_{CC}$	$0.5 \times V_{CC}$
2.7 V	1.5 V	1.5 V
3.0 V to 3.6 V	1.5 V	1.5 V
4.5 V to 5.5 V	$0.5 \times V_{CC}$	$0.5 \times V_{CC}$

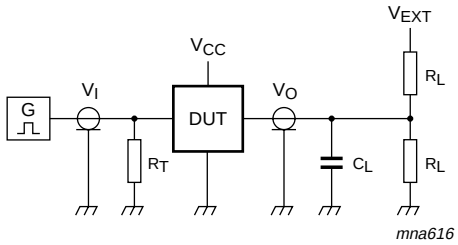

Test data is given in Table 10.

Definitions for test circuit:

R_L = Load resistance.

C_L = Load capacitance including jig and probe capacitance.

R_T = Termination resistance should be equal to the output impedance Z_o of the pulse generator.

V_{EXT} = External voltage for measuring switching times.

Fig 6. Load circuitry for switching times

Table 10. Test data

Supply voltage	Input		Load		V_{EXT}
V_{CC}	V_I	$t_r = t_f$	C_L	R_L	t_{PLH}, t_{PHL}
1.65 V to 1.95 V	V_{CC}	≤ 2.0 ns	30 pF	1 kΩ	open
2.3 V to 2.7 V	V_{CC}	≤ 2.0 ns	30 pF	500 Ω	open
2.7 V	2.7 V	≤ 2.5 ns	50 pF	500 Ω	open
3.0 V to 3.6 V	2.7 V	≤ 2.5 ns	50 pF	500 Ω	open
4.5 V to 5.5 V	V_{CC}	≤ 2.5 ns	50 pF	500 Ω	open

© NXP B.V. 2007. All rights reserved.

13. Package outline

Plastic surface-mounted package; 6 leads **SOT363**

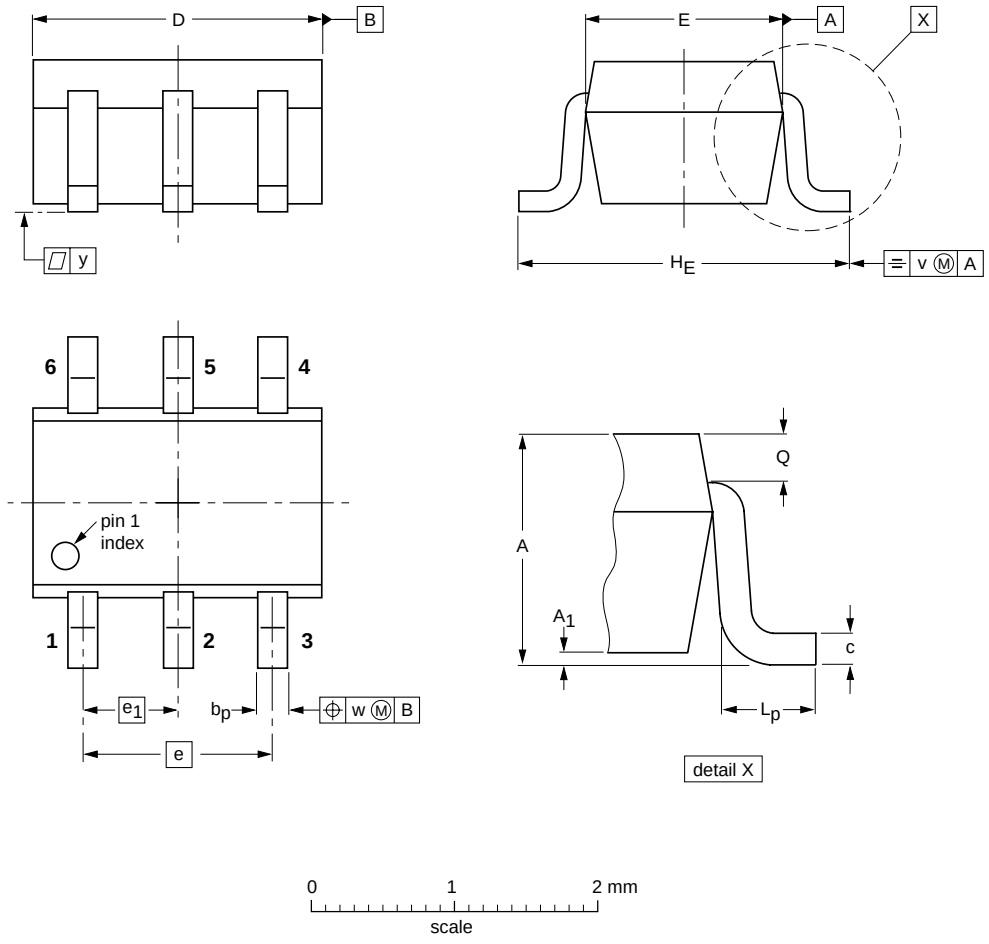

DIMENSIONS (mm are the original dimensions)

UNIT	A	A_1 max	b_p	c	D	E	e	e_1	H_E	L_p	Q	v	w	y
mm	1.1 0.8	0.1	0.30 0.20	0.25 0.10	2.2 1.8	1.35 1.15	1.3	0.65	2.2 2.0	0.45 0.15	0.25 0.15	0.2	0.2	0.1

OUTLINE VERSION	REFERENCES				EUROPEAN PROJECTION	ISSUE DATE
	IEC	JEDEC	JEITA			
SOT363			SC-88			~~04-11-08~~ 06-03-16

Fig 7. Package outline SOT363 (SC-88)

© NXP B.V. 2007. All rights reserved.

Plastic surface-mounted package (TSOP6); 6 leads **SOT457**

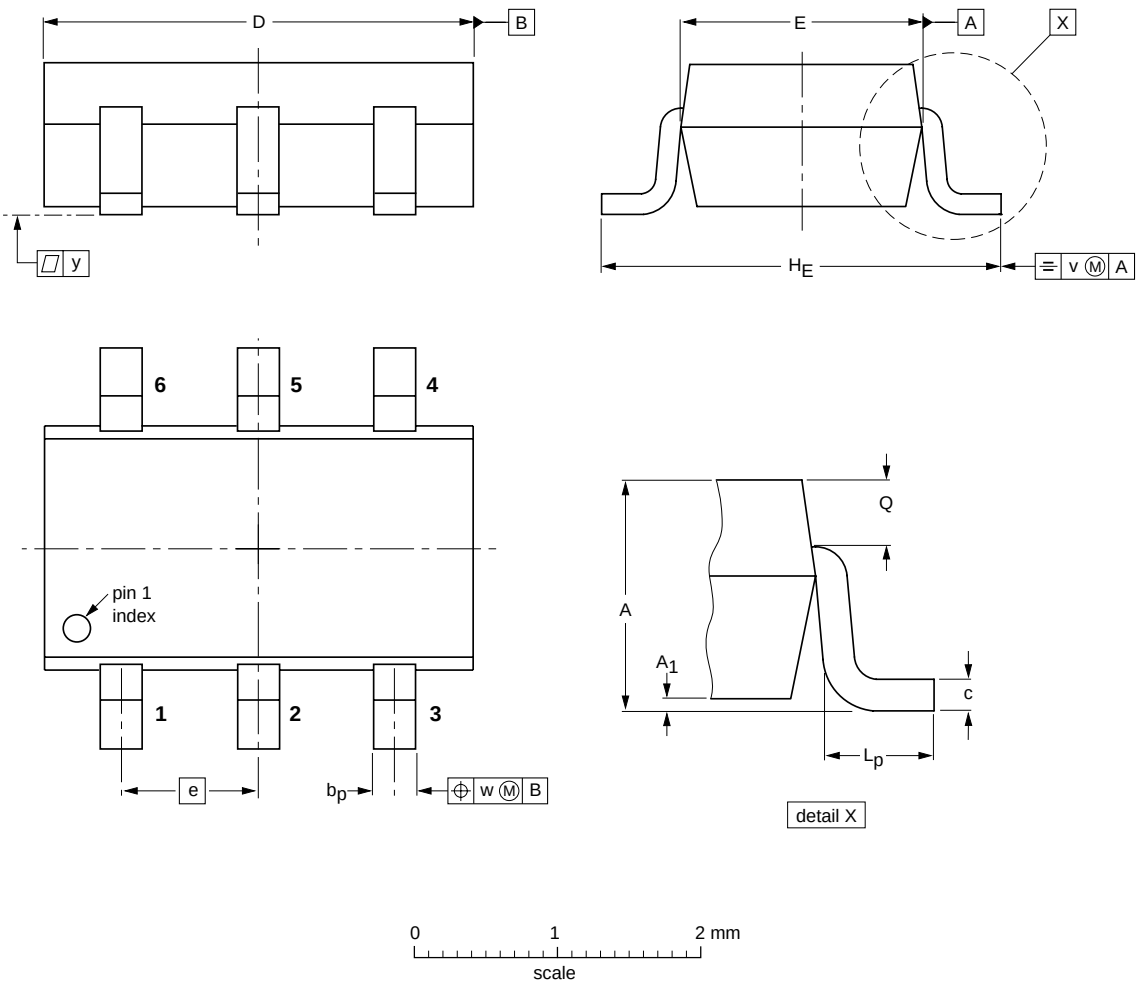

DIMENSIONS (mm are the original dimensions)

UNIT	A	A_1	b_p	c	D	E	e	H_E	L_p	Q	v	w	y
mm	1.1 0.9	0.1 0.013	0.40 0.25	0.26 0.10	3.1 2.7	1.7 1.3	0.95	3.0 2.5	0.6 0.2	0.33 0.23	0.2	0.2	0.1

OUTLINE VERSION	REFERENCES				EUROPEAN PROJECTION	ISSUE DATE
	IEC	JEDEC	JEITA			
SOT457			SC-74			~~05-11-07~~ 06-03-16

Fig 8. Package outline SOT457 (TSOP6)

© NXP B.V. 2007. All rights reserved.

XSON6: plastic extremely thin small outline package; no leads; 6 terminals; body 1 x 1.45 x 0.5 mm **SOT886**

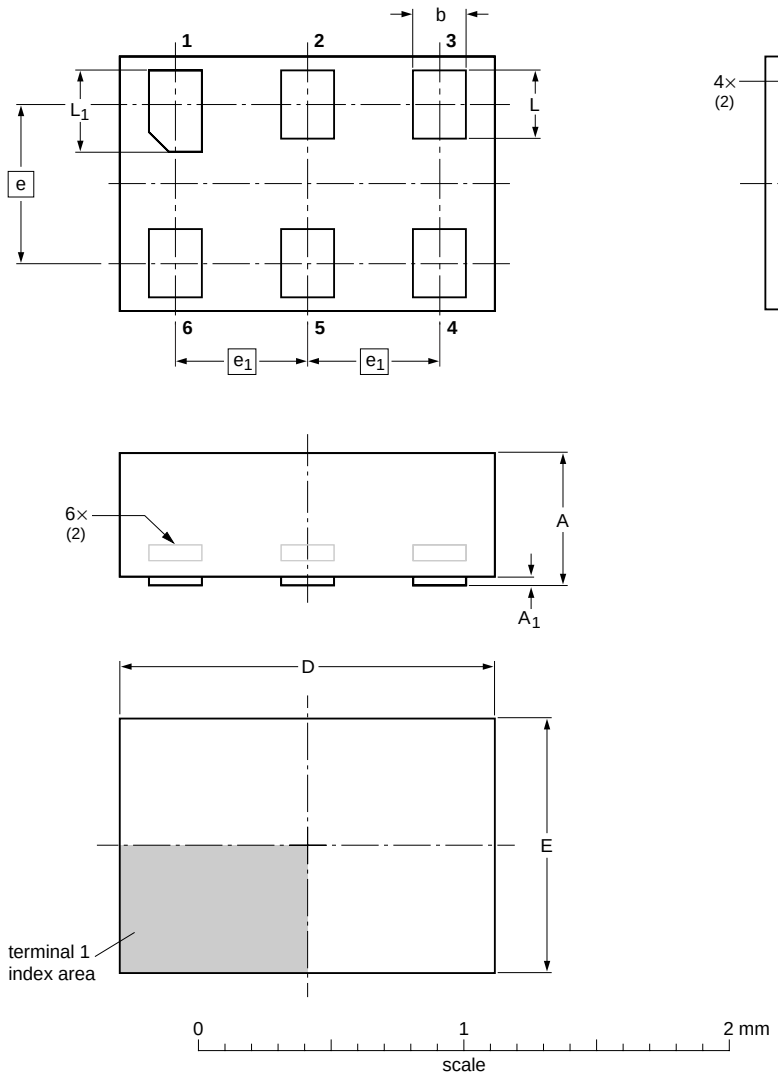

DIMENSIONS (mm are the original dimensions)

UNIT	A(1) max	A1 max	b	D	E	e	e1	L	L1
mm	0.5	0.04	0.25 0.17	1.5 1.4	1.05 0.95	0.6	0.5	0.35 0.27	0.40 0.32

Notes

1. Including plating thickness.
2. Can be visible in some manufacturing processes.

OUTLINE VERSION	REFERENCES				EUROPEAN PROJECTION	ISSUE DATE
	IEC	JEDEC	JEITA			
SOT886		MO-252				~~04-07-15~~ 04-07-22

Fig 9. Package outline SOT886 (XSON6)

© NXP B.V. 2007. All rights reserved.

XSON6: plastic extremely thin small outline package; no leads; 6 terminals; body 1 x 1 x 0.5 mm **SOT891**

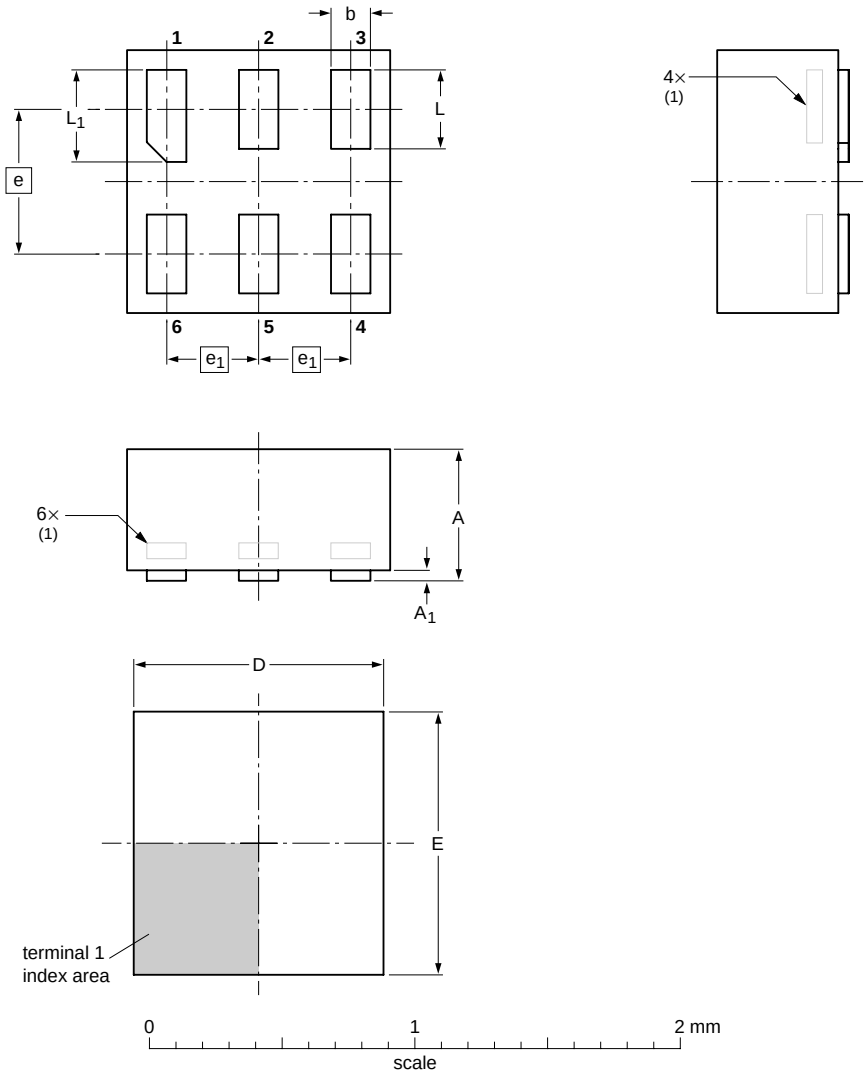

DIMENSIONS (mm are the original dimensions)

UNIT	A max	A_1 max	b	D	E	e	e_1	L	L_1
mm	0.5	0.04	0.20 0.12	1.05 0.95	1.05 0.95	0.55	0.35	0.35 0.27	0.40 0.32

Note

1. Can be visible in some manufacturing processes.

OUTLINE VERSION	REFERENCES				EUROPEAN PROJECTION	ISSUE DATE
	IEC	JEDEC	JEITA			
SOT891						~~05-04-06~~ 07-05-15

Fig 10. Package outline SOT891 (XSON6)

© NXP B.V. 2007. All rights reserved.

14. Abbreviations

Table 11. Abbreviations

Acronym	Description
CMOS	Complementary Metal Oxide Semiconductor
DUT	Device Under Test
ESD	ElectroStatic Discharge
HBM	Human Body Model
MM	Machine Model
TTL	Transistor-Transistor Logic

15. Revision history

Table 12. Revision history

Document ID	Release date	Data sheet status	Change notice	Supersedes
74LVC1G19_4	20070827	Product data sheet	-	74LVC1G19_3
Modifications:	• In Section 10 “Static characteristics”, changed conditions for input leakage and supply current. • Figure 10 “Package outline SOT891 (XSON6)” updated.			
74LVC1G19_3	20070221	Product data sheet	-	74LVC1G19_2
74LVC1G19_2	20041018	Product specification	-	74LVC1G19_1
74LVC1G19_1	20030901	Product specification	-	-

© NXP B.V. 2007. All rights reserved.

16. Legal information

16.1 Data sheet status

Document status[1][2]	Product status[3]	Definition
Objective [short] data sheet	Development	This document contains data from the objective specification for product development.
Preliminary [short] data sheet	Qualification	This document contains data from the preliminary specification.
Product [short] data sheet	Production	This document contains the product specification.

[1] Please consult the most recently issued document before initiating or completing a design.

[2] The term 'short data sheet' is explained in section "Definitions".

[3] The product status of device(s) described in this document may have changed since this document was published and may differ in case of multiple devices. The latest product status information is available on the Internet at URL http://www.nxp.com.

16.2 Definitions

Draft — The document is a draft version only. The content is still under internal review and subject to formal approval, which may result in modifications or additions. NXP Semiconductors does not give any representations or warranties as to the accuracy or completeness of information included herein and shall have no liability for the consequences of use of such information.

Short data sheet — A short data sheet is an extract from a full data sheet with the same product type number(s) and title. A short data sheet is intended for quick reference only and should not be relied upon to contain detailed and full information. For detailed and full information see the relevant full data sheet, which is available on request via the local NXP Semiconductors sales office. In case of any inconsistency or conflict with the short data sheet, the full data sheet shall prevail.

16.3 Disclaimers

General — Information in this document is believed to be accurate and reliable. However, NXP Semiconductors does not give any representations or warranties, expressed or implied, as to the accuracy or completeness of such information and shall have no liability for the consequences of use of such information.

Right to make changes — NXP Semiconductors reserves the right to make changes to information published in this document, including without limitation specifications and product descriptions, at any time and without notice. This document supersedes and replaces all information supplied prior to the publication hereof.

Suitability for use — NXP Semiconductors products are not designed, authorized or warranted to be suitable for use in medical, military, aircraft, space or life support equipment, nor in applications where failure or malfunction of a NXP Semiconductors product can reasonably be expected to result in personal injury, death or severe property or environmental damage. NXP Semiconductors accepts no liability for inclusion and/or use of NXP Semiconductors products in such equipment or applications and therefore such inclusion and/or use is at the customer's own risk.

Applications — Applications that are described herein for any of these products are for illustrative purposes only. NXP Semiconductors makes no representation or warranty that such applications will be suitable for the specified use without further testing or modification.

Limiting values — Stress above one or more limiting values (as defined in the Absolute Maximum Ratings System of IEC 60134) may cause permanent damage to the device. Limiting values are stress ratings only and operation of the device at these or any other conditions above those given in the Characteristics sections of this document is not implied. Exposure to limiting values for extended periods may affect device reliability.

Terms and conditions of sale — NXP Semiconductors products are sold subject to the general terms and conditions of commercial sale, as published at http://www.nxp.com/profile/terms, including those pertaining to warranty, intellectual property rights infringement and limitation of liability, unless explicitly otherwise agreed to in writing by NXP Semiconductors. In case of any inconsistency or conflict between information in this document and such terms and conditions, the latter will prevail.

No offer to sell or license — Nothing in this document may be interpreted or construed as an offer to sell products that is open for acceptance or the grant, conveyance or implication of any license under any copyrights, patents or other industrial or intellectual property rights.

16.4 Trademarks

Notice: All referenced brands, product names, service names and trademarks are the property of their respective owners.

17. Contact information

For additional information, please visit: **http://www.nxp.com**

For sales office addresses, send an email to: **salesaddresses@nxp.com**

© NXP B.V. 2007. All rights reserved.

18. Contents

1	**General description**	**1**
2	**Features**	**1**
3	**Ordering information**	**2**
4	**Marking**	**2**
5	**Functional diagram**	**2**
6	**Pinning information**	**3**
6.1	Pinning	3
6.2	Pin description	3
7	**Functional description**	**3**
8	**Limiting values**	**4**
9	**Recommended operating conditions**	**4**
10	**Static characteristics**	**5**
11	**Dynamic characteristics**	**7**
12	**AC waveforms**	**7**
13	**Package outline**	**9**
14	**Abbreviations**	**13**
15	**Revision history**	**13**
16	**Legal information**	**14**
16.1	Data sheet status	14
16.2	Definitions	14
16.3	Disclaimers	14
16.4	Trademarks	14
17	**Contact information**	**14**
18	**Contents**	**15**

Please be aware that important notices concerning this document and the product(s) described herein, have been included in section 'Legal information'.

© NXP B.V. 2007. All rights reserved.

For more information, please visit: http://www.nxp.com
For sales office addresses, please send an email to: salesaddresses@nxp.com

Date of release: 27 August 2007
Document identifier: 74LVC1G19_4

founded by

PHILIPS