DATA SHEET

74LVC109

Dual J$\overline{K}$ flip-flop with set and reset; positive-edge trigger

Product specification
Supersedes data of 1997 Mar 18
IC24 Data Handbook

1998 Apr 28

Philips
Semiconductors

PHILIPS

Dual J$\overline{K}$ flip-flop with set and reset; positive-edge trigger 74LVC109

FEATURES

- Wide supply voltage range of 1.2 to 3.6 V
- In accordance with JEDEC standard no. 8-1A.
- Inputs accept voltages up to 5.5 V
- CMOS low power consumption
- Direct interface with TTL levels
- Output capability: standard
- I_{CC} category: flip-flops

DESCRIPTION

The 74LVC109 is a low-voltage Si-gate CMOS device that is pin and function compatible with 74HC/HCT109.

The 74LVC109 is a dual positive-edge triggered J$\overline{K}$-type flip-flop featuring individual J, $\overline{K}$ inputs, clock (CP) inputs, set ($\overline{S}_D$) and reset ($\overline{R}_D$) inputs; also complementary Q and $\overline{Q}$ outputs.

The set and reset are asynchronous active LOW inputs and operate independently of the clock input.

The J and $\overline{K}$ inputs control the state changes of the flip-flops as described in the mode select function table. The J and $\overline{K}$ inputs must be stable one set-up time prior to the LOW-to-HIGH clock transition for predictable operation. The J$\overline{K}$ design allows operation as a D-type flip-flop by tying the J and $\overline{K}$ inputs together.

Schmitt-trigger action in the clock input makes the circuit highly tolerant to slower clock rise and fall times.

QUICK REFERENCE DATA

GND = 0 V; T_{amb} = 25°C; $t_r = t_f \leq 2.5$ ns

SYMBOL	PARAMETER	CONDITIONS	TYPICAL	UNIT
t_{PHL}/t_{PLH}	Propagation delay nCP to nQ, n$\overline{Q}$ n$\overline{S}_D$ to nQ, n$\overline{Q}$ n$\overline{R}_D$ to nQ, n$\overline{Q}$	C_L = 50 pF; V_{CC} = 3.3 V	4.0 4.5 4.5	ns
f_{max}	Maximum clock frequency		250	MHz
C_I	Input capacitance		5.0	pF
C_{PD}	Power dissipation capacitance per flip-flop	V_I = GND to V_{CC}[1]	27	pF

NOTE:

1. C_{PD} is used to determine the dynamic power dissipation (P_D in μW)
   $P_D = C_{PD} \times V_{CC}^2 \times f_i + \Sigma (C_L \times V_{CC}^2 \times f_o)$ where:
   f_i = input frequency in MHz; C_L = output load capacity in pF;
   f_o = output frequency in MHz; V_{CC} = supply voltage in V;
   $\Sigma (C_L \times V_{CC}^2 \times f_o)$ = sum of the outputs.

ORDERING INFORMATION

PACKAGES	TEMPERATURE RANGE	OUTSIDE NORTH AMERICA	NORTH AMERICA	PKG. DWG. #
16-Pin Plastic SO	–40°C to +85°C	74LVC109 D	74LVC109 D	SOT109-1
16-Pin Plastic SSOP Type II	–40°C to +85°C	74LVC109 DB	74LVC109 DB	SOT338-1
16-Pin Plastic TSSOP Type I	–40°C to +85°C	74LVC109 PW	74LVC109PW DH	SOT403-1

PIN CONFIGURATION

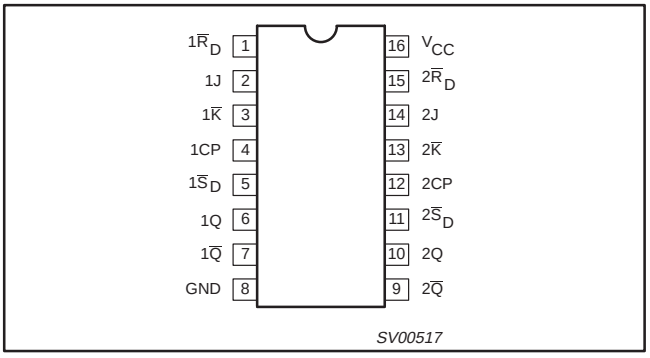

PIN DESCRIPTION

PIN NUMBER	SYMBOL	FUNCTION
1, 15	1$\overline{R}_D$, 2$\overline{R}_D$	Asynchronous reset input (active LOW)
2, 14, 3, 13	1J, 2J, 1$\overline{K}$, 2$\overline{K}$	Synchronous inputs; flip-flops 1 and 2
4, 12	1CP, 2CP	Clock input (LOW-to-HIGH, edge-triggered)
5, 11	1$\overline{S}_D$, 2$\overline{S}_D$	Asynchronous set inputs (active LOW)
6, 10	1Q, 2Q	True flip-flop outputs
7, 9	1$\overline{Q}$, 2$\overline{Q}$	Complement flip-flop outputs
8	GND	Ground (O V)
16	V_{CC}	Positive supply voltage

LOGIC SYMBOL (IEEE/IEC)

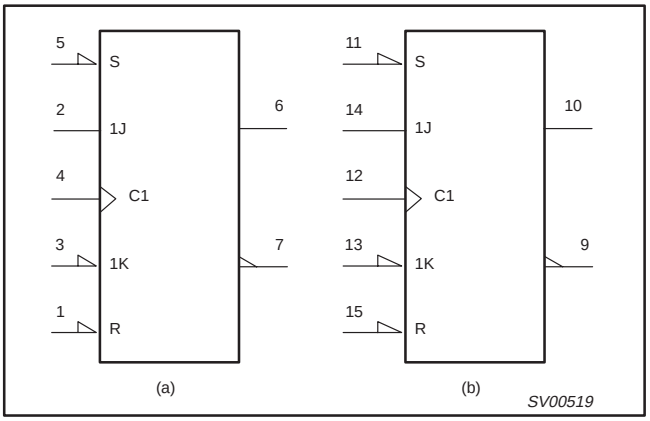

FUNCTIONAL DIAGRAM

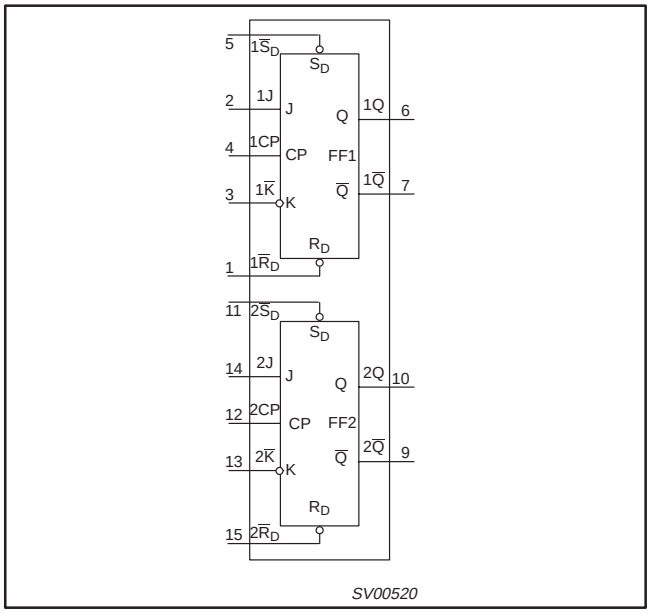

LOGIC SYMBOL

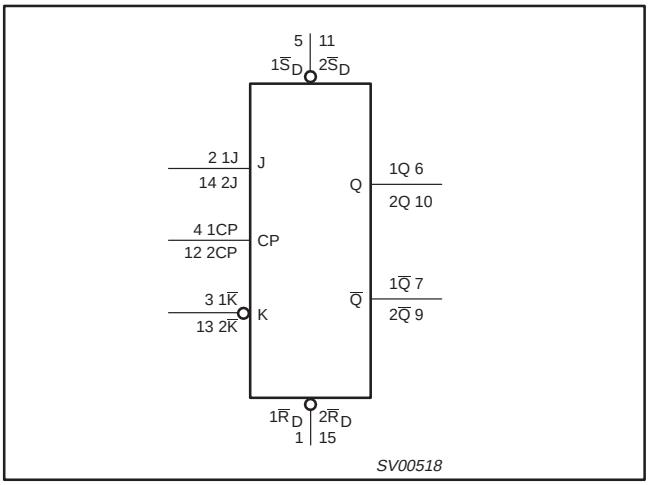

LOGIC DIAGRAM

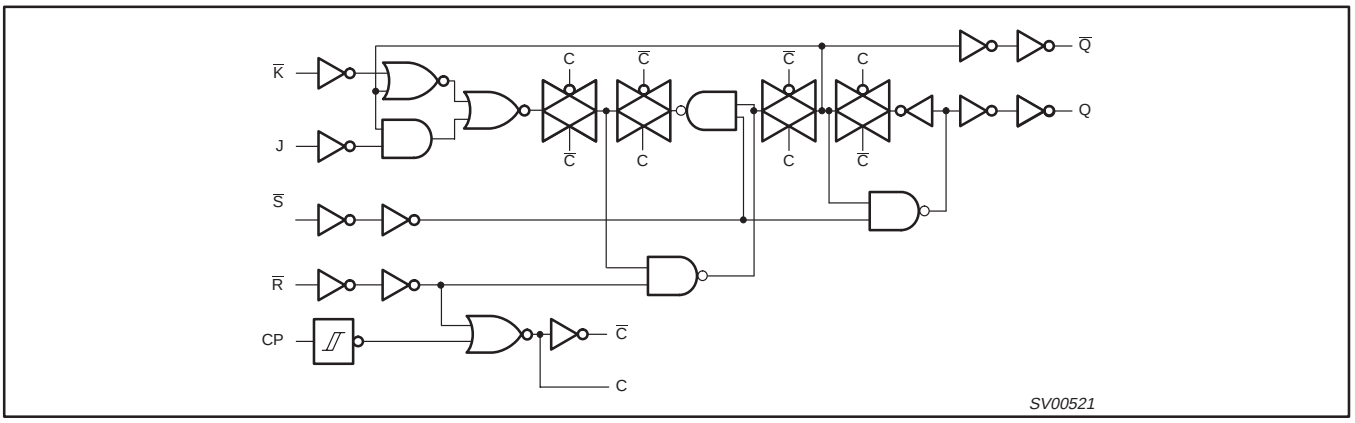

FUNCTION TABLE

OPERATING MODES	INPUTS					OUTPUTS	
	$n\overline{S}_D$	$n\overline{R}_D$	nCP	nJ	$n\overline{K}$	nQ	$n\overline{Q}$
Asynchronous set	L	H	X	X	X	H	L
Asynchronous reset	H	L	X	X	X	L	H
Undetermined	L	L	X	X	X	H	H
Toggle	H	H	↑	h	l	$\overline{q}$	q
Load “0” (reset)	H	H	↑	l	l	L	H
Load “1” (set)	H	H	↑	h	h	H	L
Hold “no change”	H	H	↑	l	h	q	$\overline{q}$

NOTES:
H = HIGH voltage level
h = HIGH voltage level one set-up time prior to the LOW-to-HIGH CP transition
L = LOW voltage level
l = LOW voltage level one set-up time prior to the LOW-to-HIGH CP transition
q = lower case letters indicate the state of the referenced output one set-up time prior to the LOW-to-HIGH CP transition.
X = don’t care
↑ = LOW-to-HIGH CP transition

RECOMMENDED OPERATING CONDITIONS

SYMBOL	PARAMETER	CONDITIONS	LIMITS		UNIT
			MIN	MAX	
V_{CC}	DC supply voltage (for max. speed performance)		2.7	3.6	V
	DC supply voltage (for low-voltage applications)		1.2	3.6	
V_I	DC input voltage range		0	5.5	V
V_O	DC output voltage range		0	V_{CC}	V
T_{amb}	Operating free-air temperature range		–40	+85	°C
t_r, t_f	Input rise and fall times	V_{CC} = 1.2 to 2.7V V_{CC} = 2.7 to 3.6V	0 0	20 10	ns/V

ABSOLUTE MAXIMUM RATINGS[1]

In accordance with the Absolute Maximum Rating System (IEC 134).
Voltages are referenced to GND (ground = 0V).

SYMBOL	PARAMETER	CONDITIONS	RATING	UNIT
V_{CC}	DC supply voltage		–0.5 to +6.5	V
I_{IK}	DC input diode current	$V_I < 0$	–50	mA
V_I	DC input voltage	Note 2	–0.5 to +5.5	V
I_{OK}	DC output diode current	$V_O > V_{CC}$ or $V_O < 0$	±50	mA
V_O	DC output voltage	Note 2	–0.5 to V_{CC} +0.5	V
I_O	DC output source or sink current	V_O = 0 to V_{CC}	±50	mA
I_{GND}, I_{CC}	DC V_{CC} or GND current		±100	mA
T_{stg}	Storage temperature range		–65 to +150	°C
P_{TOT}	Power dissipation per package – plastic mini-pack (SO) – plastic shrink mini-pack (SSOP and TSSOP)	 above +70°C derate linearly with 8 mW/K above +60°C derate linearly with 5.5 mW/K	 500 500	mW

NOTES:
1. Stresses beyond those listed may cause permanent damage to the device. These are stress ratings only and functional operation of the device at these or any other conditions beyond those indicated under “recommended operating conditions” is not implied. Exposure to absolute-maximum-rated conditions for extended periods may affect device reliability.
2. The input and output voltage ratings may be exceeded if the input and output current ratings are observed.

DC ELECTRICAL CHARACTERISTICS

Over recommended operating conditions. Voltages are referenced to GND (ground = 0V).

SYMBOL	PARAMETER	TEST CONDITIONS	LIMITS			UNIT
			Temp = -40°C to +85°C			
			MIN	TYP[1]	MAX	
V_{IH}	HIGH level Input voltage	V_{CC} = 1.2V	V_{CC}			V
		V_{CC} = 2.7 to 3.6V	2.0			
V_{IL}	LOW level Input voltage	V_{CC} = 1.2V			GND	V
		V_{CC} = 2.7 to 3.6V			0.8	
V_{OH}	HIGH level output voltage	V_{CC} = 2.7V; V_I = V_{IH} or V_{IL}; I_O = –12mA	V_{CC} – 0.5			V
		V_{CC} = 3.0V; V_I = V_{IH} or V_{IL}; I_O = –100µA	V_{CC} – 0.2	V_{CC}		
		V_{CC} = 3.0V; V_I = V_{IH} or V_{IL}; I_O = –12mA	V_{CC} – 0.6			
		V_{CC} = 3.0V; V_I = V_{IH} or V_{IL}; I_O = –24mA	V_{CC} – 1.0			
V_{OL}	LOW level output voltage	V_{CC} = 2.7V; V_I = V_{IH} or V_{IL}; I_O = 12mA			0.40	V
		V_{CC} = 3.0V; V_I = V_{IH} or V_{IL}; I_O = 100µA		GND	0.20	
		V_{CC} = 3.0V; V_I = V_{IH} or V_{IL}; I_O = 24mA			0.55	
I_I	Input leakage current	V_{CC} = 3.6V; V_I = 5.5V or GND		±0.1	±5	µA
I_{CC}	Quiescent supply current	V_{CC} = 3.6V; V_I = V_{CC} or GND; I_O = 0		0.1	10	µA
ΔI_{CC}	Additional quiescent supply current per input pin	V_{CC} = 2.7V to 3.6V; V_I = V_{CC} –0.6V; I_O = 0		5	500	µA

NOTE:
1. All typical values are at V_{CC} = 3.3V and T_{amb} = 25°C.

AC CHARACTERISTICS

GND = 0 V; $t_r = t_f \leq$ 2.5 ns; C_L = 50 pF; R_L = 500Ω; T_{amb} = –40°C to +85°C

SYMBOL	PARAMETER	WAVEFORM	LIMITS						UNIT
			V_{CC} = 3.3V ±0.3V			V_{CC} = 2.7V			
			MIN	TYP[1]	MAX	MIN	TYP NO TAG	MAX	
t_{PHL}/t_{PLH}	Propagation delay nCP to nQ, n$\overline{Q}$	Figures 1, 3		4.3	7.5			8.5	ns
t_{PLH}	Propagation delay n$\overline{S}_D$ to nQ n$\overline{R}_D$ to n$\overline{Q}$	Figures 2, 3		4.5	8.0			9.0	ns
t_{PHL}	Propagation delay n$\overline{S}_D$ to n$\overline{Q}$ n$\overline{R}_D$ to nQ	Figures 2, 3		5.2	9.0			10	ns
t_W	Clock pulse width HIGH or LOW	Figure 1	3.3	2.0					ns
t_W	Set or reset pulse width HIGH or LOW	Figure 2	3.0						ns
t_{rem}	Removal time n$\overline{S}_D$, n$\overline{R}_D$ to nCP	Figure 2	3.0						ns
t_{su}	Set-up time nJ, n$\overline{K}$ to CP	Figure 1	2.5						ns
t_h	Hold time nJ, n$\overline{K}$ to nCP	Figure 1	2.0						ns
f_{max}	Maximum clock pulse frequency	Figure 1	150	225					MHz

NOTE:
1. These typical values are at V_{CC} = 3.3V and T_{amb} = 25°C.

AC WAVEFORMS

V_M = 1.5 V at $V_{CC} \geq$ 2.7 V; V_M = 0.5 × V_{CC} at V_{CC} < 2.7 V.
V_{OL} and V_{OH} are the typical output voltage drop that occur with the output load.

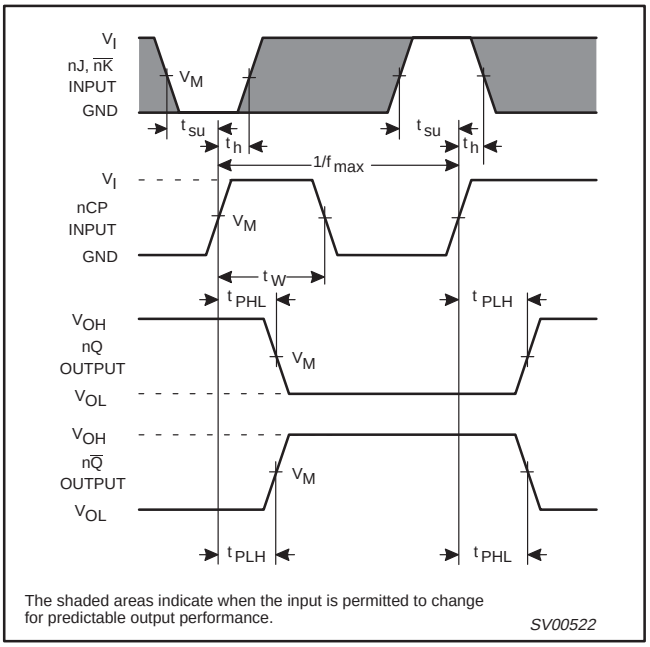

Figure 1. Clock (nCP) to output (nQ, n$\overline{Q}$) propagation delays, the clock pulse width, the nJ and n$\overline{K}$ to nCP set-up, the nCP to nJ, n$\overline{K}$ hold times and the maximum clock pulse frequency.

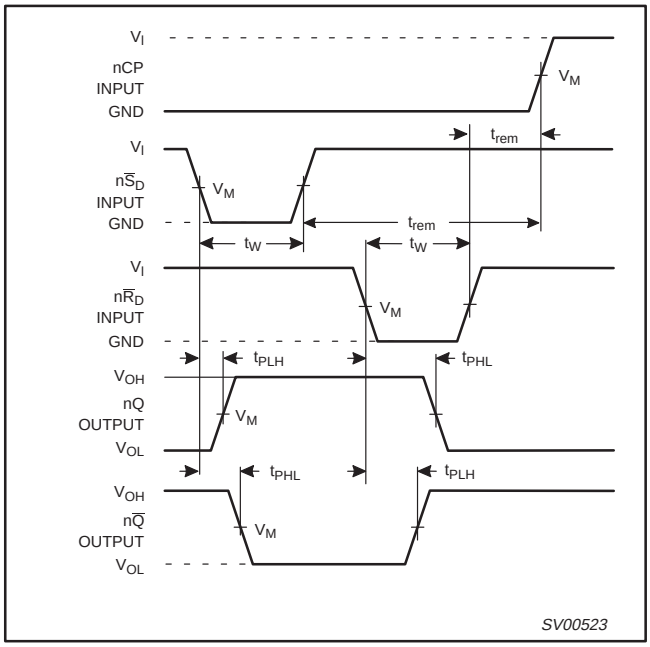

Figure 2. Set (n$\overline{S}_D$) and reset (n$\overline{R}_D$) input to output (nQ, n$\overline{Q}$) propagation delays, the set and reset pulse widths and the n$\overline{R}_D$, n$\overline{S}_D$ to nCP removal time.

TEST CIRCUIT

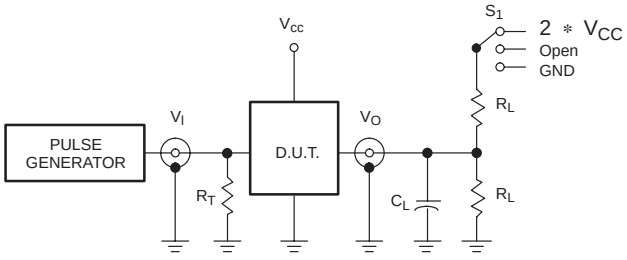

Test Circuit for Outputs

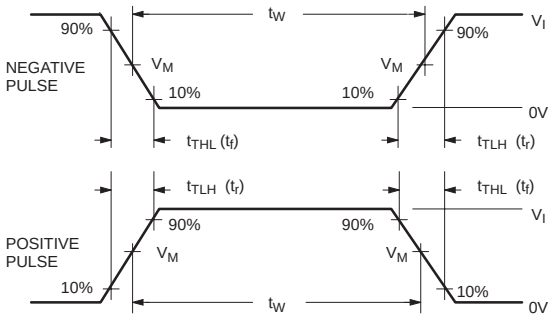

V_M = 1.5V
Input Pulse Definition

SWITCH POSITION

TEST	S_1
t_{PLH}/t_{PHL}	Open

V_{CC}	V_I
< 2.7V	V_{CC}
2.7–3.6V	2.7V
≥ 4.5 V	V_{CC}

DEFINITIONS

R_L = Load resistor; see AC CHARACTERISTICS for value.

C_L = Load capacitance includes jig and probe capacitance: See AC CHARACTERISTICS for value.

R_T = Termination resistance should be equal to Z_{OUT} of pulse generators.

SV00904

Figure 3. Load circuitry for switching times.

SO16: plastic small outline package; 16 leads; body width 3.9 mm **SOT109-1**

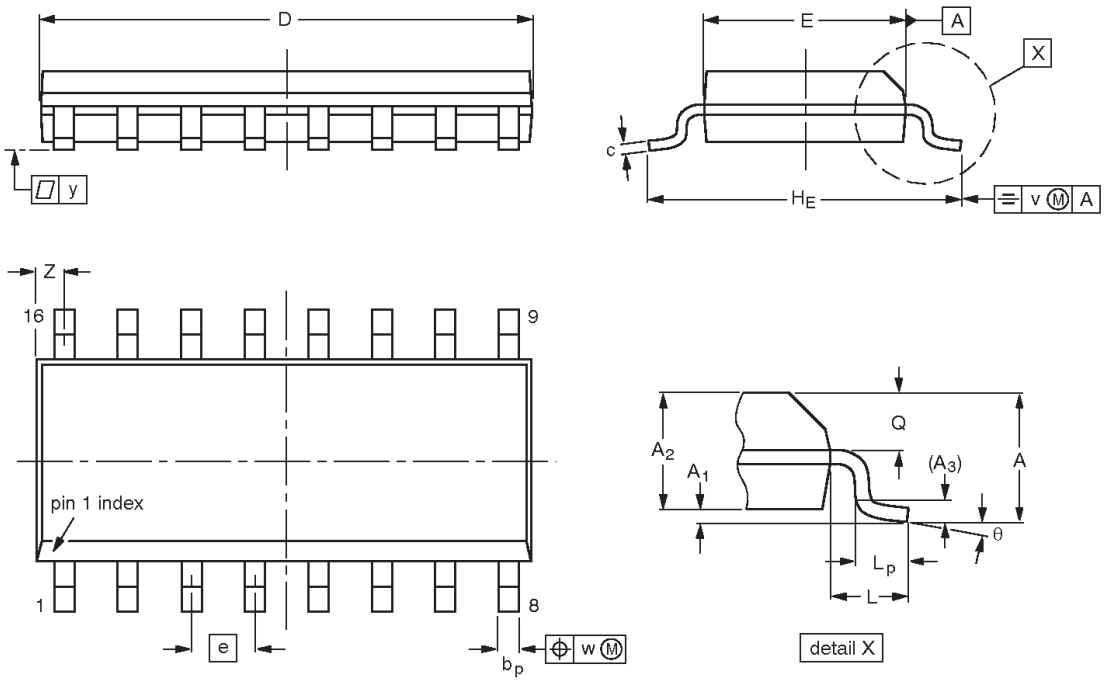

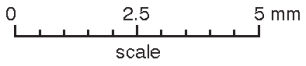

DIMENSIONS (inch dimensions are derived from the original mm dimensions)

UNIT	A max.	A_1	A_2	A_3	b_p	c	$D^{(1)}$	$E^{(1)}$	e	H_E	L	L_p	Q	v	w	y	$Z^{(1)}$	θ
mm	1.75	0.25 0.10	1.45 1.25	0.25	0.49 0.36	0.25 0.19	10.0 9.8	4.0 3.8	1.27	6.2 5.8	1.05	1.0 0.4	0.7 0.6	0.25	0.25	0.1	0.7 0.3	8° 0°
inches	0.069	0.010 0.004	0.057 0.049	0.01	0.019 0.014	0.0100 0.0075	0.39 0.38	0.16 0.15	0.050	0.244 0.228	0.041	0.039 0.016	0.028 0.020	0.01	0.01	0.004	0.028 0.012	

Note

1. Plastic or metal protrusions of 0.15 mm maximum per side are not included.

OUTLINE VERSION	REFERENCES				EUROPEAN PROJECTION	ISSUE DATE
	IEC	JEDEC	EIAJ			
SOT109-1	076E07S	MS-012AC				~~95-01-23~~ 97-05-22

SSOP16: plastic shrink small outline package; 16 leads; body width 5.3 mm **SOT338-1**

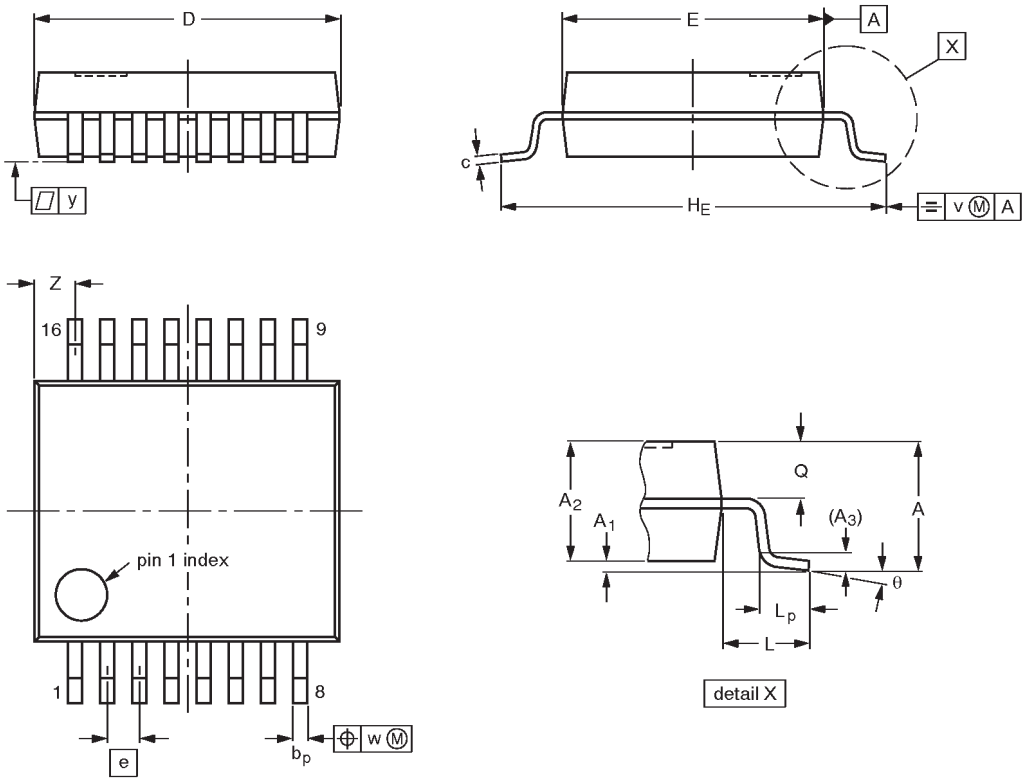

DIMENSIONS (mm are the original dimensions)

UNIT	A max.	A_1	A_2	A_3	b_p	c	D (1)	E (1)	e	H_E	L	L_p	Q	v	w	y	Z (1)	θ
mm	2.0	0.21 0.05	1.80 1.65	0.25	0.38 0.25	0.20 0.09	6.4 6.0	5.4 5.2	0.65	7.9 7.6	1.25	1.03 0.63	0.9 0.7	0.2	0.13	0.1	1.00 0.55	8° 0°

Note

1. Plastic or metal protrusions of 0.25 mm maximum per side are not included.

OUTLINE VERSION	REFERENCES				EUROPEAN PROJECTION	ISSUE DATE
	IEC	JEDEC	EIAJ			
SOT338-1		MO-150AC				~~94-01-14~~ 95-02-04

TSSOP16: plastic thin shrink small outline package; 16 leads; body width 4.4 mm **SOT403-1**

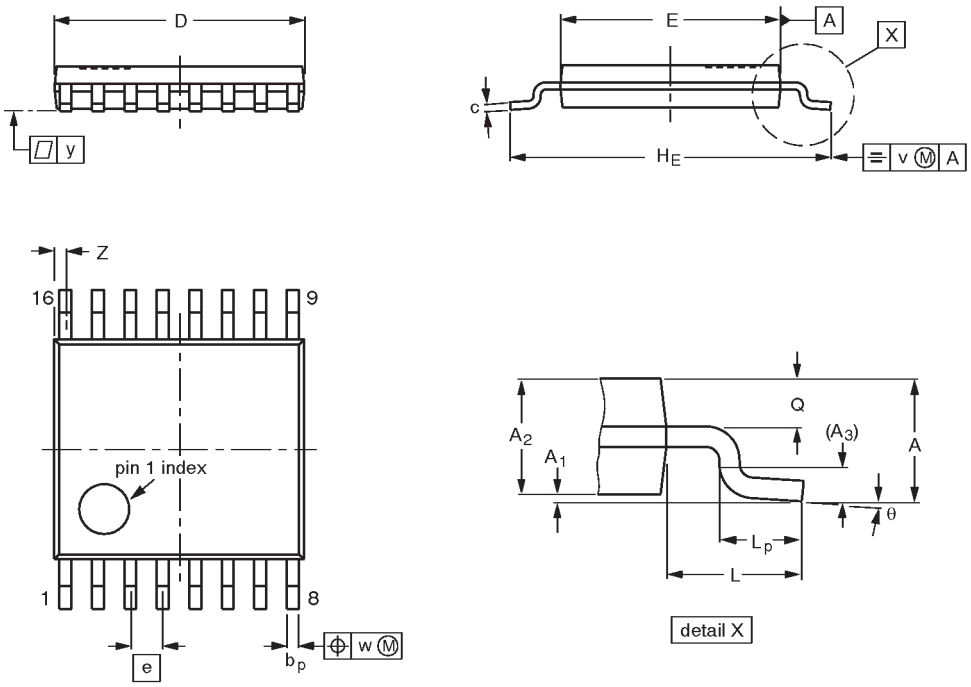

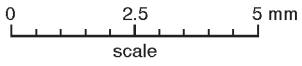

DIMENSIONS (mm are the original dimensions)

UNIT	A max.	A_1	A_2	A_3	b_p	c	D (1)	E (2)	e	H_E	L	L_p	Q	v	w	y	Z (1)	θ
mm	1.10	0.15 0.05	0.95 0.80	0.25	0.30 0.19	0.2 0.1	5.1 4.9	4.5 4.3	0.65	6.6 6.2	1.0	0.75 0.50	0.4 0.3	0.2	0.13	0.1	0.40 0.06	8° 0°

Notes

1. Plastic or metal protrusions of 0.15 mm maximum per side are not included.
2. Plastic interlead protrusions of 0.25 mm maximum per side are not included.

OUTLINE VERSION	REFERENCES				EUROPEAN PROJECTION	ISSUE DATE
	IEC	JEDEC	EIAJ			
SOT403-1		MO-153				~~94-07-12~~ 95-04-04

DEFINITIONS

Data Sheet Identification	Product Status	Definition
Objective Specification	Formative or in Design	This data sheet contains the design target or goal specifications for product development. Specifications may change in any manner without notice.
Preliminary Specification	Preproduction Product	This data sheet contains preliminary data, and supplementary data will be published at a later date. Philips Semiconductors reserves the right to make changes at any time without notice in order to improve design and supply the best possible product.
Product Specification	Full Production	This data sheet contains Final Specifications. Philips Semiconductors reserves the right to make changes at any time without notice, in order to improve design and supply the best possible product.

Philips Semiconductors and Philips Electronics North America Corporation reserve the right to make changes, without notice, in the products, including circuits, standard cells, and/or software, described or contained herein in order to improve design and/or performance. Philips Semiconductors assumes no responsibility or liability for the use of any of these products, conveys no license or title under any patent, copyright, or mask work right to these products, and makes no representations or warranties that these products are free from patent, copyright, or mask work right infringement, unless otherwise specified. Applications that are described herein for any of these products are for illustrative purposes only. Philips Semiconductors makes no representation or warranty that such applications will be suitable for the specified use without further testing or modification.

LIFE SUPPORT APPLICATIONS

Philips Semiconductors and Philips Electronics North America Corporation Products are not designed for use in life support appliances, devices, or systems where malfunction of a Philips Semiconductors and Philips Electronics North America Corporation Product can reasonably be expected to result in a personal injury. Philips Semiconductors and Philips Electronics North America Corporation customers using or selling Philips Semiconductors and Philips Electronics North America Corporation Products for use in such applications do so at their own risk and agree to fully indemnify Philips Semiconductors and Philips Electronics North America Corporation for any damages resulting from such improper use or sale.

Philips Semiconductors
811 East Arques Avenue
P.O. Box 3409
Sunnyvale, California 94088–3409
Telephone 800-234-7381

© Copyright Philips Electronics North America Corporation 1998
All rights reserved. Printed in U.S.A.

print code Date of release: 05-96

Document order number: 9397-750-04489

Let's make things better.

Philips Semiconductors

PHILIPS