74HC20-Q100; 74HCT20-Q100

Dual 4-input NAND gate

Rev. 2 — 27 March 2019 Product data sheet

1. General description

The 74HC20-Q100; 74HCT20-Q100 is a dual 4-input NAND gate. Inputs include clamp diodes. This enables the use of current limiting resistors to interface inputs to voltages in excess of V_{CC}.

This product has been qualified to the Automotive Electronics Council (AEC) standard Q100 (Grade 1) and is suitable for use in automotive applications.

2. Features and benefits

- Automotive product qualification in accordance with AEC-Q100 (Grade 1)
  - Specified from -40 °C to +85 °C and from -40 °C to +125 °C
- Complies with JEDEC standard JESD7A
- Low-power dissipation
- Input levels:
  - For 74HC20-Q100: CMOS level
  - For 74HCT20-Q100: TTL level
- ESD protection:
  - MIL-STD-883, method 3015 exceeds 2000 V
  - HBM JESD22-A114F exceeds 2000 V
  - MM JESD22-A115-A exceeds 200 V (C = 200 pF; R = 0 Ω)
- Specified from -40 °C to +80 °C and from -40 °C to +125 °C.

3. Ordering information

Table 1. Ordering information

Type number	Package			
	Temperature range	Name	Description	Version
74HC20D-Q100	-40 °C to +125 °C	SO14	plastic small outline package; 14 leads; body width 3.9 mm	SOT108-1
74HCT20D-Q100				
74HC20PW-Q100	-40 °C to +125 °C	TSSOP14	plastic thin shrink small outline package; 14 leads; body width 4.4 mm	SOT402-1

4. Functional diagram

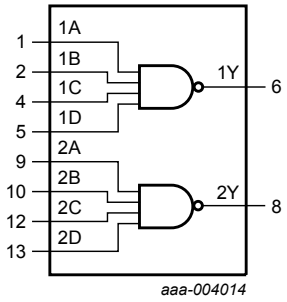

Fig. 1. Functional diagram

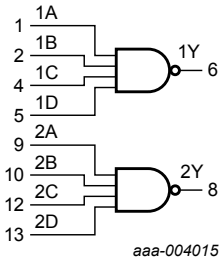

Fig. 2. Logic symbol

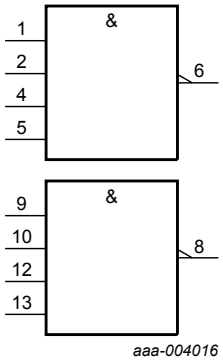

Fig. 3. IEC Logic symbol

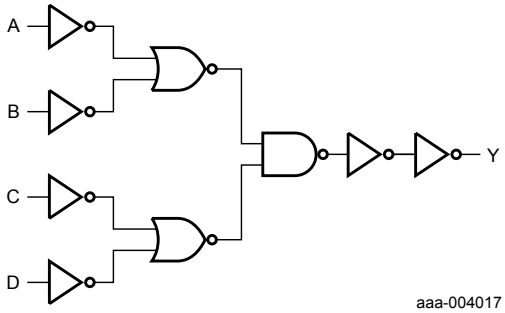

Fig. 4. Logic diagram

5. Pinning information

5.1. Pinning

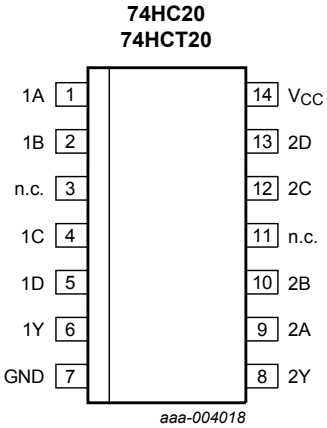

Fig. 5. Pin configuration SOT108-1

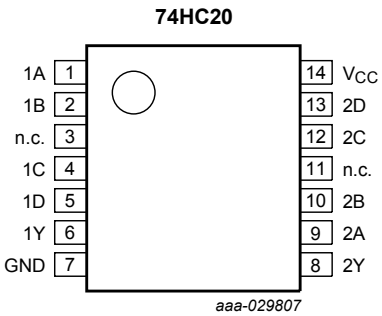

Fig. 6. Pin configuration SOT402-1

All information provided in this document is subject to legal disclaimers.

© Nexperia B.V. 2019. All rights reserved

5.2. Pin description

Table 2. Pin description

Symbol	Pin	Description
1A, 1B, 1C, 1D	1, 2, 4, 5	data input
n.c.	3, 11	not connected
1Y	6	data output
GND	7	ground (0 V)
2Y	8	data output
2A, 2B, 2C, 2D	9, 10, 12, 13	data input
V_{CC}	14	supply voltage

6. Functional description

Table 3. Function table

H = HIGH voltage level; L = LOW voltage level; X = don't care.

Input				Output
nA	**nB**	**nC**	**nD**	**nY**
L	X	X	X	H
X	L	X	X	H
X	X	L	X	H
X	X	X	L	H
H	H	H	H	L

7. Limiting values

Table 4. Limiting values

In accordance with the Absolute Maximum Rating System (IEC 60134). Voltages are referenced to GND (ground = 0 V).

Symbol	Parameter	Conditions		Min	Max	Unit
V_{CC}	supply voltage			-0.5	+7	V
I_{IK}	input clamping current	$V_I < -0.5$ V or $V_I > V_{CC} + 0.5$ V	[1]	-	±20	mA
I_{OK}	output clamping current	$V_O < -0.5$ V or $V_O > V_{CC} + 0.5$ V	[1]	-	±20	mA
I_O	output current	-0.5 V $< V_O < V_{CC} + 0.5$ V		-	±25	mA
I_{CC}	supply current			-	50	mA
I_{GND}	ground current			-50	-	mA
T_{stg}	storage temperature			-65	+150	°C
P_{tot}	total power dissipation	SO14, and TSSOP14 packages	[2]	-	500	mW

[1] The input and output voltage ratings may be exceeded if the input and output current ratings are observed.
[2] For SO14 package: P_{tot} derates linearly with 8 mW/K above 70 °C.
For TSSOP14 package: P_{tot} derates linearly with 5.5 mW/K above 60 °C.

All information provided in this document is subject to legal disclaimers.

© Nexperia B.V. 2019. All rights reserved

8. Recommended operating conditions

Table 5. Recommended operating conditions

Voltages are referenced to GND (ground = 0 V)

Symbol	Parameter	Conditions	74HC20-Q100			74HCT20-Q100			Unit
			Min	Typ	Max	Min	Typ	Max	
V_{CC}	supply voltage		2.0	5.0	6.0	4.5	5.0	5.5	V
V_I	input voltage		0	-	V_{CC}	0	-	V_{CC}	V
V_O	output voltage		0	-	V_{CC}	0	-	V_{CC}	V
T_{amb}	ambient temperature		-40	+25	+125	-40	+25	+125	°C
$\Delta t/\Delta V$	input transition rise and fall rate	V_{CC} = 2.0 V	-	-	625	-	-	-	ns/V
		V_{CC} = 4.5 V	-	1.67	139	-	1.67	139	ns/V
		V_{CC} = 6.0 V	-	-	83	-	-	-	ns/V

9. Static characteristics

Table 6. Static characteristics

At recommended operating conditions; voltages are referenced to GND (ground = 0 V).

Symbol	Parameter	Conditions	25 °C			-40 °C to +85 °C		-40 °C to +125 °C		Unit
			Min	Typ	Max	Min	Max	Min	Max	
74HC20-Q100										
V_{IH}	HIGH-level input voltage	V_{CC} = 2.0 V	1.5	1.2	-	1.5	-	1.5	-	V
		V_{CC} = 4.5 V	3.15	2.4	-	3.15	-	3.15	-	V
		V_{CC} = 6.0 V	4.2	3.2	-	4.2	-	4.2	-	V
V_{IL}	LOW-level input voltage	V_{CC} = 2.0 V	-	0.8	0.5	-	0.5	-	0.5	V
		V_{CC} = 4.5 V	-	2.1	1.35	-	1.35	-	1.35	V
		V_{CC} = 6.0 V	-	2.8	1.8	-	1.8	-	1.8	V
V_{OH}	HIGH-level output voltage	V_I = V_{IH} or V_{IL}								
		I_O = -20 µA; V_{CC} = 2.0 V	1.9	2.0	-	1.9	-	1.9	-	V
		I_O = -20 µA; V_{CC} = 4.5 V	4.4	4.5	-	4.4	-	4.4	-	V
		I_O = -20 µA; V_{CC} = 6.0 V	5.9	6.0	-	5.9	-	5.9	-	V
		I_O = -4.0 mA; V_{CC} = 4.5 V	3.98	4.32	-	3.84	-	3.7	-	V
		I_O = -5.2 mA; V_{CC} = 6.0 V	5.48	5.81	-	5.34	-	5.2	-	V
V_{OL}	LOW-level output voltage	V_I = V_{IH} or V_{IL}								
		I_O = 20 µA; V_{CC} = 2.0 V	-	0	0.1	-	0.1	-	0.1	V
		I_O = 20 µA; V_{CC} = 4.5 V	-	0	0.1	-	0.1	-	0.1	V
		I_O = 20 µA; V_{CC} = 6.0 V	-	0	0.1	-	0.1	-	0.1	V
		I_O = 4.0 mA; V_{CC} = 4.5 V	-	0.15	0.26	-	0.33	-	0.4	V
		I_O = 5.2 mA; V_{CC} = 6.0 V	-	0.16	0.26	-	0.33	-	0.4	V
I_I	input leakage current	V_I = V_{CC} or GND; V_{CC} = 6.0 V	-	-	±0.1	-	±1	-	±1	µA
I_{CC}	supply current	V_I = V_{CC} or GND; I_O = 0 A; V_{CC} = 6.0 V	-	-	2	-	20	-	40	µA
C_I	input capacitance		-	3.5	-	-	-	-	-	pF

All information provided in this document is subject to legal disclaimers.

© Nexperia B.V. 2019. All rights reserved

Symbol	Parameter	Conditions	25 °C			-40 °C to +85 °C		-40 °C to +125 °C		Unit
			Min	Typ	Max	Min	Max	Min	Max	
74HCT20-Q100										
V_{IH}	HIGH-level input voltage	V_{CC} = 4.5 V to 5.5 V	2.0	1.6	-	2.0	-	2.0	-	V
V_{IL}	LOW-level input voltage	V_{CC} = 4.5 V to 5.5 V	-	1.2	0.8	-	0.8	-	0.8	V
V_{OH}	HIGH-level output voltage	V_I = V_{IH} or V_{IL}; V_{CC} = 4.5 V								
		I_O = -20 µA	4.4	4.5	-	4.4	-	4.4	-	V
		I_O = -4.0 mA	3.98	4.32	-	3.84	-	3.7	-	V
V_{OL}	LOW-level output voltage	V_I = V_{IH} or V_{IL}; V_{CC} = 4.5 V								
		I_O = 20 µA	-	0	0.1	-	0.1	-	0.1	V
		I_O = 5.2 mA	-	0.15	0.26	-	0.33	-	0.4	V
I_I	input leakage current	V_I = V_{CC} or GND; V_{CC} = 5.5 V	-	-	±0.1	-	±1	-	±1	µA
I_{CC}	supply current	V_I = V_{CC} or GND; I_O = 0 A; V_{CC} = 5.5 V	-	-	2	-	20	-	40	µA
ΔI_{CC}	additional supply current	per input pin; V_I = V_{CC} - 2.1 V; I_O = 0 A; other inputs at V_{CC} or GND; V_{CC} = 4.5 V to 5.5 V	-	30	108	-	135	-	147	µA
C_I	input capacitance		-	3.5	-	-	-	-	-	pF

10. Dynamic characteristics

Table 7. Dynamic characteristics

GND = 0 V; C_L = 50 pF; for test circuit see Fig. 8.

Symbol	Parameter	Conditions	25 °C			-40 °C to +125 °C		Unit
			Min	Typ	Max	Max (85 °C)	Max (125 °C)	
74HC20-Q100								
t_{pd}	propagation delay	nA, nB, nC or nD to nY; see Fig. 7 [1]						
		V_{CC} = 2.0 V	-	28	90	115	135	ns
		V_{CC} = 4.5 V	-	10	18	23	27	ns
		V_{CC} = 6.0 V	-	8	15	20	23	ns
		V_{CC} = 5.0 V; C_L = 15 pF	-	8	-	-	-	ns
t_t	transition time	nY; see Fig. 7 [2]						
		V_{CC} = 2.0 V	-	19	75	95	110	ns
		V_{CC} = 4.5 V	-	7	15	19	22	ns
		V_{CC} = 6.0 V	-	6	13	16	19	ns
C_{PD}	power dissipation capacitance	per package; V_I = GND to V_{CC} [3]	-	22	-	-	-	pF

All information provided in this document is subject to legal disclaimers.

© Nexperia B.V. 2019. All rights reserved

Symbol	Parameter	Conditions	25 °C			-40 °C to +125 °C		Unit
			Min	Typ	Max	Max (85 °C)	Max (125 °C)	
74HCT20-Q100								
t_{pd}	propagation delay	nA, nB, nC or nD to nY; see Fig. 7 [1]						
		V_{CC} = 4.5 V	-	16	28	35	42	ns
		V_{CC} = 5.0 V; C_L = 15 pF	-	13	-	-	-	ns
t_t	transition time	nY; V_{CC} = 4.5 V; see Fig. 7 [2]	-	7	15	19	22	ns
C_{PD}	power dissipation capacitance	per package; V_I = GND to V_{CC} - 1.5 V [3]	-	17	-	-	-	pF

[1] t_{pd} is the same as t_{PHL} and t_{PLH}.
[2] t_t is the same as t_{THL} and t_{TLH}.
[3] C_{PD} is used to determine the dynamic power dissipation (P_D in µW):
$P_D = C_{PD} \times V_{CC}^2 \times f_i \times N + \sum(C_L \times V_{CC}^2 \times f_o)$ where:
f_i = input frequency in MHz;
f_o = output frequency in MHz;
C_L = output load capacitance in pF;
V_{CC} = supply voltage in V;
N = number of inputs switching;
$\sum(C_L \times V_{CC}^2 \times f_o)$ = sum of outputs.

10.1. Waveform and test circuit

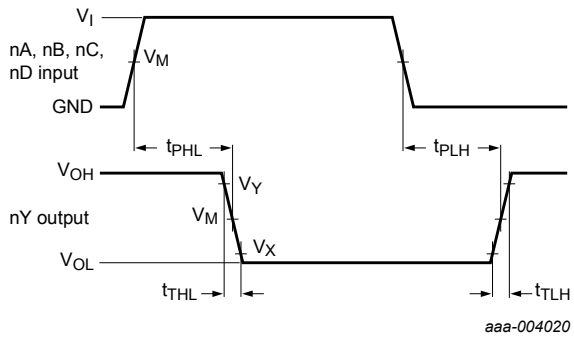

Measurement points are given in Table 8.
V_{OL} and V_{OH} are typical voltage output levels that occur with the output load.

Fig. 7. Waveforms showing the input (nA, nB, nC, nD) to output (nY) propagation delays and the output transition times

Table 8. Measurement points

Type	Input	Output		
	V_M	V_M	V_X	V_Y
74HC20-Q100	$0.5V_{CC}$	$0.5V_{CC}$	$0.1V_{CC}$	$0.9V_{CC}$
74HCT20-Q100	1.3 V	1.3 V	$0.1V_{CC}$	$0.9V_{CC}$

All information provided in this document is subject to legal disclaimers.

© Nexperia B.V. 2019. All rights reserved

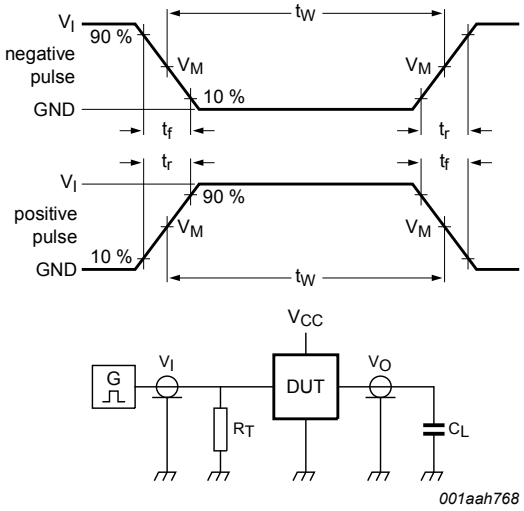

Test data is given in Table 9.

Definitions test circuit:

R_T = termination resistance should be equal to output impedance Z_o of the pulse generator.

C_L = load capacitance including jig and probe capacitance.

Fig. 8. Test circuit for measuring switching times

Table 9. Test data

Type	Input		Load	Test
	V_I	t_r, t_f	C_L	
74HC20-Q100	V_{CC}	6.0 ns	15 pF, 50 pF	t_{PLH}, t_{PHL}
74HCT20-Q100	3.0 V	6.0 ns	15 pF, 50 pF	t_{PLH}, t_{PHL}

All information provided in this document is subject to legal disclaimers.

© Nexperia B.V. 2019. All rights reserved

11. Package outline

SO14: plastic small outline package; 14 leads; body width 3.9 mm **SOT108-1**

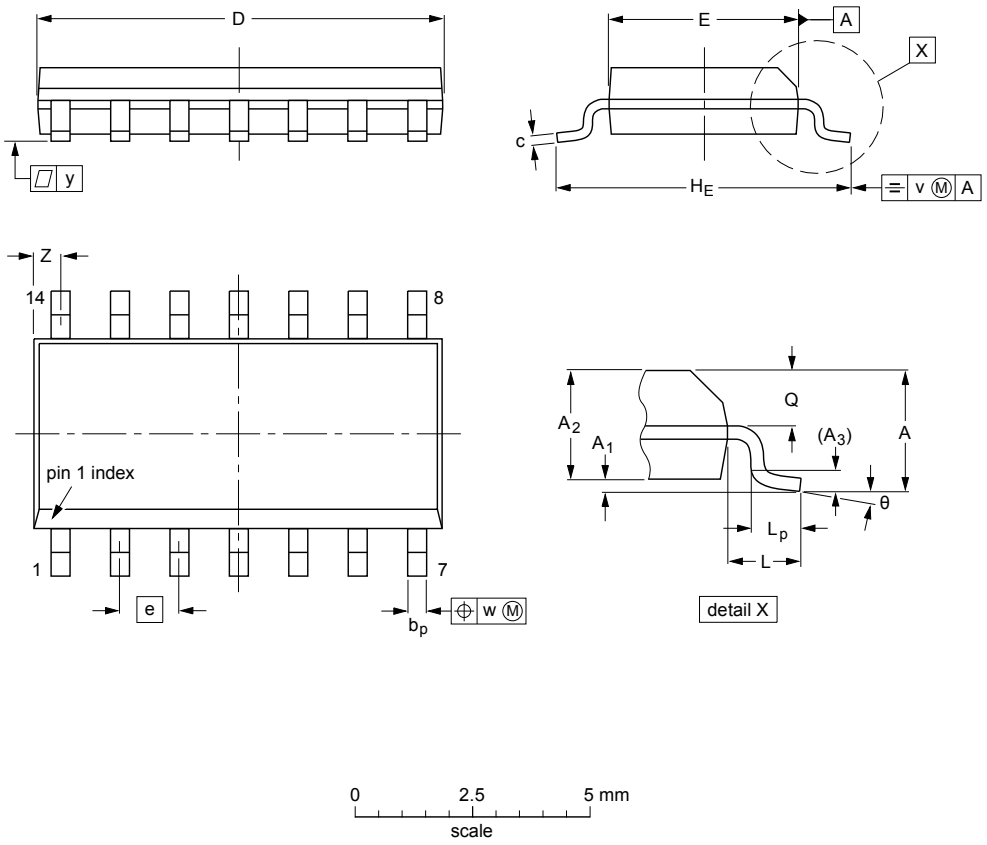

DIMENSIONS (inch dimensions are derived from the original mm dimensions)

UNIT	A max.	A_1	A_2	A_3	b_p	c	$D^{(1)}$	$E^{(1)}$	e	H_E	L	L_p	Q	v	w	y	$Z^{(1)}$	θ
mm	1.75	0.25 0.10	1.45 1.25	0.25	0.49 0.36	0.25 0.19	8.75 8.55	4.0 3.8	1.27	6.2 5.8	1.05	1.0 0.4	0.7 0.6	0.25	0.25	0.1	0.7 0.3	8° 0°
inches	0.069	0.010 0.004	0.057 0.049	0.01	0.019 0.014	0.0100 0.0075	0.35 0.34	0.16 0.15	0.05	0.244 0.228	0.041	0.039 0.016	0.028 0.024	0.01	0.01	0.004	0.028 0.012	

Note

1. Plastic or metal protrusions of 0.15 mm (0.006 inch) maximum per side are not included.

OUTLINE VERSION	REFERENCES				EUROPEAN PROJECTION	ISSUE DATE
	IEC	JEDEC	JEITA			
SOT108-1	076E06	MS-012				~~99-12-27~~ 03-02-19

Fig. 9. Package outline SOT108-1 (SO14)

All information provided in this document is subject to legal disclaimers.

© Nexperia B.V. 2019. All rights reserved

TSSOP14: plastic thin shrink small outline package; 14 leads; body width 4.4 mm **SOT402-1**

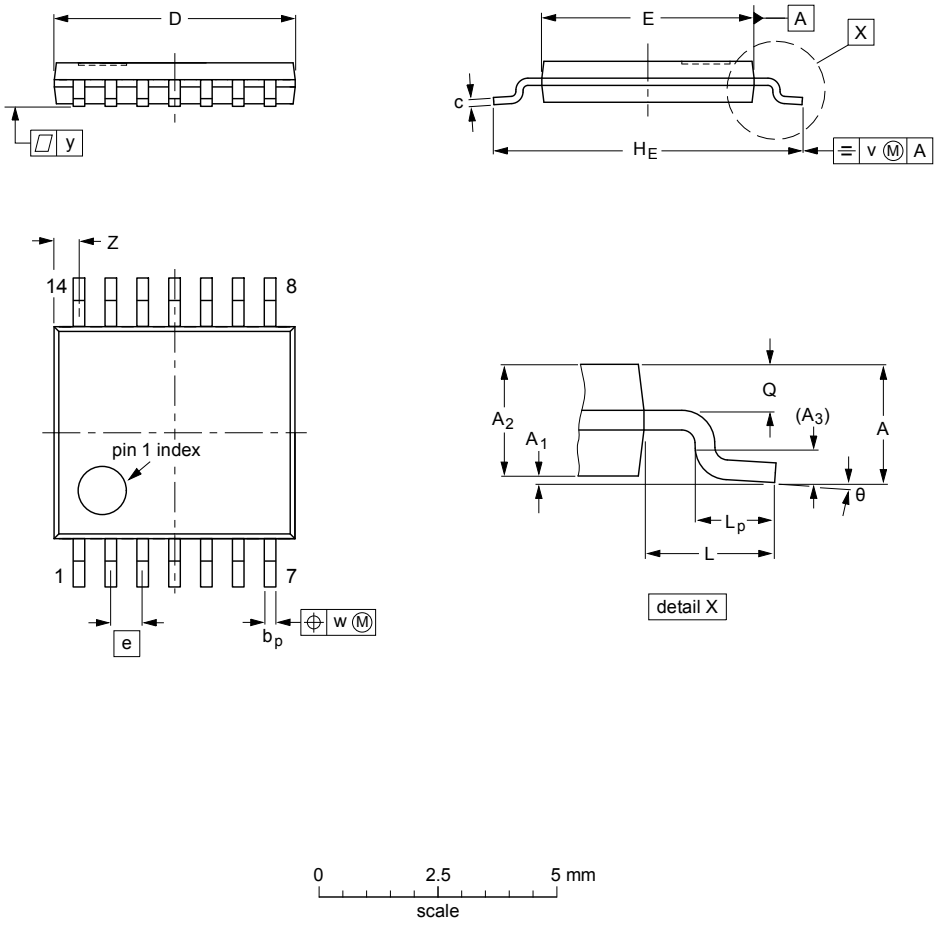

DIMENSIONS (mm are the original dimensions)

UNIT	A max.	A_1	A_2	A_3	b_p	c	D (1)	E (2)	e	H_E	L	L_p	Q	v	w	y	Z (1)	θ
mm	1.1	0.15 0.05	0.95 0.80	0.25	0.30 0.19	0.2 0.1	5.1 4.9	4.5 4.3	0.65	6.6 6.2	1	0.75 0.50	0.4 0.3	0.2	0.13	0.1	0.72 0.38	8° 0°

Notes

1. Plastic or metal protrusions of 0.15 mm maximum per side are not included.
2. Plastic interlead protrusions of 0.25 mm maximum per side are not included.

OUTLINE VERSION	REFERENCES				EUROPEAN PROJECTION	ISSUE DATE
	IEC	JEDEC	JEITA			
SOT402-1		MO-153				~~99-12-27~~ 03-02-18

Fig. 10. Package outline SOT402-1 (TSSOP14)

All information provided in this document is subject to legal disclaimers.

© Nexperia B.V. 2019. All rights reserved

12. Abbreviations

Table 10. Abbreviations

Acronym	Description
CMOS	Complementary Metal Oxide Semiconductor
DUT	Device Under Test
ESD	ElectroStatic Discharge
HBM	Human Body Model
MIL	Military
MM	Machine Model
TTL	Transistor-Transistor Logic

13. Revision history

Table 11. Revision history

Document ID	Release date	Data sheet status	Change notice	Supersedes
74HC_HCT20_Q100 v.2	20190327	Product data sheet	-	74HC_HCT20_Q100 v.1
Modifications:	• The format of this data sheet has been redesigned to comply with the identity guidelines of Nexperia. • Legal texts have been adapted to the new company name where appropriate.			
74HC_HCT20_Q100 v.1	20120717	Product data sheet	-	-

All information provided in this document is subject to legal disclaimers.

© Nexperia B.V. 2019. All rights reserved

14. Legal information

Data sheet status

Document status [1][2]	Product status [3]	Definition
Objective [short] data sheet	Development	This document contains data from the objective specification for product development.
Preliminary [short] data sheet	Qualification	This document contains data from the preliminary specification.
Product [short] data sheet	Production	This document contains the product specification.

[1] Please consult the most recently issued document before initiating or completing a design.
[2] The term 'short data sheet' is explained in section "Definitions".
[3] The product status of device(s) described in this document may have changed since this document was published and may differ in case of multiple devices. The latest product status information is available on the internet at https://www.nexperia.com.

Definitions

Draft — The document is a draft version only. The content is still under internal review and subject to formal approval, which may result in modifications or additions. Nexperia does not give any representations or warranties as to the accuracy or completeness of information included herein and shall have no liability for the consequences of use of such information.

Short data sheet — A short data sheet is an extract from a full data sheet with the same product type number(s) and title. A short data sheet is intended for quick reference only and should not be relied upon to contain detailed and full information. For detailed and full information see the relevant full data sheet, which is available on request via the local Nexperia sales office. In case of any inconsistency or conflict with the short data sheet, the full data sheet shall prevail.

Product specification — The information and data provided in a Product data sheet shall define the specification of the product as agreed between Nexperia and its customer, unless Nexperia and customer have explicitly agreed otherwise in writing. In no event however, shall an agreement be valid in which the Nexperia product is deemed to offer functions and qualities beyond those described in the Product data sheet.

Disclaimers

Limited warranty and liability — Information in this document is believed to be accurate and reliable. However, Nexperia does not give any representations or warranties, expressed or implied, as to the accuracy or completeness of such information and shall have no liability for the consequences of use of such information. Nexperia takes no responsibility for the content in this document if provided by an information source outside of Nexperia.

In no event shall Nexperia be liable for any indirect, incidental, punitive, special or consequential damages (including - without limitation - lost profits, lost savings, business interruption, costs related to the removal or replacement of any products or rework charges) whether or not such damages are based on tort (including negligence), warranty, breach of contract or any other legal theory.

Notwithstanding any damages that customer might incur for any reason whatsoever, Nexperia's aggregate and cumulative liability towards customer for the products described herein shall be limited in accordance with the Terms and conditions of commercial sale of Nexperia.

Right to make changes — Nexperia reserves the right to make changes to information published in this document, including without limitation specifications and product descriptions, at any time and without notice. This document supersedes and replaces all information supplied prior to the publication hereof.

Suitability for use in automotive applications — This Nexperia product has been qualified for use in automotive applications. Unless otherwise agreed in writing, the product is not designed, authorized or warranted to be suitable for use in life support, life-critical or safety-critical systems or equipment, nor in applications where failure or malfunction of an Nexperia product can reasonably be expected to result in personal injury, death or severe property or environmental damage. Nexperia and its suppliers accept no liability for inclusion and/or use of Nexperia products in such equipment or applications and therefore such inclusion and/or use is at the customer's own risk.

Quick reference data — The Quick reference data is an extract of the product data given in the Limiting values and Characteristics sections of this document, and as such is not complete, exhaustive or legally binding.

Applications — Applications that are described herein for any of these products are for illustrative purposes only. Nexperia makes no representation or warranty that such applications will be suitable for the specified use without further testing or modification.

Customers are responsible for the design and operation of their applications and products using Nexperia products, and Nexperia accepts no liability for any assistance with applications or customer product design. It is customer's sole responsibility to determine whether the Nexperia product is suitable and fit for the customer's applications and products planned, as well as for the planned application and use of customer's third party customer(s). Customers should provide appropriate design and operating safeguards to minimize the risks associated with their applications and products.

Nexperia does not accept any liability related to any default, damage, costs or problem which is based on any weakness or default in the customer's applications or products, or the application or use by customer's third party customer(s). Customer is responsible for doing all necessary testing for the customer's applications and products using Nexperia products in order to avoid a default of the applications and the products or of the application or use by customer's third party customer(s). Nexperia does not accept any liability in this respect.

Limiting values — Stress above one or more limiting values (as defined in the Absolute Maximum Ratings System of IEC 60134) will cause permanent damage to the device. Limiting values are stress ratings only and (proper) operation of the device at these or any other conditions above those given in the Recommended operating conditions section (if present) or the Characteristics sections of this document is not warranted. Constant or repeated exposure to limiting values will permanently and irreversibly affect the quality and reliability of the device.

Terms and conditions of commercial sale — Nexperia products are sold subject to the general terms and conditions of commercial sale, as published at http://www.nexperia.com/profile/terms, unless otherwise agreed in a valid written individual agreement. In case an individual agreement is concluded only the terms and conditions of the respective agreement shall apply. Nexperia hereby expressly objects to applying the customer's general terms and conditions with regard to the purchase of Nexperia products by customer.

No offer to sell or license — Nothing in this document may be interpreted or construed as an offer to sell products that is open for acceptance or the grant, conveyance or implication of any license under any copyrights, patents or other industrial or intellectual property rights.

Export control — This document as well as the item(s) described herein may be subject to export control regulations. Export might require a prior authorization from competent authorities.

Translations — A non-English (translated) version of a document is for reference only. The English version shall prevail in case of any discrepancy between the translated and English versions.

Trademarks

Notice: All referenced brands, product names, service names and trademarks are the property of their respective owners.

All information provided in this document is subject to legal disclaimers.

© Nexperia B.V. 2019. All rights reserved

Contents

1. General description....1
2. Features and benefits....1
3. Ordering information....1
4. Functional diagram....2
5. Pinning information....2
5.1. Pinning....2
5.2. Pin description....3
6. Functional description....3
7. Limiting values....3
8. Recommended operating conditions....4
9. Static characteristics....4
10. Dynamic characteristics....5
10.1. Waveform and test circuit....6
11. Package outline....8
12. Abbreviations....10
13. Revision history....10
14. Legal information....11

© **Nexperia B.V. 2019. All rights reserved**

For more information, please visit: http://www.nexperia.com
For sales office addresses, please send an email to: salesaddresses@nexperia.com
Date of release: 27 March 2019