National Semiconductor

May 1995

54F/74F533
Octal Transparent Latch with TRI-STATE® Outputs

General Description

The 'F533 consists of eight latches with TRI-STATE outputs for bus organized system applications. The flip-flops appear transparent to the data when Latch Enable (LE) is HIGH. When LE is LOW, the data that meets the setup times is latched. Data appears on the bus when the Output Enable ($\overline{OE}$) is LOW. When $\overline{OE}$ is HIGH the bus output is in the high impedance state. The 'F533 is the same as the 'F373, except that the outputs are inverted.

Features

- Eight latches in a single package
- TRI-STATE outputs for bus interfacing
- Inverted version of the 'F373
- Guaranteed 4000V minimum ESD protection

Commercial	Military	Package Number	Package Description
74F533PC		N20A	20-Lead (0.300″ Wide) Molded Dual-In-Line
	54F533DM (Note 2)	J20A	20-Lead Ceramic Dual-In-Line
74F533SC (Note 1)		M20B	20-Lead (0.300″ Wide) Molded Small Outline, JEDEC
74F533SJ (Note 1)		M20D	20-Lead (0.300″ Wide) Molded Small Outline, EIAJ
	54F533FM (Note 2)	W20A	20-Lead Cerpack
	54F533LM (Note 2)	E20A	20-Lead Ceramic Leadless Chip Carrier, Type C

Note 1: Devices also available in 13″ reel. Use suffix = SCX and SJX.

Note 2: Military grade device with environmental and burn-in processing. Use suffix = DMQB, FMQB and LMQB.

Logic Symbols

IEEE/IEC

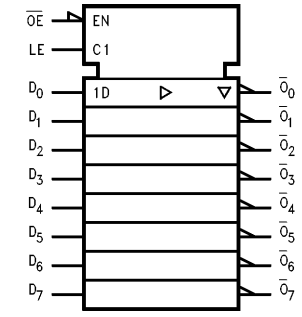

TL/F/9548–4

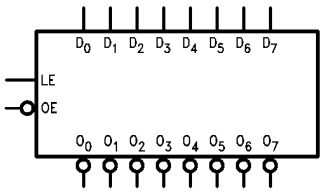

TL/F/9548–1

Connection Diagrams

Pin Assignment for DIP, SOIC and Flatpak

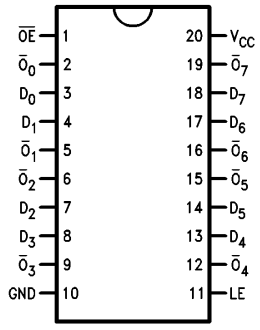

TL/F/9548–2

Pin Assignment for LCC

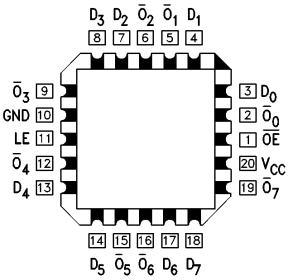

TL/F/9548–3

TRI-STATE® is a registered trademark of National Semiconductor Corporation.

©1995 National Semiconductor Corporation

RRD-B30M75/Printed in U. S. A.

Unit Loading/Fan Out

Pin Names	Description	54F/74F	
		U.L. HIGH/LOW	Input I_{IH}/I_{IL} Output I_{OH}/I_{OL}
D_0–D_7	Data Inputs	1.0/1.0	20 μA/−0.6 mA
LE	Latch Enable Input (Active HIGH)	1.0/1.0	20 μA/−0.6 mA
$\overline{OE}$	Output Enable Input (Active LOW)	1.0/1.0	20 μA/−0.6 mA
$\overline{O}_0$–$\overline{O}_7$	Complementary TRI-STATE Outputs	150/40 (33.3)	−3 mA/24 mA (20 mA)

Function Table

Inputs			Output
LE	$\overline{OE}$	D	$\overline{O}$
H	L	H	L
H	L	L	H
L	L	X	$\overline{O}_0$
X	H	X	Z

H = HIGH Voltage Level
L = LOW Voltage Level
X = Immaterial

Functional Description

The ’F533 contains eight D-type latches with TRI-STATE output buffers. When the Latch Enable (LE) input is HIGH, data on the D_n inputs enters the latches. In this condition the latches are transparent, i.e., a latch output will change state each time its D input changes. When LE is LOW, the latches store the information that was present on the D inputs a setup time preceding the HIGH-to-LOW transition of LE. The TRI-STATE buffers are controlled by the Output Enable ($\overline{OE}$) input. When $\overline{OE}$ is LOW, the buffers are in the bi-state mode. When $\overline{OE}$ is HIGH the buffers are in the high impedance mode but this does not interfere with entering new data into the latches.

Logic Diagram

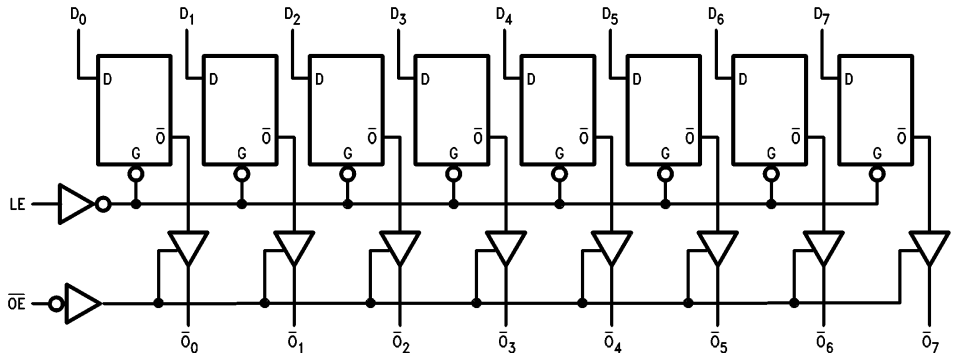

TL/F/9548–5

Please note that this diagram is provided only for the understanding of logic operations and should not be used to estimate propagation delays.

Absolute Maximum Ratings (Note 1)

If Military/Aerospace specified devices are required, please contact the National Semiconductor Sales Office/Distributors for availability and specifications.

Storage Temperature	−65°C to +150°C
Ambient Temperature under Bias	−55°C to +125°C
Junction Temperature under Bias	−55°C to +175°C
Plastic	−55°C to +150°C
V_{CC} Pin Potential to Ground Pin	−0.5V to +7.0V
Input Voltage (Note 2)	−0.5V to +7.0V
Input Current (Note 2)	−30 mA to +5.0 mA
Voltage Applied to Output in HIGH State (with V_{CC} = 0V)	
Standard Output	−0.5V to V_{CC}
TRI-STATE Output	−0.5V to +5.5V
Current Applied to Output in LOW State (Max)	twice the rated I_{OL} (mA)
ESD Last Passing Voltage (Min)	4000V

Note 1: Absolute maximum ratings are values beyond which the device may be damaged or have its useful life impaired. Functional operation under these conditions is not implied.

Note 2: Either voltage limit or current limit is sufficient to protect inputs.

Recommended Operating Conditions

Free Air Ambient Temperature	
Military	−55°C to +125°C
Commercial	0°C to +70°C
Supply Voltage	
Military	+4.5V to +5.5V
Commercial	+4.5V to +5.5V

DC Electrical Characteristics

Symbol	Parameter		54F/74F			Units	V_{CC}	Conditions
			Min	Typ	Max			
V_{IH}	Input HIGH Voltage		2.0			V		Recognized as a HIGH Signal
V_{IL}	Input LOW Voltage				0.8	V		Recognized as a LOW Signal
V_{CD}	Input Clamp Diode Voltage				−1.2	V	Min	I_{IN} = −18 mA
V_{OH}	Output HIGH Voltage	54F 10% V_{CC}	2.5			V	Min	I_{OH} = −1 mA
		54F 10% V_{CC}	2.4					I_{OH} = −3 mA
		74F 10% V_{CC}	2.5					I_{OH} = −1 mA
		74F 10% V_{CC}	2.4					I_{OH} = −3 mA
		74F 5% V_{CC}	2.7					I_{OH} = −1 mA
		74F 5% V_{CC}	2.7					I_{OH} = −3 mA
V_{OL}	Output LOW Voltage	54F 10% V_{CC}			0.5	V	Min	I_{OL} = 20 mA
		74F 10% V_{CC}			0.5			I_{OL} = 24 mA
I_{IH}	Input HIGH Current	54F			20.0	μA	Max	V_{IN} = 2.7V
		74F			5.0			
I_{BVI}	Input HIGH Current Breakdown Test	54F			100	μA	Max	V_{IN} = 7.0V
		74F			7.0			
I_{BVIT}	Input HIGH Current Breakdown (I/O)	54F			1.0	mA	Max	V_{IN} = 5.5V
		74F			0.5			
I_{CEX}	Output HIGH Leakage Current	54F			250	μA	Max	V_{OUT} = V_{CC}
		74F			50			
V_{ID}	Input Leakage Test	74F	4.75			V	0.0	I_{ID} = 1.9 μA All Other Pins Grounded
I_{OD}	Output Leakage Circuit Current	74F			3.75	μA	0.0	V_{IOD} = 150 mV All Other Pins Grounded
I_{IL}	Input LOW Current				−0.6	mA	Max	V_{IN} = 0.5V
I_{OZH}	Output Leakage Current				50	μA	Max	V_{OUT} = 2.7V
I_{OZL}	Output Leakage Current				−50	μA	Max	V_{OUT} = 0.5V
I_{OS}	Output Short-Circuit Current		−60		−150	mA	Max	V_{OUT} = 0V
I_{ZZ}	Bus Drainage Test				500	μA	0.0V	V_{OUT} = 5.25V
I_{CCZ}	Power Supply Current			41	61	mA	Max	V_O = HIGH Z

AC Electrical Characteristics

Symbol	Parameter	74F $T_A = +25°C$ $V_{CC} = +5.0V$ $C_L = 50$ pF			54F T_A, V_{CC} = Mil $C_L = 50$ pF		74F T_A, V_{CC} = Com $C_L = 50$ pF		Units
		Min	Typ	Max	Min	Max	Min	Max	
t_{PLH}	Propagation Delay	4.0	6.7	9.0	4.0	12.0	4.0	10.0	ns
t_{PHL}	D_n to $\overline{O}_n$	2.5	4.4	7.0	2.5	9.0	2.5	8.0	
t_{PLH}	Propagation Delay	5.0	7.1	11.0	5.0	14.0	5.0	13.0	ns
t_{PHL}	LE to $\overline{O}_n$	3.0	4.7	7.0	3.0	9.0	3.0	8.0	
t_{PZH}	Output Enable Time	2.0	5.9	10.0	2.0	12.5	2.0	11.0	ns
t_{PZL}		2.0	5.6	7.5	2.0	10.5	2.0	8.5	
t_{PHZ}	Output Disable Time	1.5	3.4	6.5	1.5	8.5	1.5	7.0	ns
t_{PLZ}		1.5	2.7	5.5	1.5	7.5	1.5	6.5	

AC Operating Requirements

Symbol	Parameter	74F $T_A = +25°C$ $V_{CC} = +5.0V$		54F T_A, V_{CC} = Mil		74F T_A, V_{CC} = Com		Units
		Min	Max	Min	Max	Min	Max	
$t_s(H)$	Setup Time, HIGH or LOW	2.0		2.0		2.0		ns
$t_s(L)$	D_n to LE	2.0		2.0		2.0		
$t_h(H)$	Hold Time, HIGH or LOW	3.0		3.0		3.0		ns
$t_h(L)$	D_n to LE	3.0		3.0		3.0		
$t_w(H)$	LE Pulse Width, HIGH	6.0		6.0		6.0		ns

Ordering Information

The device number is used to form part of a simplified purchasing code where a package type and temperature range are defined as follows:

74F 533 S C X

Temperature Range Family
74F = Commercial
54F = Military

Device Type

Package Code
P = Plastic DIP
D = Ceramic DIP
F = Flatpak
L = Leadless Chip Carrier (LCC)
S = Small Outline SOIC JEDEC
SJ = Small Outline SOIC EIAJ

Temperature Range
C = Commercial (0°C to +70°C)
M = Military (−55°C to +125°C)

Special Variations
X = Devices shipped in 13″ reels
QB = Military grade device with environmental and burn-in processing shipped in tubes

Physical Dimensions inches (millimeters)

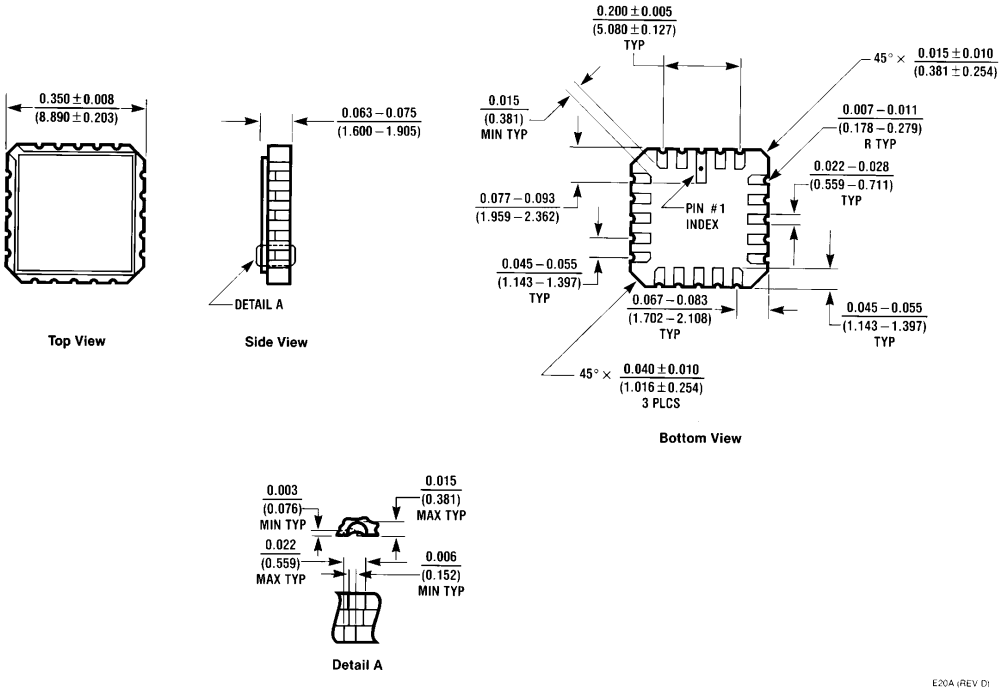

20-Lead Ceramic Leadless Chip Carrier (L)
NS Package Number E20A

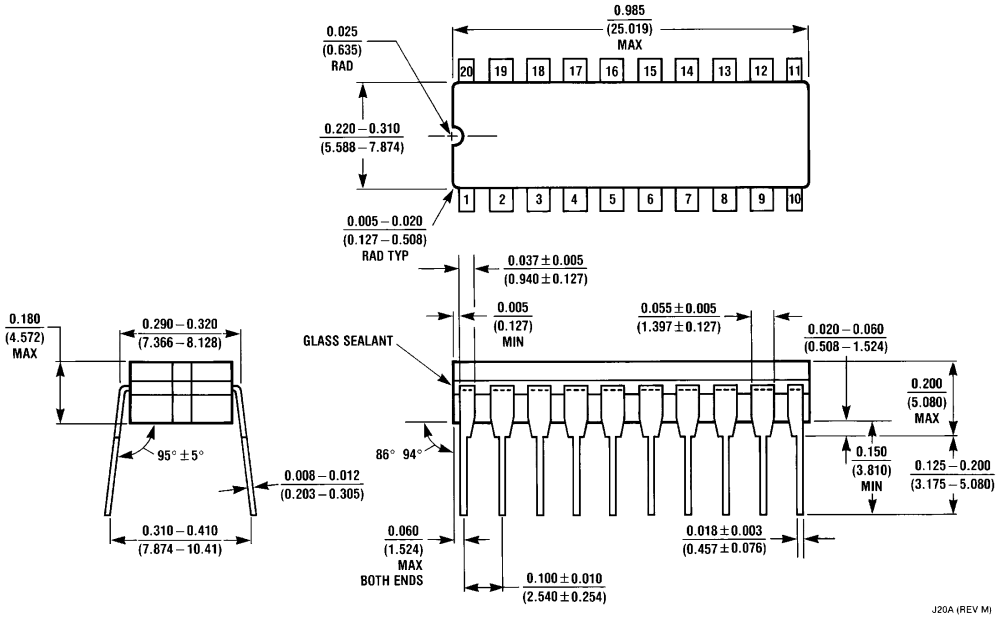

20-Lead Ceramic Dual-In-Line Package (D)
NS Package Number J20A

Physical Dimensions inches (millimeters) (Continued)

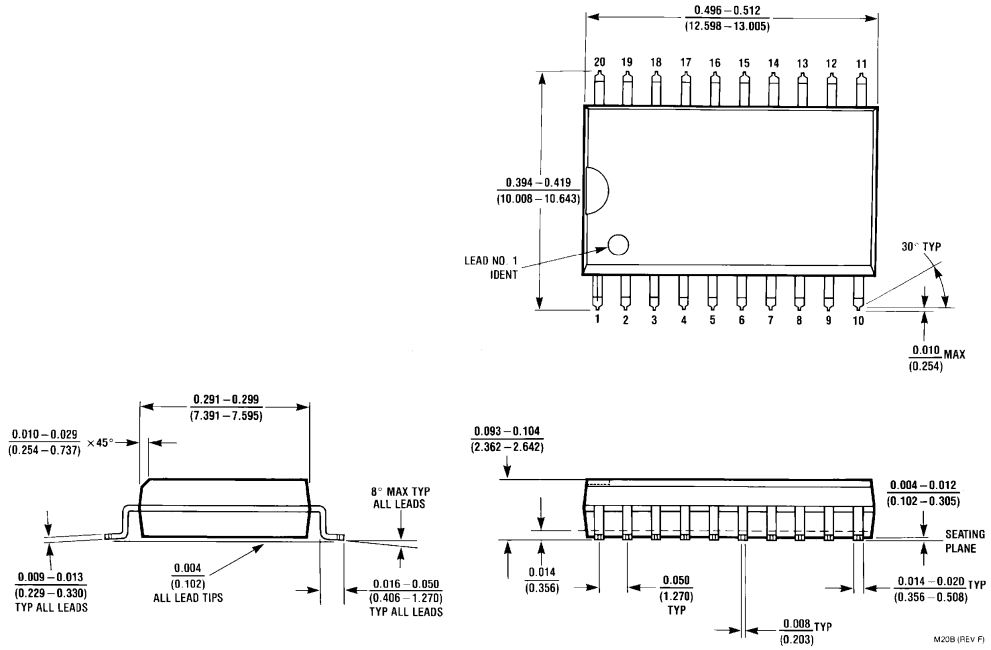

20-Lead (0.300″ Wide) Molded Small Outline Package, JEDEC (S)
NS Package Number M20B

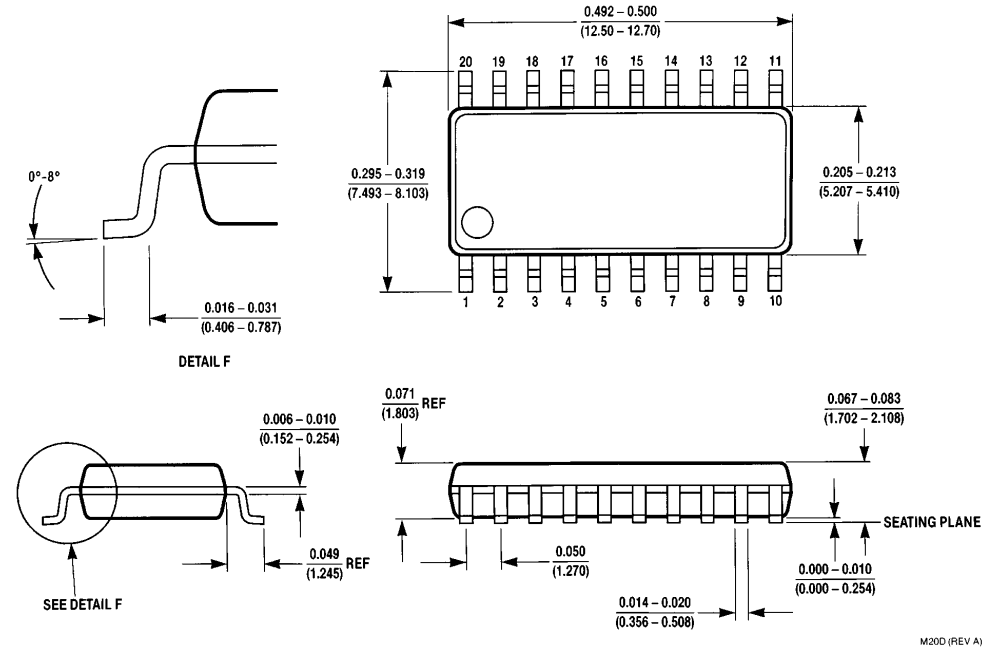

20-Lead (0.300″ Wide) Molded Small Outline Package, EIAJ (SJ)
NS Package Number M20D

Physical Dimensions inches (millimeters) (Continued)

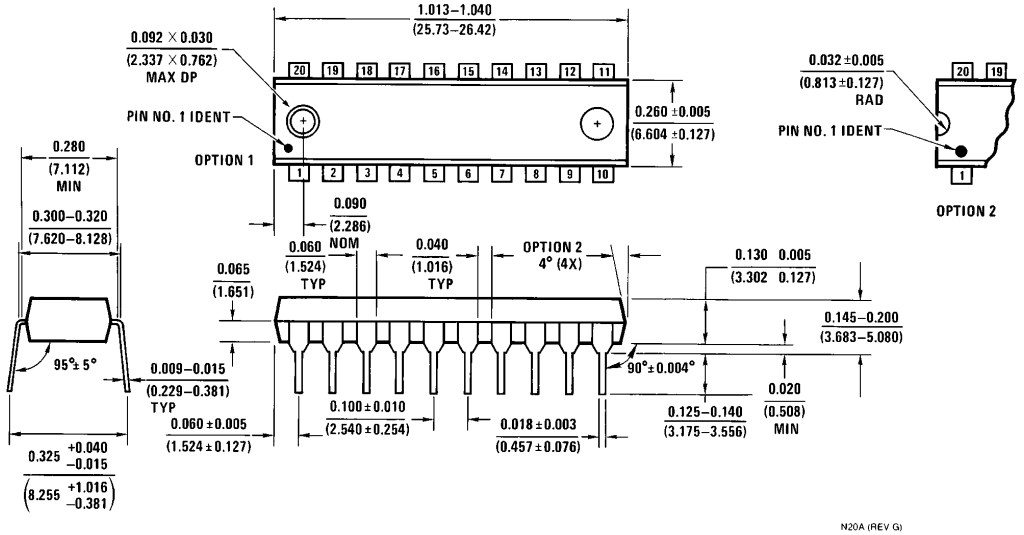

20-Lead (0.300″ Wide) Molded Dual-In-Line Package (P)
NS Package Number N20A

Physical Dimensions inches (millimeters) (Continued)

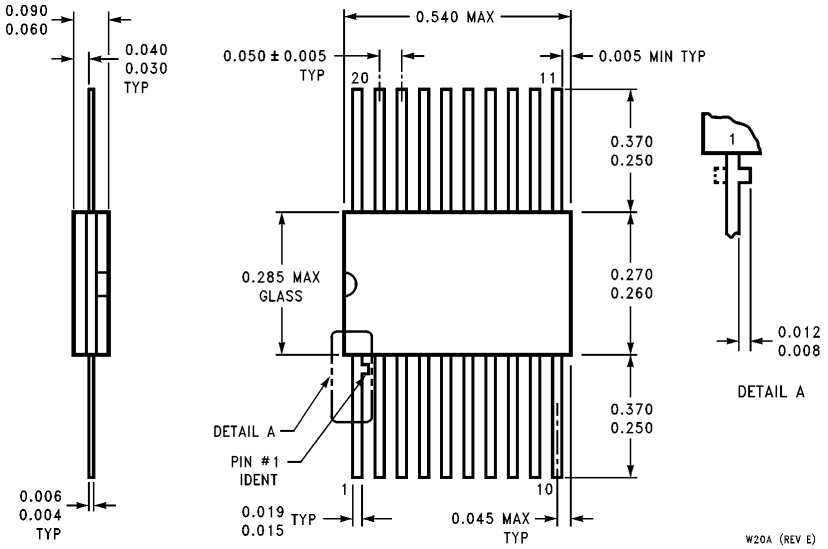

20-Lead Ceramic Flatpak (F)
NS Package Number W20A

LIFE SUPPORT POLICY

NATIONAL'S PRODUCTS ARE NOT AUTHORIZED FOR USE AS CRITICAL COMPONENTS IN LIFE SUPPORT DEVICES OR SYSTEMS WITHOUT THE EXPRESS WRITTEN APPROVAL OF THE PRESIDENT OF NATIONAL SEMICONDUCTOR CORPORATION. As used herein:

1. Life support devices or systems are devices or systems which, (a) are intended for surgical implant into the body, or (b) support or sustain life, and whose failure to perform, when properly used in accordance with instructions for use provided in the labeling, can be reasonably expected to result in a significant injury to the user.
2. A critical component is any component of a life support device or system whose failure to perform can be reasonably expected to cause the failure of the life support device or system, or to affect its safety or effectiveness.

National Semiconductor Corporation
2900 Semiconductor Drive
P.O. Box 58090
Santa Clara, CA 95052-8090
Tel: 1(800) 272-9959
TWX: (910) 339-9240

National Semiconductor GmbH
Livry-Gargan-Str. 10
D-82256 Fürstenfeldbruck
Germany
Tel: (81-41) 35-0
Telex: 527649
Fax: (81-41) 35-1

National Semiconductor Japan Ltd.
Sumitomo Chemical
Engineering Center
Bldg. 7F
1-7-1, Nakase, Mihama-Ku
Chiba-City,
Ciba Prefecture 261
Tel: (043) 299-2300
Fax: (043) 299-2500

National Semiconductor Hong Kong Ltd.
13th Floor, Straight Block,
Ocean Centre, 5 Canton Rd.
Tsimshatsui, Kowloon
Hong Kong
Tel: (852) 2737-1600
Fax: (852) 2736-9960

National Semiconductores Do Brazil Ltda.
Rue Deputado Lacorda Franco
120-3A
Sao Paulo-SP
Brazil 05418-000
Tel: (55-11) 212-5066
Telex: 391-1131931 NSBR BR
Fax: (55-11) 212-1181

National Semiconductor (Australia) Pty, Ltd.
Building 16
Business Park Drive
Monash Business Park
Nottinghill, Melbourne
Victoria 3168 Australia
Tel: (3) 558-9999
Fax: (3) 558-9998

National does not assume any responsibility for use of any circuitry described, no circuit patent licenses are implied and National reserves the right at any time without notice to change said circuitry and specifications.