DATA SHEET

74F373
Octal transparent latch (3-State)
74F374
Octal D flip-flop (3-State)

Product specification

IC15 Data Handbook

1994 Dec 05

PHILIPS

Latch/flip-flop 74F373/74F374

74F373 Octal transparent latch (3-State)
74F374 Octal D-type flip-flop (3-State)

FEATURES

- 8-bit transparent latch — 74F373
- 8-bit positive edge triggered register — 74F374
- 3-State outputs glitch free during power-up and power-down
- Common 3-State output register
- Independent register and 3-State buffer operation
- SSOP Type II Package

DESCRIPTION

The 74F373 is an octal transparent latch coupled to eight 3-State output devices. The two sections of the device are controlled independently by enable (E) and output enable ($\overline{OE}$) control gates.

The data on the D inputs is transferred to the latch outputs when the enable (E) input is high. The latch remains transparent to the data input while E is high, and stores the data that is present one setup time before the high-to-low enable transition.

The 3-State output buffers are designed to drive heavily loaded 3-State buses, MOS memories, or MOS microprocessors.

The active low output enable ($\overline{OE}$) controls all eight 3-State buffers independent of the latch operation. When $\overline{OE}$ is low, latched or transparent data appears at the output.

When $\overline{OE}$ is high, the outputs are in high impedance “off” state, which means they will neither drive nor load the bus.

The 74F374 is an 8-bit edge triggered register coupled to eight 3-State output buffers. The two sections of the device are controlled independently by clock (CP) and output enable ($\overline{OE}$) control gates.

The register is fully edge triggered. The state of the D input, one setup time before the low-to-high clock transition is transferred to the corresponding flip-flop’s Q output.

The 3-State output buffers are designed to drive heavily loaded 3-State buses, MOS memories, or MOS microprocessors.

The active low output enable ($\overline{OE}$) controls all eight 3-State buffers independent of the register operation. When $\overline{OE}$ is low, the data in the register appears at the outputs. When $\overline{OE}$ is high, the outputs are in high impedance “off” state, which means they will neither drive nor load the bus.

TYPE	TYPICAL PROPAGATION DELAY	TYPICAL SUPPLY CURRENT (TOTAL)
74F373	4.5ns	35mA

TYPE	TYPICAL f_{max}	TYPICAL SUPPLY CURRENT (TOTAL)
74F374	165MHz	55mA

ORDERING INFORMATION

DESCRIPTION	ORDER CODE COMMERCIAL RANGE V_{CC} = 5V ±10%, T_{amb} = 0°C to +70°C	PKG DWG #
20-pin plastic DIP	N74F373N, N74F374N	SOT146-1
20-pin plastic SOL	N74F373D, N74F374D	SOT163-1
20-pin plastic SSOP type II	N74F373DB, N74374DB	SOT399-1

INPUT AND OUTPUT LOADING AND FAN OUT TABLE

PINS	DESCRIPTION	74F (U.L.) HIGH/LOW	LOAD VALUE HIGH/LOW
D0 - D7	Data inputs	1.0/1.0	20µA/0.6mA
E (74F373)	Enable input (active high)	1.0/1.0	20µA/0.6mA
$\overline{OE}$	Output enable inputs (active low)	1.0/1.0	20µA/0.6mA
CP (74F374)	Clock pulse input (active rising edge)	1.0/1.0	20µA/0.6mA
Q0 - Q7	3-State outputs	150/40	3.0mA/24mA

NOTE: One (1.0) FAST unit load is defined as: 20µA in the high state and 0.6mA in the low state.

PIN CONFIGURATION – 74F373

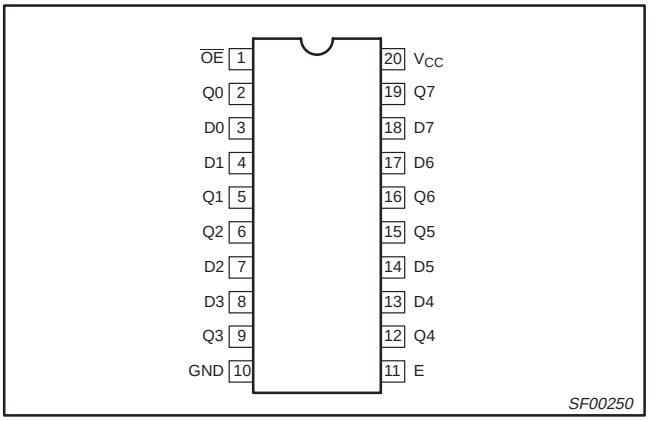

PIN CONFIGURATION – 74F374

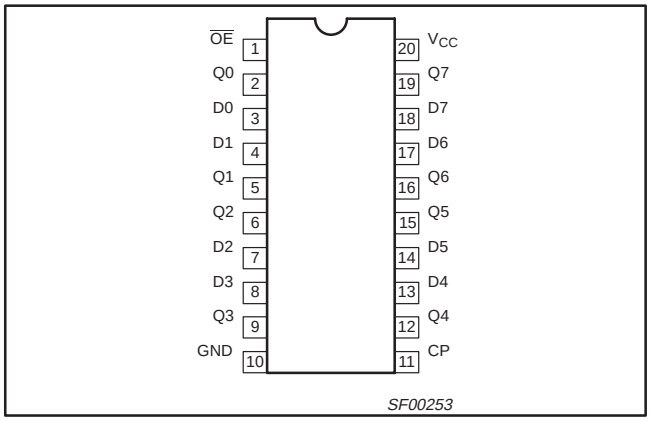

LOGIC SYMBOL – 74F373

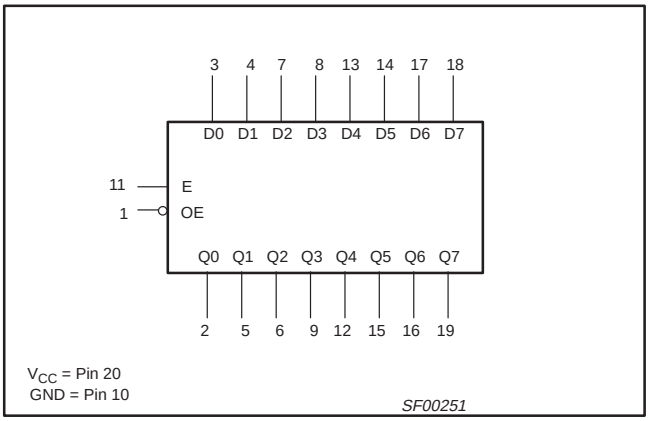

IEC/IEE SYMBOL – 74F374

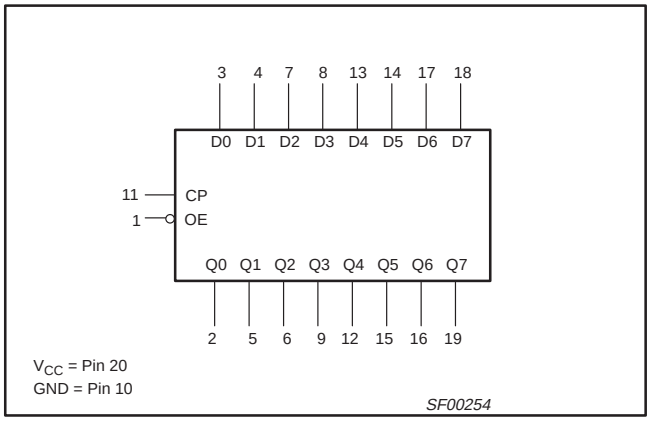

IEC/IEEE SYMBOL – 74F373

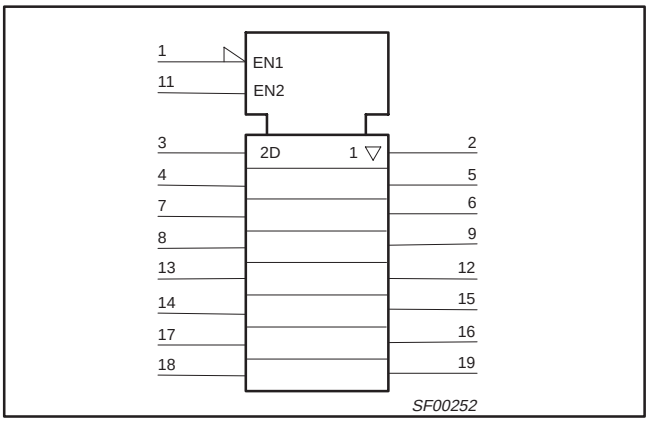

IEC/IEEE SYMBOL – 74F374

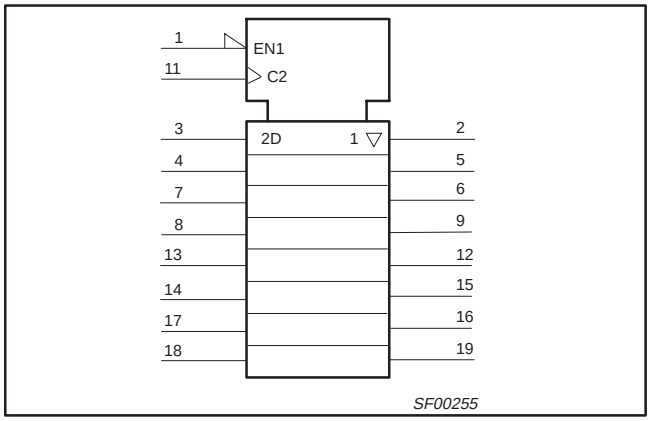

LOGIC DIAGRAM FOR 74F373

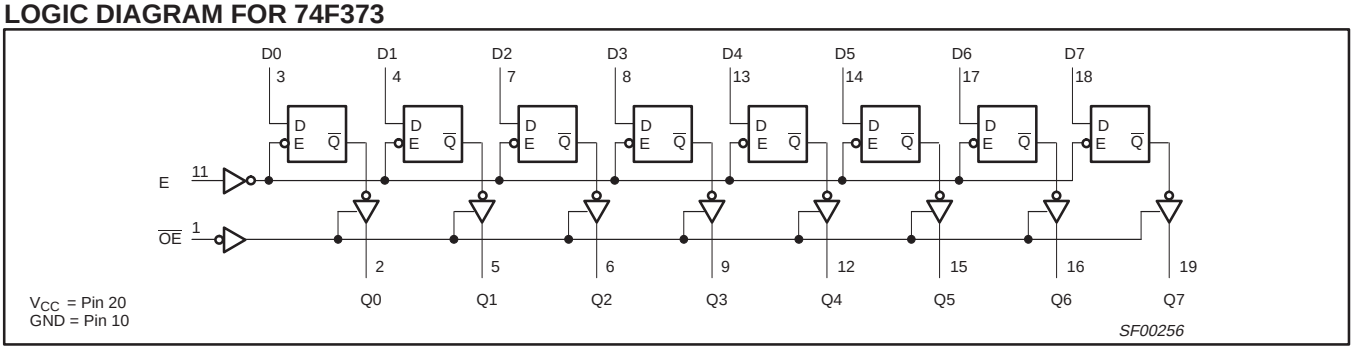

LOGIC DIAGRAM FOR 74F374

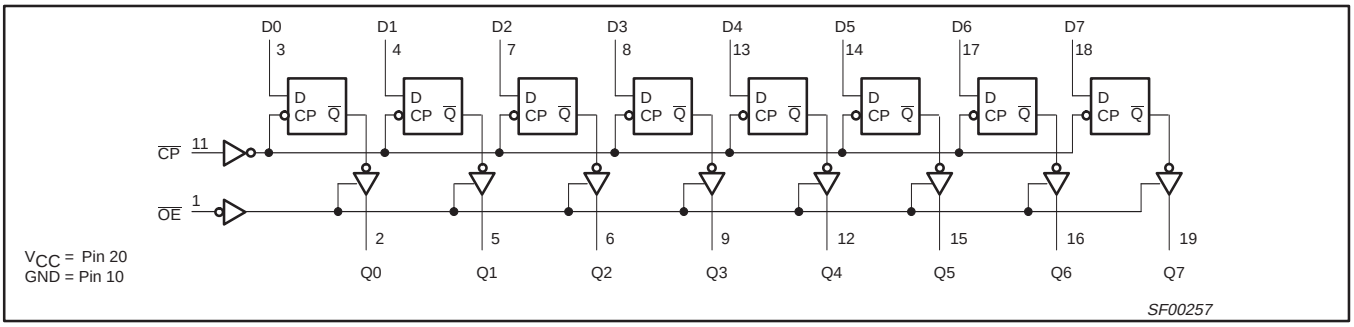

FUNCTION TABLE FOR 74F373

INPUTS			INTERNAL REGISTER	OUTPUTS	OPERATING MODE
$\overline{OE}$	E	Dn		Q0 - Q7	
L	H	L	L	L	Enable and read register
L	H	H	H	H	
L	↓	l	L	L	Latch and read register
L	↓	h	H	H	
L	L	X	NC	NC	Hold
H	L	X	NC	Z	Disable outputs
H	H	Dn	Dn	Z	

NOTES:
H = High-voltage level
h = High state must be present one setup time before the high-to-low enable transition
L = Low-voltage level
l = Low state must be present one setup time before the high-to-low enable transition
NC = No change
X = Don't care
Z = High impedance "off" state
↓ = High-to-low enable transition

FUNCTION TABLE FOR 74F374

INPUTS			INTERNAL	OUTPUTS	OPERATING MODE
$\overline{OE}$	CP	Dn	REGISTER	Q0 - Q7	
L	↑	l	L	L	Load and read register
L	↑	h	H	H	
L	↥	X	NC	NC	Hold
H	↥	X	NC	Z	Disable outputs
H	↑	Dn	Dn	Z	

NOTES:
H = High-voltage level
h = High state must be present one setup time before the low-to-high clock transition
L = Low-voltage level
l = Low state must be present one setup time before the low-to-high clock transition
NC = No change
X = Don't care
Z = High impedance "off" state
↑ = Low-to-high clock transition
↥ = Not low-to-high clock transition

ABSOLUTE MAXIMUM RATINGS

(Operation beyond the limit set forth in this table may impair the useful life of the device. Unless otherwise noted these limits are over the operating free air temperature range.)

SYMBOL	PARAMETER	RATING	UNIT
V_{CC}	Supply voltage	-0.5 to +7.0	V
V_{IN}	Input voltage	-0.5 to +7.0	V
I_{IN}	Input current	-30 to +5	mA
V_{OUT}	Voltage applied to output in high output state	-0.5 to V_{CC}	V
I_{OUT}	Current applied to output in low output state	48	mA
T_{amb}	Operating free air temperature range	0 to +70	°C
T_{stg}	Storage temperature range	-65 to +150	°C

RECOMMENDED OPERATING CONDITIONS

SYMBOL	PARAMETER	LIMITS			UNIT
		MIN	NOM	MAX	
V_{CC}	Supply voltage	4.5	5.0	5.5	V
V_{IH}	High-level input voltage	2.0			V
V_{IL}	Low-level input voltage			0.8	V
I_{Ik}	Input clamp current			-18	mA
I_{OH}	High-level output current			-3	mA
I_{OL}	Low-level output current			24	mA
T_{amb}	Operating free air temperature range	0		+70	°C

DC ELECTRICAL CHARACTERISTICS

(Over recommended operating free-air temperature range unless otherwise noted.)

SYMBOL	PARAMETER		TEST CONDITIONS[1]		LIMITS			UNIT
					MIN	TYP[2]	MAX	
V_{OH}	High-level output voltage		V_{CC} = MIN, V_{IL} = MAX,	±10%V_{CC}	2.4			V
			V_{IH} = MIN, I_{OH} = MAX	±5%V_{CC}	2.7	3.4		V
V_{OL}	Low-level output voltage		V_{CC} = MIN, V_{IL} = MAX,	±10%V_{CC}		0.35	0.50	V
			V_{IH} = MIN, I_{OL} = MAX	±5%V_{CC}		0.35	0.50	V
V_{IK}	Input clamp voltage		V_{CC} = MIN, I_I = I_{IK}			-0.73	-1.2	V
I_I	Input current at maximum input voltage		V_{CC} = MAX, V_I = 7.0V				100	µA
I_{IH}	High-level input current		V_{CC} = MAX, V_I = 2.7V				20	µA
I_{IL}	Low-level input current		V_{CC} = MAX, V_I = 0.5V				-0.6	mA
I_{OZH}	Off-state output current, high-level voltage applied		V_{CC} = MAX, V_O = 2.7V				50	µA
I_{OZL}	Off-state output current, low-level voltage applied		V_{CC} = MAX, V_O = 0.5V				-50	µA
I_{OS}	Short-circuit output current[3]		V_{CC} = MAX		-60		-150	mA
I_{CC}	Supply current (total)	74F373	V_{CC} = MAX			35	60	mA
		74F374				57	86	mA

NOTES:

1. For conditions shown as MIN or MAX, use the appropriate value specified under recommended operating conditions for the applicable type.
2. All typical values are at V_{CC} = 5V, T_{amb} = 25°C.
3. Not more than one output should be shorted at a time. For testing I_{OS}, the use of high-speed test apparatus and/or sample-and-hold techniques are preferable in order to minimize internal heating and more accurately reflect operational values. Otherwise, prolonged shorting of a high output may raise the chip temperature well above normal and thereby cause invalid readings in other parameter tests. In any sequence of parameter tests, I_{OS} tests should be performed last.

AC ELECTRICAL CHARACTERISTICS

SYMBOL	PARAMETER		TEST CONDITION	LIMITS					UNIT
				T_{amb} = +25°C V_{CC} = +5.0V C_L = 50pF, R_L = 500Ω			T_{amb} = 0°C to +70°C V_{CC} = +5.0V ± 10% C_L = 50pF, R_L = 500Ω		
				MIN	TYP	MAX	MIN	MAX	
t_{PLH} t_{PHL}	Propagation delay Dn to Qn	74F373	Waveform 3	3.0 2.0	5.3 3.7	7.0 5.0	3.0 2.0	8.0 6.0	ns
t_{PLH} t_{PHL}	Propagation delay E to Qn		Waveform 2	5.0 3.0	9.0 4.0	11.5 7.0	5.0 3.0	12.0 8.0	ns
t_{PZH} t_{PZL}	Output enable time to high or low level		Waveform 6 Waveform 7	2.0 2.0	5.0 5.6	11.0 7.5	2.0 2.0	11.5 8.5	ns
t_{PHZ} t_{PLZ}	Output disable time from high or low level		Waveform 6 Waveform 7	2.0 2.0	4.5 3.8	6.5 5.0	2.0 2.0	7.0 6.0	ns
f_{max}	Maximum clock frequency	74F374	Waveform 1	150	165		140		ns
t_{PLH} t_{PHL}	Propagation delay CP to Qn		Waveform 1	3.5 3.5	5.0 5.0	7.5 7.5	3.0 3.0	8.5 8.5	ns
t_{PZH} t_{PZL}	Output enable time to high or low level		Waveform 6 Waveform 7	2.0 2.0	9.0 5.3	11.0 7.5	2.0 2.0	12.0 8.5	ns
t_{PHZ} t_{PLZ}	Output disable time from high or low level		Waveform 6 Waveform 7	2.0 2.0	5.3 4.3	6.0 5.5	2.0 2.0	7.0 6.5	ns

AC SETUP REQUIREMENTS

SYMBOL	PARAMETER		TEST CONDITION	LIMITS					UNIT
				T_{amb} = +25°C V_{CC} = +5.0V C_L = 50pF, R_L = 500Ω			T_{amb} = 0°C to +70°C V_{CC} = +5.0V ± 10% C_L = 50pF, R_L = 500Ω		
				MIN	TYP	MAX	MIN	MAX	
t_{su} (H) t_{su} (L)	Setup time, high or low level Dn to E	74F373	Waveform 4	0 1.0			0 1.0		ns
t_h (H) t_h (L)	Hold time, high or low level Dn to E		Waveform 4	3.0 3.0			3.0 3.0		ns
t_w (H)	E Pulse width, high		Waveform 1	3.5			4.0		ns
t_{su} (H) t_{su} (L)	Setup time, high or low level Dn to CP	74F374	Waveform 5	2.0 2.0			2.0 2.0		ns
t_h (H) t_h (L)	Hold time, high or low level Dn to CP		Waveform 5	0 0			0 0		ns
t_w (H) t_w (L)	CP Pulse width, high or low		Waveform 5	3.5 4.0			3.5 4.0		ns

AC WAVEFORMS

For all waveforms, V_M = 1.5V.
The shaded areas indicate when the input is permitted to change for predictable output performance.

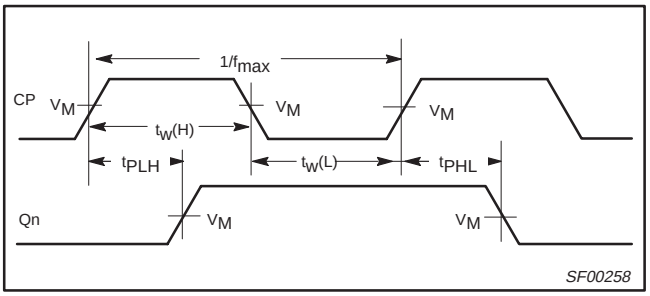

Waveform 1. Propagation delay for clock input to output, clock pulse widths, and maximum clock frequency

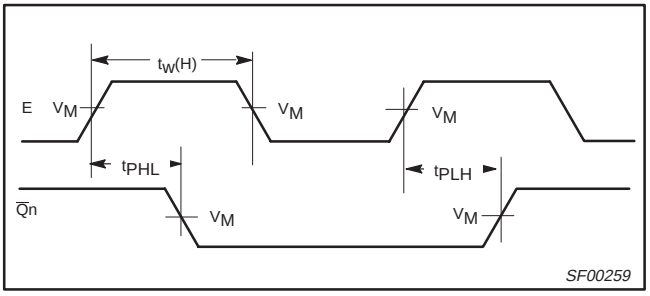

Waveform 2. Propagation delay for enable to output and enable pulse width

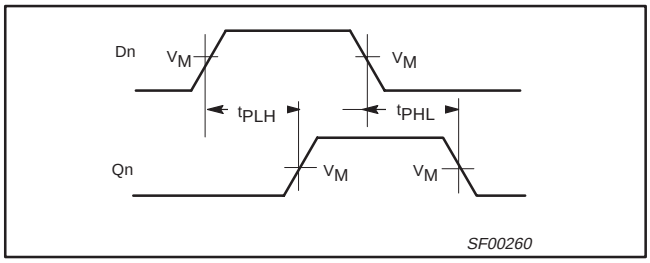

Waveform 3. Propagation delay for data to output

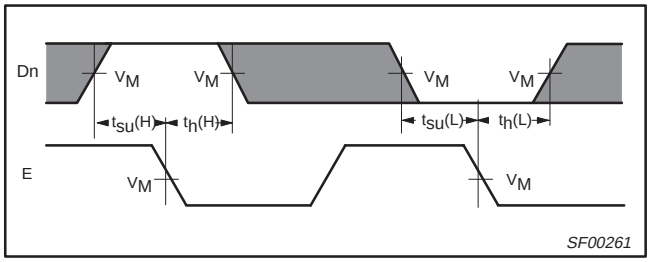

Waveform 4. Data setup time and hold times

AC WAVEFORMS (Continued)

For all waveforms, V_M = 1.5V.
The shaded areas indicate when the input is permitted to change for predictable output performance.

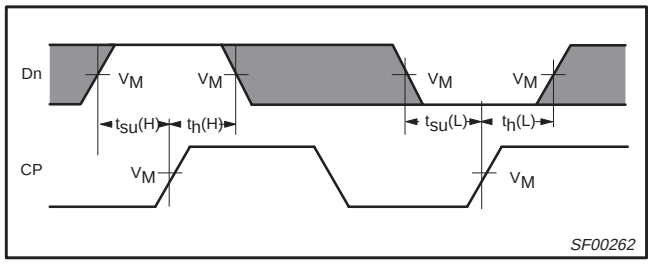

Waveform 5. Data setup time and hold times

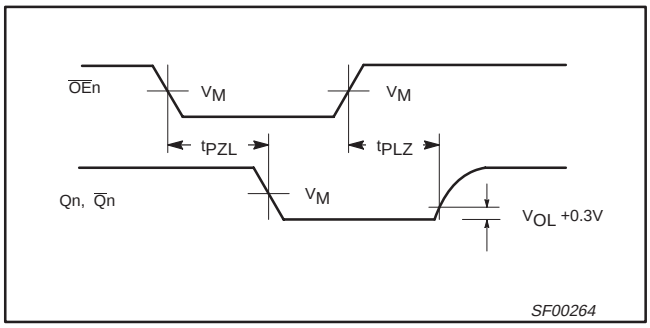

Waveform 7. 3-State output enable time to low level and output disable time from low level

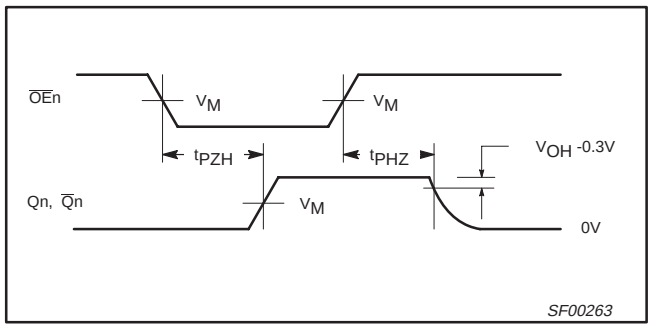

Waveform 6. 3-State output enable time to high level and output disable time from high level

TEST CIRCUIT AND WAVEFORMS

SWITCH POSITION

TEST	SWITCH
t_{PLZ}, t_{PZL}	closed
All other	open

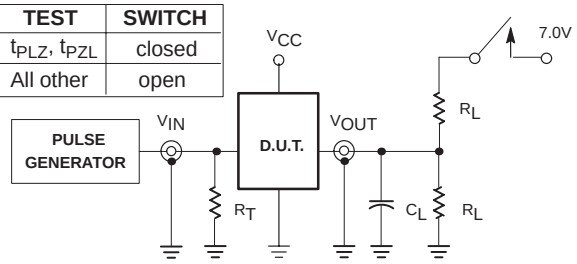

Test circuit for 3-state outputs

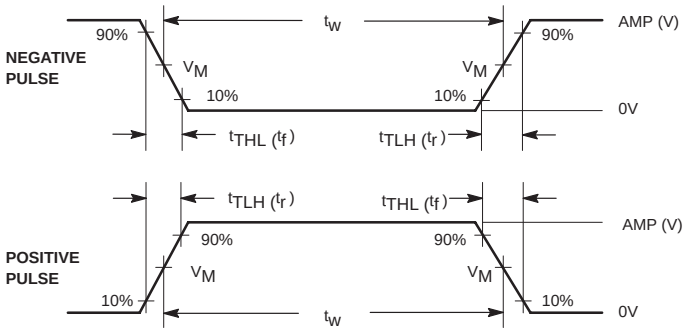

Input pulse definition

DEFINITIONS:

R_L = Load resistor; see AC electrical characteristics for value.

C_L = Load capacitance includes jig and probe capacitance; see AC electrical characteristics for value.

R_T = Termination resistance should be equal to Z_{OUT} of pulse generators.

family	INPUT PULSE REQUIREMENTS					
	amplitude	V_M	rep. rate	t_w	t_{TLH}	t_{THL}
74F	3.0V	1.5V	1MHz	500ns	2.5ns	2.5ns

SF00265

DIP20: plastic dual in-line package; 20 leads (300 mil) SOT146-1

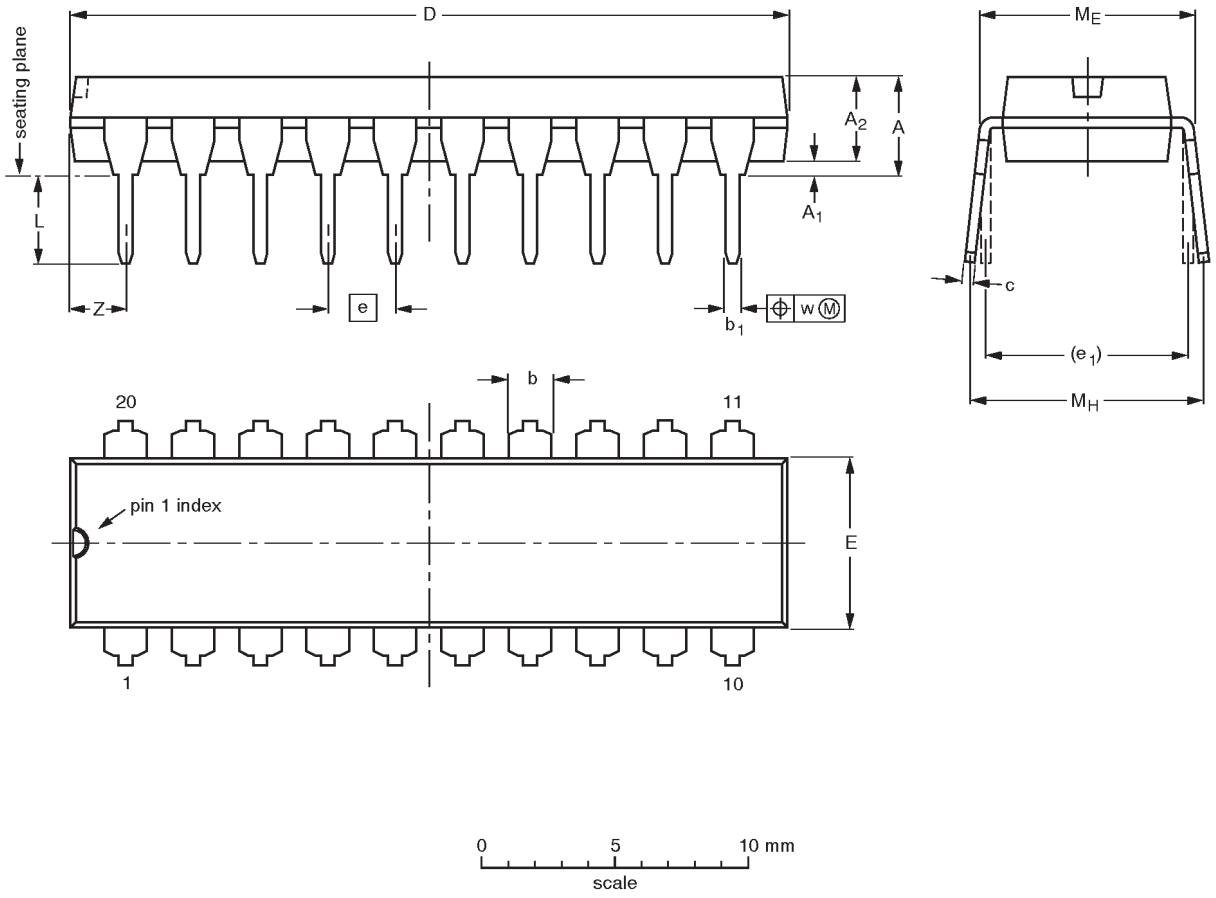

DIMENSIONS (inch dimensions are derived from the original mm dimensions)

UNIT	A max.	A_1 min.	A_2 max.	b	b_1	c	D (1)	E (1)	e	e_1	L	M_E	M_H	w	Z (1) max.
mm	4.2	0.51	3.2	1.73 1.30	0.53 0.38	0.36 0.23	26.92 26.54	6.40 6.22	2.54	7.62	3.60 3.05	8.25 7.80	10.0 8.3	0.254	2.0
inches	0.17	0.020	0.13	0.068 0.051	0.021 0.015	0.014 0.009	1.060 1.045	0.25 0.24	0.10	0.30	0.14 0.12	0.32 0.31	0.39 0.33	0.01	0.078

Note

1. Plastic or metal protrusions of 0.25 mm maximum per side are not included.

OUTLINE VERSION	REFERENCES				EUROPEAN PROJECTION	ISSUE DATE
	IEC	JEDEC	EIAJ			
SOT146-1			SC603			~~92-11-17~~ 95-05-24

SO20: plastic small outline package; 20 leads; body width 7.5 mm **SOT163-1**

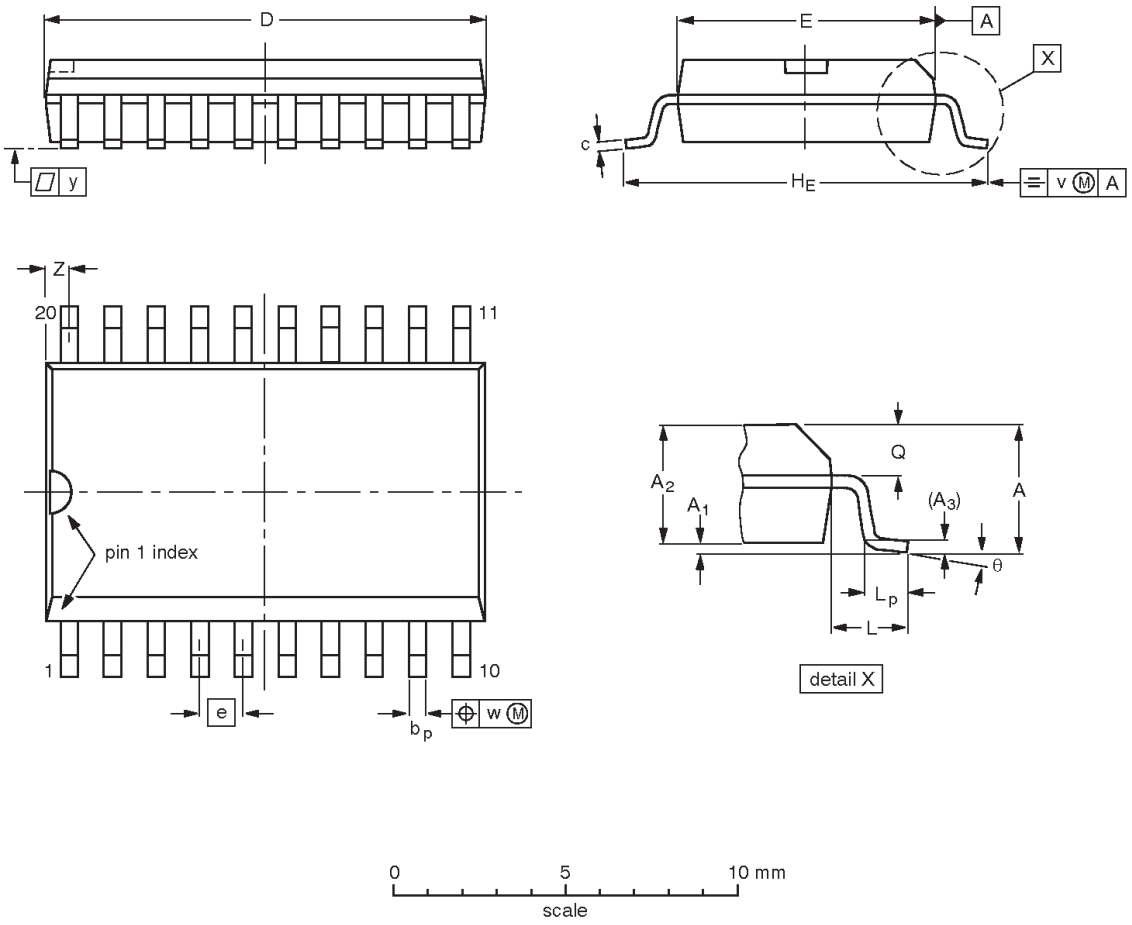

DIMENSIONS (inch dimensions are derived from the original mm dimensions)

UNIT	A max.	A_1	A_2	A_3	b_p	c	D (1)	E (1)	e	H_E	L	L_p	Q	v	w	y	Z (1)	θ
mm	2.65	0.30 0.10	2.45 2.25	0.25	0.49 0.36	0.32 0.23	13.0 12.6	7.6 7.4	1.27	10.65 10.00	1.4	1.1 0.4	1.1 1.0	0.25	0.25	0.1	0.9 0.4	8° 0°
inches	0.10	0.012 0.004	0.096 0.089	0.01	0.019 0.014	0.013 0.009	0.51 0.49	0.30 0.29	0.050	0.419 0.394	0.055	0.043 0.016	0.043 0.039	0.01	0.01	0.004	0.035 0.016	

Note

1. Plastic or metal protrusions of 0.15 mm maximum per side are not included.

OUTLINE VERSION	REFERENCES				EUROPEAN PROJECTION	ISSUE DATE
	IEC	JEDEC	EIAJ			
SOT163-1	075E04	MS-013AC				~~95-01-24~~ 97-05-22

NOTES

DEFINITIONS

Data Sheet Identification	Product Status	Definition
Objective Specification	Formative or in Design	This data sheet contains the design target or goal specifications for product development. Specifications may change in any manner without notice.
Preliminary Specification	Preproduction Product	This data sheet contains preliminary data, and supplementary data will be published at a later date. Philips Semiconductors reserves the right to make changes at any time without notice in order to improve design and supply the best possible product.
Product Specification	Full Production	This data sheet contains Final Specifications. Philips Semiconductors reserves the right to make changes at any time without notice, in order to improve design and supply the best possible product.

Philips Semiconductors and Philips Electronics North America Corporation reserve the right to make changes, without notice, in the products, including circuits, standard cells, and/or software, described or contained herein in order to improve design and/or performance. Philips Semiconductors assumes no responsibility or liability for the use of any of these products, conveys no license or title under any patent, copyright, or mask work right to these products, and makes no representations or warranties that these products are free from patent, copyright, or mask work right infringement, unless otherwise specified. Applications that are described herein for any of these products are for illustrative purposes only. Philips Semiconductors makes no representation or warranty that such applications will be suitable for the specified use without further testing or modification.

LIFE SUPPORT APPLICATIONS
Philips Semiconductors and Philips Electronics North America Corporation Products are not designed for use in life support appliances, devices, or systems where malfunction of a Philips Semiconductors and Philips Electronics North America Corporation Product can reasonably be expected to result in a personal injury. Philips Semiconductors and Philips Electronics North America Corporation customers using or selling Philips Semiconductors and Philips Electronics North America Corporation Products for use in such applications do so at their own risk and agree to fully indemnify Philips Semiconductors and Philips Electronics North America Corporation for any damages resulting from such improper use or sale.

Philips Semiconductors
811 East Arques Avenue
P.O. Box 3409
Sunnyvale, California 94088–3409
Telephone 800-234-7381

Philips Semiconductors and Philips Electronics North America Corporation register eligible circuits under the Semiconductor Chip Protection Act.
© Copyright Philips Electronics North America Corporation 1994
All rights reserved. Printed in U.S.A.

(print code) Date of release: July 1994

Document order number: 9397-750-05119