ABCircuits

Turning Ideas Into Reality

ABCircuits www.abcircuits.com POB 123 New Hill NC 27562 (919) 290-7104

74C922-SO IC

Keyboard / Keypad Encoder for up to 16 switches
MM74C922 Replacement IC

General Description

The 74C922-SO is designed as a replacement chip for the obsolete MM74C922 surface mount part. The 74C922-SO contains all the logic necessary to encode a SPST keyboard switch array up to 4 by 4 in size and provide a 4 bit parallel output and a data available signal. The data available signal goes high when a key is pressed, and goes low before another key output is generated. The data output pins keep their state even after the key is released. The array can be a 4 x 4 array, but smaller arrays such as a 3 x 4 array or any smaller size can be used. The 74C922-SO handles debouncing of the keys as well. No external capacitors are required for timing; all timing is internally generated. No external diodes are required in the array to prevent key ghosting in a two key rollover situation. A .1 uF bypass capacitor is suggested across the VDD and VSS pins. The part uses the standard 20 pin .3 inch width SOIC package.

Features

- Replacement Chip for MM74C922
- Fully encodes a key switch array. (up to 4 x 4)
- No external parts required.
- Low power consumption 1.5 mA typical.
- Supply voltage 2.4 to 5.25 volts.
- Last key pressed retained on data outputs.
- All timing internally generated.
- 2 Key rollover.
- On chip row input resistors.
- Internal key bounce elimination.
- TTL and CMOS compatible outputs.
- Part is in full production.
- SOIC 20 Pin Package.
- ROHS Compliant
- Low EMI

Example Circuit

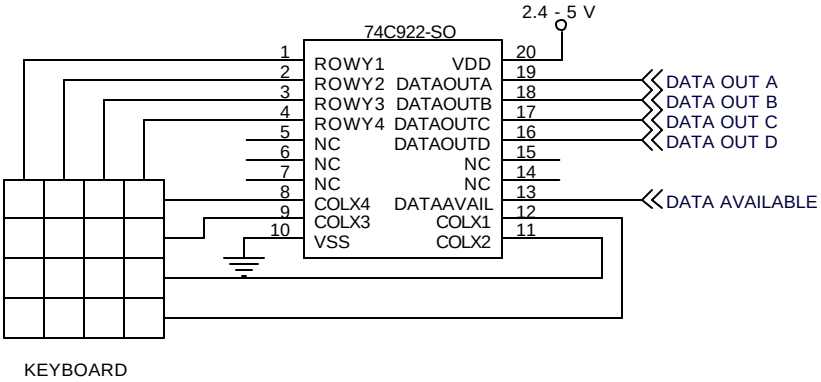

Connection Diagram

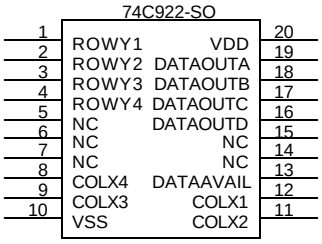

Pin Description

Pin #	Description	Pin #	Description
1	Row Y1	20	VDD
2	Row Y2	19	Data Out A
3	Row Y3	18	Data Out B
4	Row Y4	17	Data Out C
5	NC	16	Data Out D
6	NC	15	NC
7	NC	14	NC
8	Col X4	13	Data Avail
9	Col X3	12	Col X1
10	VSS	21	Col X2

Col X1 – Col X4
These pins are open drain column driver outputs to the key matrix.

Row Y1 – Row Y4
These pins are the row inputs from the key matrix. These inputs have 5.6K (nominal) pull up resistors on chip.

Data Out A – Data Out D

These pins are the encoded data output. The output keeps the state of the last key pressed even after the key is released. These pins are TTL and CMOS compatible.

Data Avail

This pin goes high when a key is pressed, and low when a key is released. This pin goes low in a two key rollover situation before returning high. This pin is TTL and CMOS compatible.

VSS

Connect to system ground.

VDD

Connect to supply voltage of 2.4 to 5 volts. A .1 uF decoupling capacitor to ground is recommended.

NOTES:

No connection is required to the NC pins. If external capacitors are used on pins 6 and 7 from your previous design, they do not need to be removed. If pin 14 is grounded on your previous design, it does not need to be changed. Pins 5 and 15 must be left unconnected.

Truth Table

	COLX1	COLX2	COLX3	COLX4	DATAOUTD	DATAOUTC	DATAOUTB	DATAOUTA
ROWY1	X				0	0	0	0
ROWY1		X			0	0	0	1
ROWY1			X		0	0	1	0
ROWY1				X	0	0	1	1
ROWY2	X				0	1	0	0
ROWY2		X			0	1	0	1
ROWY2			X		0	1	1	0
ROWY2				X	0	1	1	1
ROWY3	X				1	0	0	0
ROWY3		X			1	0	0	1
ROWY3			X		1	0	1	0
ROWY3				X	1	0	1	1
ROWY4	X				1	1	0	0
ROWY4		X			1	1	0	1
ROWY4			X		1	1	1	0
ROWY4				X	1	1	1	1

Absolute Maximum Ratings

Symbol	Description	Min	Typical	Max	Units	Notes
T_{stg}	Storage Temperature	-55	25	+100	ºC	
T_a	Operating Temperature	-40		+85	ºC	
V_{dd}	V_{dd} - V_{ss} Voltage	-0.5		+6.0	V	
V_{io}	Input Voltage	V_{ss} - 0.5		V_{dd} +0.5	V	
I_{mio}	Maximum current into any pin	-25		+50	mA	
ESD	Electrostatic Discharge Voltage	2000			V	Human Body Model ESD
LU	Latch up current			200	mA	

DC Electrical Characteristics

Symbol	Description	Min	Typical	Max	Units	Notes
V_{dd}	Supply Voltage	2.4		5.25	V	
I_{dd}	Supply Current		1.5	8	mA	V_{dd} = 5V
V_{oh}	High Output Level	V_{dd} - 1.0			V	I_{oh}=10 mA
V_{ol}	Low Output Voltage			0.75	V	I_{ol}=25 mA
V_{ih}	Input High Level	2.1			V	
V_{il}	Input Low Level			0.8	V	
I_{oh}	High Level Source Current			10	mA	
I_{ol}	Low Level Sink Current			25	mA	
C_{io}	Capacitive load		3.5	10	pF	
I_{il}	Input leakage		1		nA	
R_{pu}	Pull Up Resistors On Row Inputs	4	5.6	8	k?	

Differences between the MM74C922 and 74C922-SO

Power Supply
The MM74C922 part is capable of a supply voltage of 3 to 15 volts. The 74C922-SO has a more limited power supply of 2.4 to 5.25 volts.

Timing Capacitors
The MM74C922 part requires timing capacitors on pins 6 and 7. The 74C922-SO generates all timing internally, and these capacitors are not required. These pins are no connects on the 74C922-SO. If capacitors are present on your design, they do not need to be removed.

Tristate Outputs
The DataOut pins of the MM74C922 are tristate outputs controlled by pin 14 –OutputEnable. The DataOut pins of the 74C922-SO are not tristate. Pin 14 is a no connect, and may be grounded or left open. If your design needs tristate outputs, consult the factory for solutions.

Timing
The timing of the 74C922-SO is more relaxed. The data setup to Data Avail timing is longer, and the low output time in a two key roll over situation is improved.

Theory Of Operation

The 74C922-SO is a custom programmed microprocessor designed to emulate the MM74C922. The open drain COLX pins are pulsed low one at a time, and the ROWY pins are sampled to check for key switch closures. If a key is detected, scanning stops until the key is released. The pressed key is encoded and placed on the DataOut pins, and the DataAvail output is set low until the key is released. When the key is released, the DataAvail output is set high again and scanning continues.

Physical Dimensions

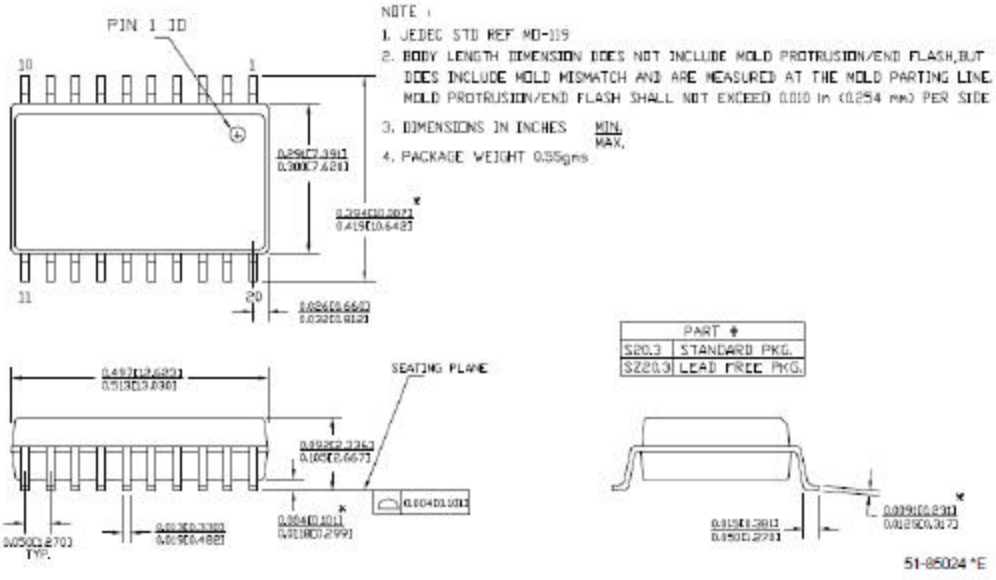

MM74C922.com is a part of: