DATA SHEET

74ALVCH162245

16-bit bus transceiver with direction pin and 30Ω termination resistor (3-State)

Product specification

1998 Jun 29

IC24 Data Handbook

Philips
Semiconductors

PHILIPS

16-bit bus transceiver with direction pin and 30Ω termination resistor (3-State)

74ALVCH162245

FEATURES

- Wide supply voltage range of 1.2V to 3.6V
- Complies with JEDEC standard no. 8-1A
- CMOS low power consumption
- MULTIBYTE™ flow-through standard pin-out architecture
- Low inductance multiple V_{CC} and ground pins for minimum noise and ground bounce
- Direct interface with TTL levels
- Bus hold on all data inputs
- Integrated 30Ω termination resistor

DESCRIPTION

The 74ALVCH162245 is a 16-bit transceiver featuring non-inverting 3-State bus compatible outputs in both send and receive directions.

The 74ALVCH162245 features two output enable ($n\overline{OE}$) inputs for easy cascading and two send/receive (nDIR) inputs for direction control. $n\overline{OE}$ controls the outputs so that the buses are effectively isolated. This device can be used as two 8-bit transceivers or one 16-bit transceiver.

The 74ALVCH162245 is designed with 30Ω series resistors in both HIGH and LOW output states.

The 74ALVCH162245 has active bus hold circuitry which is provided to hold unused or floating data inputs at a valid logic level. This feature eliminates the need for external pull-up or pull-down resistors.

PIN CONFIGURATION

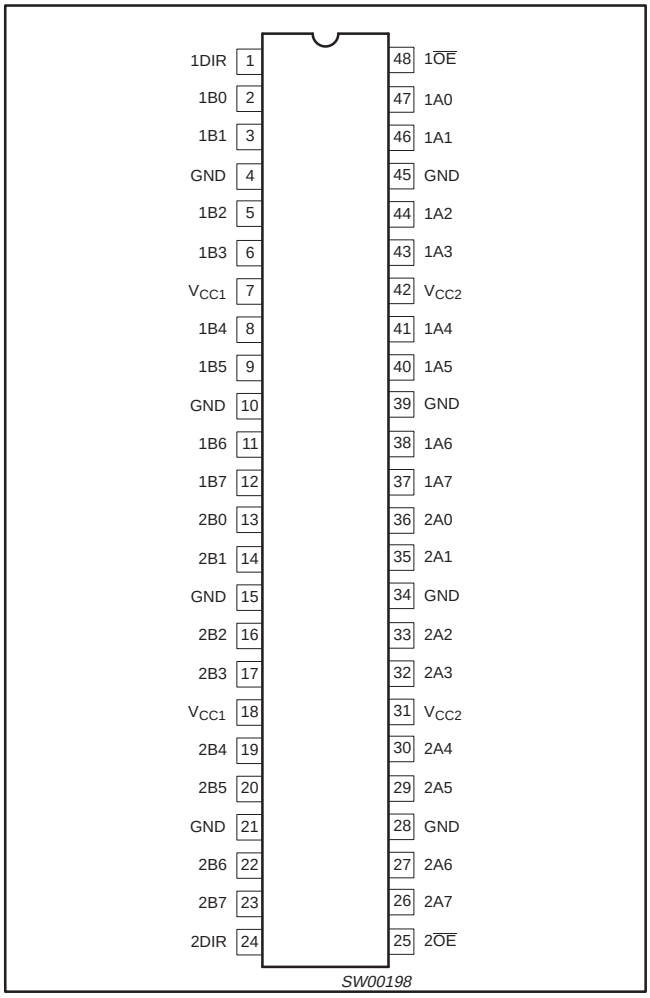

QUICK REFERENCE DATA

GND = 0V; T_{amb} = 25°C; $t_r = t_f \leq 2.5$ns

SYMBOL	PARAMETER	CONDITIONS		TYPICAL	UNIT
t_{PHL}/t_{PLH}	Propagation delay An to Bn; Bn to An	V_{CC} = 2.5V, C_L = 30pF V_{CC} = 3.3V, C_L = 50pF		2.4	ns
C_I	Input capacitance			4.0	pF
$C_{I/O}$	Input/output capacitance			8.0	pF
C_{PD}	Power dissipation capacitance per buffer	V_I = GND to V_{CC}[1]	Outputs enabled	27	pF
			Outputs disabled	4	pF

NOTES:

1. C_{PD} is used to determine the dynamic power dissipation (P_D in μW):
   $P_D = C_{PD} \times V_{CC}^2 \times f_i + \Sigma (C_L \times V_{CC}^2 \times f_o)$ where: f_i = input frequency in MHz; C_L = output load capacitance in pF; f_o = output frequency in MHz; V_{CC} = supply voltage in V; $\Sigma (C_L \times V_{CC}^2 \times f_o)$ = sum of the outputs.

ORDERING INFORMATION

PACKAGES	TEMPERATURE RANGE	OUTSIDE NORTH AMERICA	NORTH AMERICA	DWG NUMBER
48-Pin Plastic SSOP Type III	–40°C to +85°C	74ALVCH162245 DL	ACH162245 DL	SOT370-1
48-Pin Plastic TSSOP Type II	–40°C to +85°C	74ALVCH162245 DGG	ACH162245 DGG	SOT362-1

PIN DESCRIPTION

PIN NUMBER	SYMBOL	NAME AND FUNCTION
1	1DIR	Direction control
2, 3, 5, 6, 8, 9, 11, 12	1B0 to 1B7	Data inputs/outputs
4, 10, 15, 21, 28, 34, 39, 45	GND	Ground (0V)
7, 18, 31, 42	V_{CC}	Positive supply voltage
13, 14, 16, 17, 19, 20, 22, 23	2B0 to 2B7	Data inputs/outputs
24	2DIR	Direction control
25	$2\overline{OE}$	Output enable input (active LOW)
36, 35, 33, 32, 30, 29, 27, 26	2A0 to 2A7	Data inputs/outputs
47, 46, 44, 43, 41, 40, 38, 37	1A0 to 1A7	Data inputs/outputs
48	$1\overline{OE}$	Output enable input (active LOW)

LOGIC SYMBOL

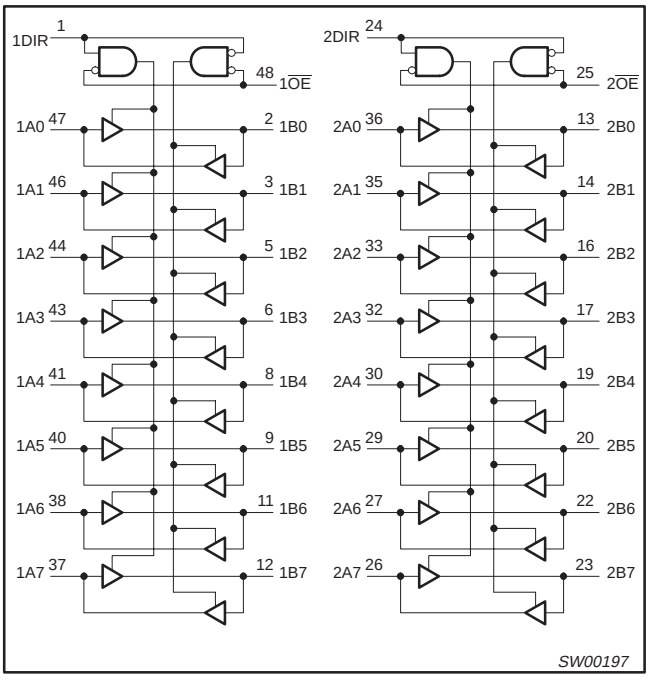

FUNCTION TABLE

INPUTS		INPUTS/OUTPUT	
nOE	**nDIR**	**nAn**	**nBn**
L	L	A = B	inputs
L	H	inputs	B = A
H	X	Z	Z

H = HIGH voltage level
L = LOW voltage level
X = don't care
Z = high impedance OFF–state

LOGIC SYMBOL (IEEE/IEC)

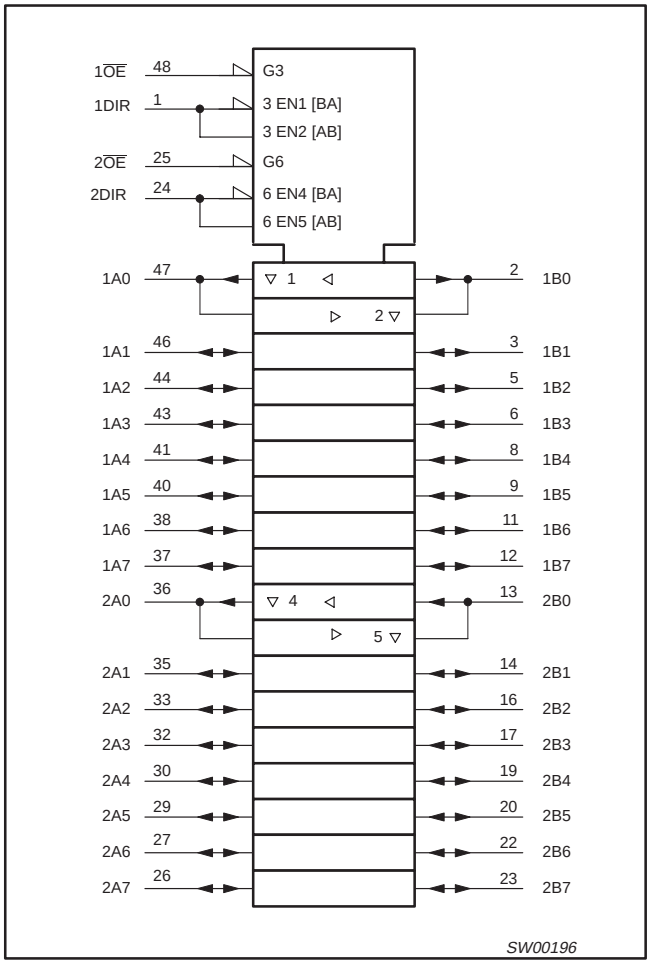

BUS HOLD CIRCUIT

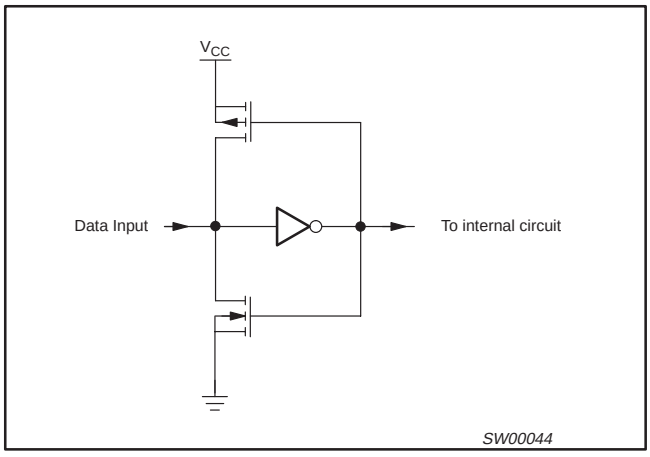

RECOMMENDED OPERATING CONDITIONS

SYMBOL	PARAMETER	CONDITIONS	LIMITS		UNIT
			MIN	MAX	
V_{CC}	DC supply voltage 2.5V range (for max. speed performance @ 30 pF output load)		2.3	2.7	V
	DC supply voltage 3.3V range (for max. speed performance @ 50 pF output load)		3.0	3.6	
V_I	DC Input voltage range		0	V_{CC}	V
V_O	DC output voltage range		0	V_{CC}	V
T_{amb}	Operating free-air temperature range		–40	+85	°C
t_r, t_f	Input rise and fall times	V_{CC} = 2.3 to 3.0V V_{CC} = 3.0 to 3.6V	0 0	20 10	ns/V

ABSOLUTE MAXIMUM RATINGS

In accordance with the Absolute Maximum Rating System (IEC 134)
Voltages are referenced to GND (ground = 0V)

SYMBOL	PARAMETER	CONDITIONS	RATING	UNIT
V_{CC}	DC supply voltage		–0.5 to +4.6	V
I_{IK}	DC input diode current	$V_I < 0$	–50	mA
V_I	DC input voltage	For data inputs with bus hold[1]	–0.5 to V_{CC} +0.5	V
		For control pins[1]	–0.5 to +4.6	
I_{OK}	DC output diode current	$V_O > V_{CC}$ or $V_O < 0$	±50	mA
V_O	DC output voltage	Note 1	–0.5 to V_{CC} +0.5	V
I_O	DC output source or sink current	V_O = 0 to V_{CC}	±50	mA
I_{GND}, I_{CC}	DC V_{CC} or GND current		±100	mA
T_{stg}	Storage temperature range		–65 to +150	°C
P_{TOT}	Power dissipation per package –plastic medium-shrink (SSOP) –plastic thin-medium-shrink (TSSOP)	For temperature range: –40 to +125 °C above +55°C derate linearly with 11.3 mW/K above +55°C derate linearly with 8 mW/K	 850 600	mW

NOTE:
1. The input and output voltage ratings may be exceeded if the input and output current ratings are observed.

DC ELECTRICAL CHARACTERISTICS

Over recommended operating conditions. Voltage are referenced to GND (ground = 0 V).

SYMBOL	PARAMETER	TEST CONDITIONS	LIMITS			UNIT
			Temp = -40°C to +85°C			
			MIN	TYP[1]	MAX	
V_{IH}	HIGH level Input voltage	V_{CC} = 2.3 to 2.7V	1.7	1.2		V
		V_{CC} = 2.7 to 3.6V	2.0	1.5		
V_{IL}	LOW level Input voltage	V_{CC} = 2.3 to 2.7V		1.2	0.7	V
		V_{CC} = 2.7 to 3.6V		1.5	0.8	
V_{OH}	HIGH level output voltage	V_{CC} = 2.3 to 3.6V; V_I = V_{IH} or V_{IL}; I_O = –100µA	V_{CC} – 0.2	V_{CC}		V
		V_{CC} = 2.3V; V_I = V_{IH} or V_{IL}; I_O = –4mA	V_{CC} – 0.4	V_{CC} – 0.11		
		V_{CC} = 2.3V; V_I = V_{IH} or V_{IL}; I_O = –6mA	V_{CC} – 0.6	V_{CC} – 0.17		
		V_{CC} = 2.7V; V_I = V_{IH} or V_{IL}; I_O = –4mA	V_{CC} – 0.5	V_{CC} – 0.09		
		V_{CC} = 2.7V; V_I = V_{IH} or V_{IL}; I_O = –8mA	V_{CC} – 0.7	V_{CC} – 0.19		
		V_{CC} = 3.0V; V_I = V_{IH} or V_{IL}; I_O = –6mA	V_{CC} – 0.6	V_{CC} – 0.13		
		V_{CC} = 3.0V; V_I = V_{IH} or V_{IL}; I_O = –12mA	V_{CC} – 1.0	V_{CC} – 0.27		
V_{OL}	LOW level output voltage	V_{CC} = 2.3 to 3.6V; V_I = V_{IH} or V_{IL}; I_O = 100µA		GND	0.20	V
		V_{CC} = 2.3V; V_I = V_{IH} or V_{IL}; I_O = 4mA		0.07	0.40	
		V_{CC} = 2.3V; V_I = V_{IH} or V_{IL}; I_O = 6mA		0.11	0.55	
		V_{CC} = 2.7V; V_I = V_{IH} or V_{IL}; I_O = 4mA		0.06	0.40	
		V_{CC} = 2.7V; V_I = V_{IH} or V_{IL}; I_O = 8mA		0.13	0.60	
		V_{CC} = 3.0V; V_I = V_{IH} or V_{IL}; I_O = 6mA		0.09	0.55	
		V_{CC} = 3.0V; V_I = V_{IH} or V_{IL}; I_O = 12mA		0.19	0.80	
I_I	Input leakage current per data pin with bus hold	V_{CC} = 2.3 to 3.6V; V_I = V_{CC} or GND		0.1	5	µA
I_{OZ}	3-State output OFF-state current	V_{CC} = 2.3 to 3.6V; V_I = V_{IH} or V_{IL}; V_O = V_{CC} or GND		0.1	10	µA
I_{CC}	Quiescent supply current	V_{CC} = 2.3 to 3.6V; V_I = V_{CC} or GND; I_O = 0		0.2	40	µA
ΔI_{CC}	Additional quiescent supply current given per data I/O pin with bus hold	V_{CC} = 2.3V to 3.6V; V_I = V_{CC} – 0.6V; I_O = 0		150	750	µA
I_{BHL}[2]	Bus hold LOW sustaining current	V_{CC} = 2.3V; V_I = 0.7V	45	–		µA
		V_{CC} = 3.0V; V_I = 0.8V	75	150		
I_{BHH}[2]	Bus hold HIGH sustaining current	V_{CC} = 2.3V; V_I = 1.7V	–45			µA
		V_{CC} = 3.0V; V_I = 2.0V	–75	–175		
I_{BHLO}[2]	Bus hold LOW overdrive current	V_{CC} = 3.6V	500			µA
I_{BHHO}[2]	Bus hold HIGH overdrive current	V_{CC} = 3.6V	–500			µA

NOTES:
1. All typical values are at T_{amb} = 25°C.
2. Valid for data inputs of bus hold parts.

AC CHARACTERISTICS FOR V_{CC} = 2.3V TO 2.7V RANGE

GND = 0V; $t_r = t_f \leq 2.0$ns; C_L = 30pF

SYMBOL	PARAMETER	WAVEFORM	LIMITS			UNIT
			V_{CC} = 2.3 to 2.7V			
			MIN	TYP[1, 2]	MAX	
t_{PHL}/t_{PLH}	Propagation delay nAn to nBn; nBn to nAn	1, 3	1.0	2.5	4.9	ns
t_{PZH}/t_{PZL}	3-State output enable time $n\overline{OE}$ to nAn; $n\overline{OE}$ to nBn	2, 3	1.0	2.9	6.8	ns
t_{PHZ}/t_{PLZ}	3-State output disable time $n\overline{OE}$ to nAn; $n\overline{OE}$ to nBn	2, 3	1.0	3.0	6.3	ns

NOTES:
1. All typical values are measured T_{amb} = 25°C.
2. Typical value is measured at V_{CC} = 2.5V

AC CHARACTERISTICS FOR V_{CC} = 3.0V TO 3.6V RANGE AND V_{CC} = 2.7V

GND = 0V; $t_r = t_f \leq 2.5$ns; C_L = 50pF

SYMBOL	PARAMETER	WAVEFORM	LIMITS						UNIT
			$V_{CC} = 3.3 \pm 0.3$V			V_{CC} = 2.7V			
			MIN	TYP[1, 2]	MAX	MIN	TYP[1]	MAX	
t_{PHL}/t_{PLH}	Propagation delay nAn to nBn; nBn to nAn	1, 3	1.0	2.4	4.2	1.0	2.7	4.7	ns
t_{PZH}/t_{PZL}	3-State output enable time $n\overline{OE}$ to nAn; $n\overline{OE}$ to nBn	2, 3	1.0	3.0	5.6	1.0	3.9	6.7	ns
t_{PHZ}/t_{PLZ}	3-State output disable time $n\overline{OE}$ to nAn; $n\overline{OE}$ to nBn	2, 3	1.0	2.6	5.5	1.0	2.9	5.7	ns

NOTES:
1. All typical values are measured T_{amb} = 25°C.
2. Typical value is measured at V_{CC} = 3.3V

AC WAVEFORMS FOR V_{CC} = 2.3V TO 2.7V AND V_{CC} < 2.3V RANGE

$V_M = 0.5\ V_{CC}$
$V_X = V_{OL} + 0.15V$
$V_Y = V_{OH} – 0.15V$
V_{OL} and V_{OH} are the typical output voltage drop that occur with the output load.
$V_I = V_{CC}$

AC WAVEFORMS FOR V_{CC} = 3.0V TO 3.6V AND V_{CC} = 2.7V RANGE

$V_M = 1.5\ V$
$V_X = V_{OL} + 0.3V$
$V_Y = V_{OH} – 0.3V$
V_{OL} and V_{OH} are the typical output voltage drop that occur with the output load.
$V_I = 2.7V$

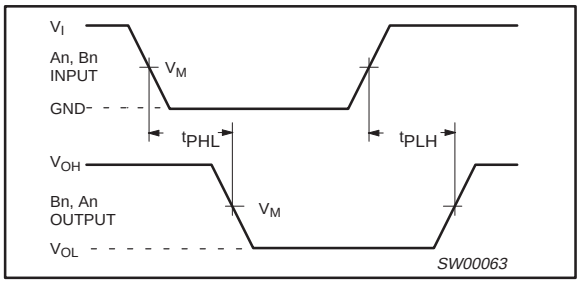

Waveform 1. Input (nAn, nBn) to output (nBn, nAn) propagation delay times

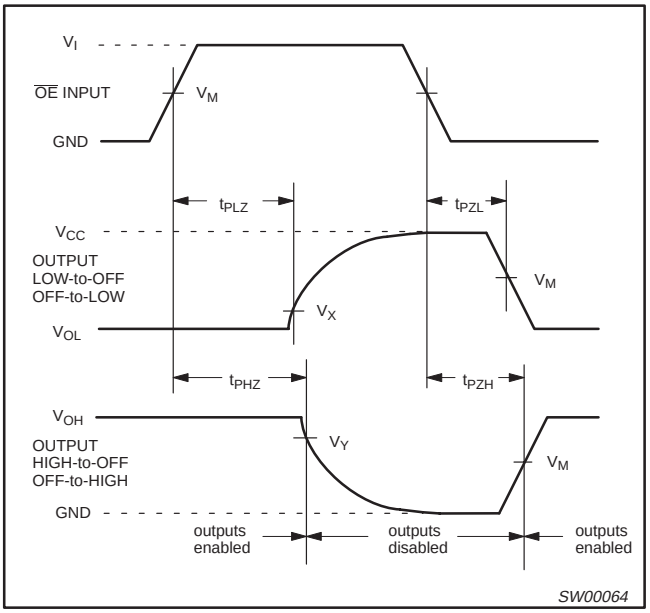

Waveform 2. 3-State enable and disable times

TEST CIRCUIT

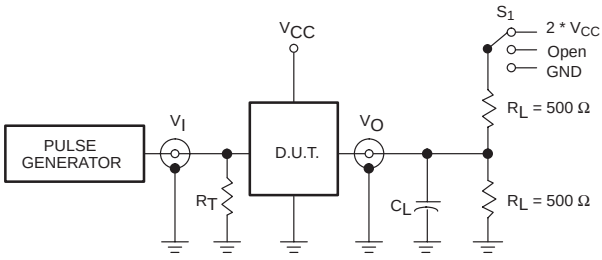

Test Circuit for switching times

DEFINITIONS

R_L = Load resistor

C_L = Load capacitance includes jig and probe capacitance

R_T = Termination resistance should be equal to Z_{OUT} of pulse generators.

SWITCH POSITION

TEST	S_1
t_{PLH}/t_{PHL}	Open
t_{PLZ}/t_{PZL}	2 * V_{CC}
t_{PHZ}/t_{PZH}	GND

V_{CC}	V_I
< 2.7V	V_{CC}
2.7–3.6V	2.7V

SV00906

Waveform 3. Load circuitry for switching times

SSOP48: plastic shrink small outline package; 48 leads; body width 7.5 mm **SOT370-1**

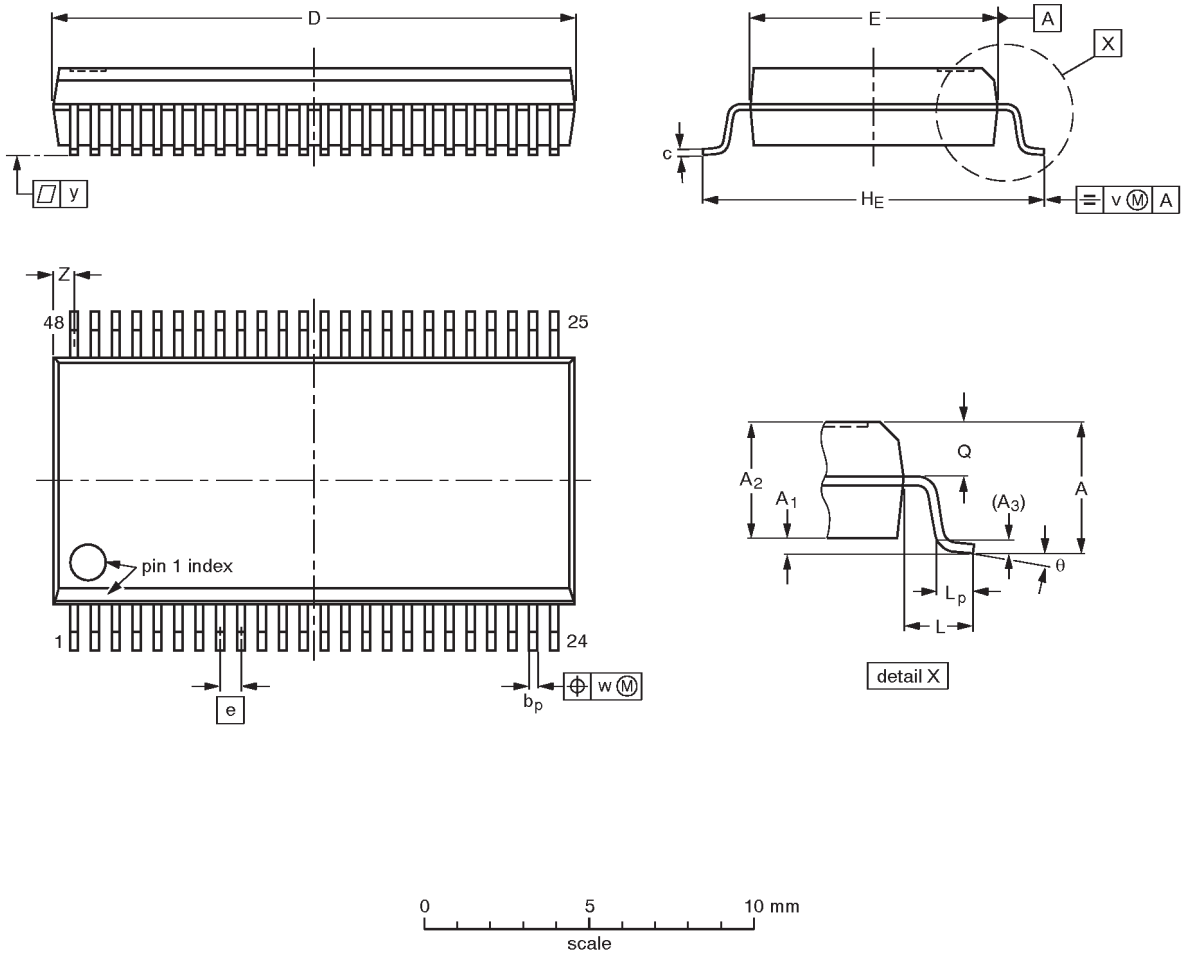

DIMENSIONS (mm are the original dimensions)

UNIT	A max.	A_1	A_2	A_3	b_p	c	D (1)	E (1)	e	H_E	L	L_p	Q	v	w	y	Z (1)	θ
mm	2.8	0.4 0.2	2.35 2.20	0.25	0.3 0.2	0.22 0.13	16.00 15.75	7.6 7.4	0.635	10.4 10.1	1.4	1.0 0.6	1.2 1.0	0.25	0.18	0.1	0.85 0.40	8° 0°

Note

1. Plastic or metal protrusions of 0.25 mm maximum per side are not included.

OUTLINE VERSION	REFERENCES				EUROPEAN PROJECTION	ISSUE DATE
	IEC	JEDEC	EIAJ			
SOT370-1		MO-118AA				~~93-11-02~~ 95-02-04

TSSOP48: plastic thin shrink small outline package; 48 leads; body width 6.1mm SOT362-1

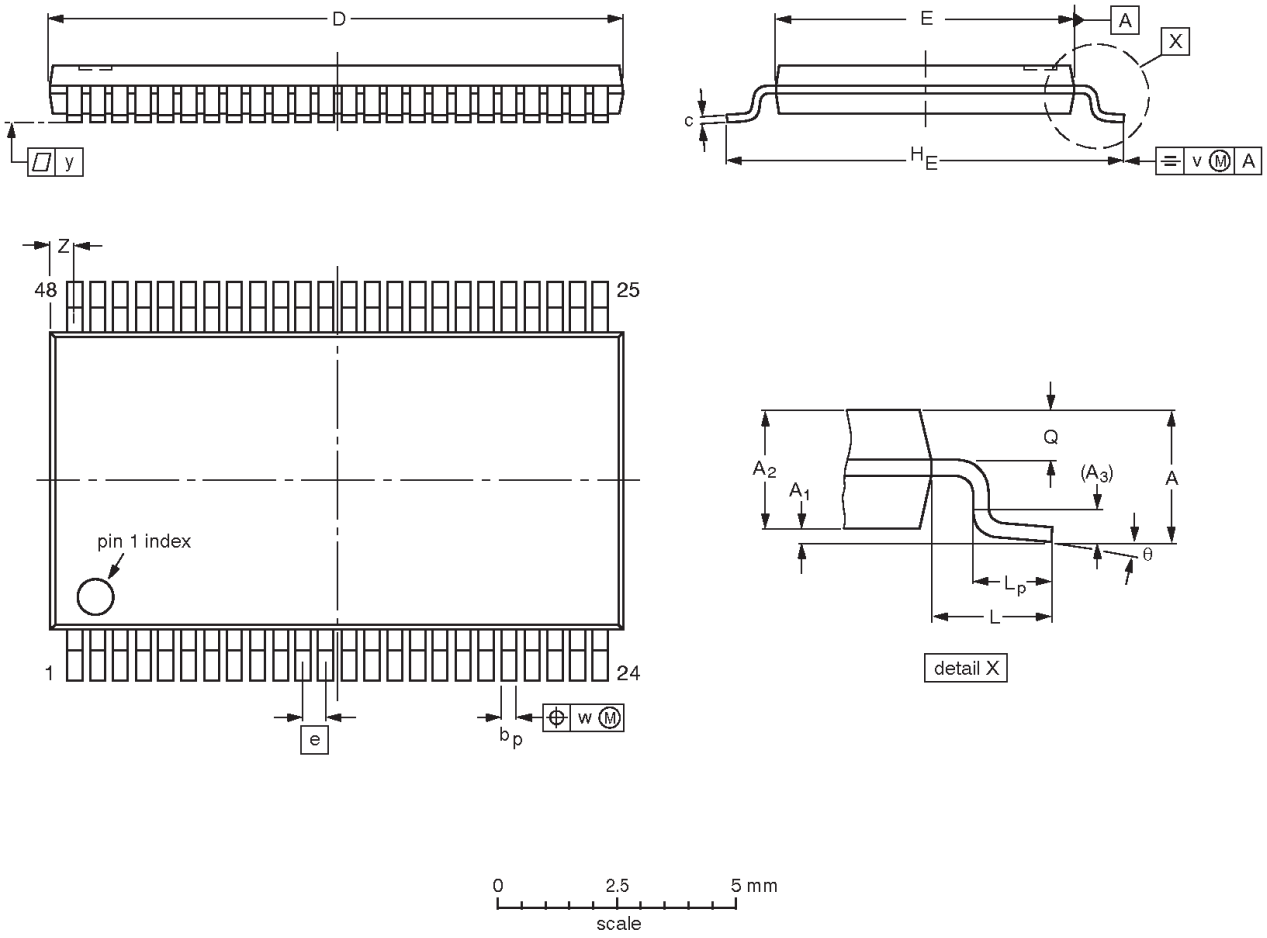

DIMENSIONS (mm are the original dimensions).

UNIT	A max.	A_1	A_2	A_3	b_p	c	$D^{(1)}$	$E^{(2)}$	e	H_E	L	L_p	Q	v	w	y	Z	θ
mm	1.2	0.15 0.05	1.05 0.85	0.25	0.28 0.17	0.2 0.1	12.6 12.4	6.2 6.0	0.5	8.3 7.9	1	0.8 0.4	0.50 0.35	0.25	0.08	0.1	0.8 0.4	8° 0°

Notes

1. Plastic or metal protrusions of 0.15 mm maximum per side are not included.
2. Plastic interlead protrusions of 0.25 mm maximum per side are not included.

OUTLINE VERSION	REFERENCES					EUROPEAN PROJECTION	ISSUE DATE
	IEC	JEDEC	EIAJ				
SOT362-1		MO-153ED					~~93-02-03~~ 95-02-10

NOTES

Data sheet status

Data sheet status	Product status	Definition [1]
Objective specification	Development	This data sheet contains the design target or goal specifications for product development. Specification may change in any manner without notice.
Preliminary specification	Qualification	This data sheet contains preliminary data, and supplementary data will be published at a later date. Philips Semiconductors reserves the right to make chages at any time without notice in order to improve design and supply the best possible product.
Product specification	Production	This data sheet contains final specifications. Philips Semiconductors reserves the right to make changes at any time without notice in order to improve design and supply the best possible product.

[1] Please consult the most recently issued datasheet before initiating or completing a design.

Definitions

Short-form specification — The data in a short-form specification is extracted from a full data sheet with the same type number and title. For detailed information see the relevant data sheet or data handbook.

Limiting values definition — Limiting values given are in accordance with the Absolute Maximum Rating System (IEC 134). Stress above one or more of the limiting values may cause permanent damage to the device. These are stress ratings only and operation of the device at these or at any other conditions above those given in the Characteristics sections of the specification is not implied. Exposure to limiting values for extended periods may affect device reliability.

Application information — Applications that are described herein for any of these products are for illustrative purposes only. Philips Semiconductors make no representation or warranty that such applications will be suitable for the specified use without further testing or modification.

Disclaimers

Life support — These products are not designed for use in life support appliances, devices or systems where malfunction of these products can reasonably be expected to result in personal injury. Philips Semiconductors customers using or selling these products for use in such applications do so at their own risk and agree to fully indemnify Philips Semiconductors for any damages resulting from such application.

Right to make changes — Philips Semiconductors reserves the right to make changes, without notice, in the products, including circuits, standard cells, and/or software, described or contained herein in order to improve design and/or performance. Philips Semiconductors assumes no responsibility or liability for the use of any of these products, conveys no license or title under any patent, copyright, or mask work right to these products, and makes no representations or warranties that these products are free from patent, copyright, or mask work right infringement, unless otherwise specified.

Philips Semiconductors
811 East Arques Avenue
P.O. Box 3409
Sunnyvale, California 94088–3409
Telephone 800-234-7381

© Copyright Philips Electronics North America Corporation 1998
All rights reserved. Printed in U.S.A.

Date of release: 06-98

Document order number: 9397-750-04539

Let's make things better.

Philips Semiconductors

PHILIPS