DATA SHEET

74ALVC16334A

16-bit registered driver with inverted register enable (3-State)

Product specification
Replaces datasheet 74ALVC16334 of 2000 Jan 04
IC24 Data Handbook

2000 Mar 14

Philips
Semiconductors

PHILIPS

16-bit registered driver with inverted register enable (3-State)

74ALVC16334A

FEATURES

- Wide supply voltage range of 1.2 V to 3.6 V
- Complies with JEDEC standard no. 8-1A.
- CMOS low power consumption
- Direct interface with TTL levels
- Current drive ± 24 mA at 3.0 V
- MULTIBYTE™ flow-through standard pin-out architecture
- Low inductance multiple V_{CC} and GND pins for minimum noise and ground bounce
- Output drive capability 50 Ω transmission lines @ 85°C
- Input diodes to accommodate strong drivers

PIN CONFIGURATION

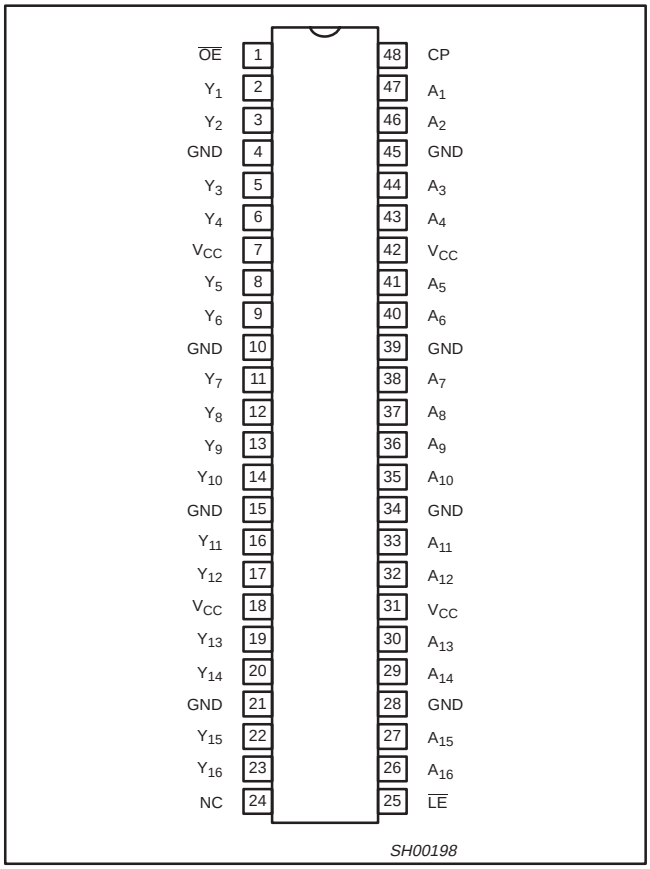

DESCRIPTION

The 74ALVC16334A is a 16–bit universal bus driver. Data flow is controlled by active low output enable ($\overline{OE}$), active low latch enable ($\overline{LE}$) and clock inputs (CP).

When $\overline{LE}$ is LOW, the A to Y data flow is transparent. When $\overline{LE}$ is HIGH and CP is held at LOW or HIGH, the data is latched; on the LOW to HIGH transient of CP the A-data is stored in the latch/flip-flop.

When $\overline{OE}$ is LOW the outputs are active. When $\overline{OE}$ is HIGH, the outputs go to the high impedance OFF-state. Operation of the $\overline{OE}$ input does not affect the state of the latch/flip-flop.

To ensure the high-impedance state during power up or power down, $\overline{OE}$ should be tied to V_{CC} through a pullup resistor; the minimum value of the resistor is determined by the current-sinking capability of the driver.

QUICK REFERENCE DATA

GND = 0 V; T_{amb} = 25°C; $t_r = t_f \leq 2.5$ ns

SYMBOL	PARAMETER	CONDITIONS		TYPICAL	UNIT
t_{PHL}/t_{PLH}	Propagation delay An to Yn; $\overline{LE}$ to Yn; CP to Yn	V_{CC} = 3.3 V, C_L = 50 pF		2.3 2.6 2.5	ns
F_{max}	Maximum clock frequency	V_{CC} = 3.3 V, C_L = 50 pF		350	MHz
C_I	Input capacitance			4.0	pF
$C_{I/O}$	Input/Output capacitance			8.0	pF
C_{PD}	Power dissipation capacitance per buffer	V_I = GND to V_{CC}[1]	transparent mode Output enabled Output disabled	 13 3	pF
			Clocked mode Output enabled Output disabled	 22 15	

NOTE:

1. C_{PD} is used to determine the dynamic power dissipation (P_D in μW):
   $P_D = C_{PD} \times V_{CC}^2 \times f_i + \Sigma (C_L \times V_{CC}^2 \times f_o)$ where: f_i = input frequency in MHz; C_L = output load capacitance in pF; f_o = output frequency in MHz; V_{CC} = supply voltage in V; $\Sigma (C_L \times V_{CC}^2 \times f_o)$ = sum of outputs.

ORDERING INFORMATION

PACKAGES	TEMPERATURE RANGE	ORDER CODE	DRAWING NUMBER
48-Pin Plastic Thin Shrink Small Outline (TSSOP) Type II	–40°C to +85°C	74ALVC16334A DGG	SOT362-1

PIN DESCRIPTION

PIN NUMBER	SYMBOL	NAME AND FUNCTION
24	NC	No connection
2, 3, 5, 6, 8, 9, 11, 12, 13, 14, 16, 17, 19, 20, 22, 23	Y_1 to Y_{16}	Data outputs
4, 10, 15, 21, 28, 34, 39, 45	GND	Ground (0 V)
7, 18, 31, 42	V_{CC}	Positive supply voltage
1	$\overline{OE}$	Output enable input (active LOW)
25	$\overline{LE}$	Latch enable input (active LOW)
48	CP	Clock input
26, 27, 29, 30, 32, 33, 35, 36, 37, 38, 40, 41, 43, 44, 46, 47	A_1 to A_{16}	Data inputs

LOGIC SYMBOL

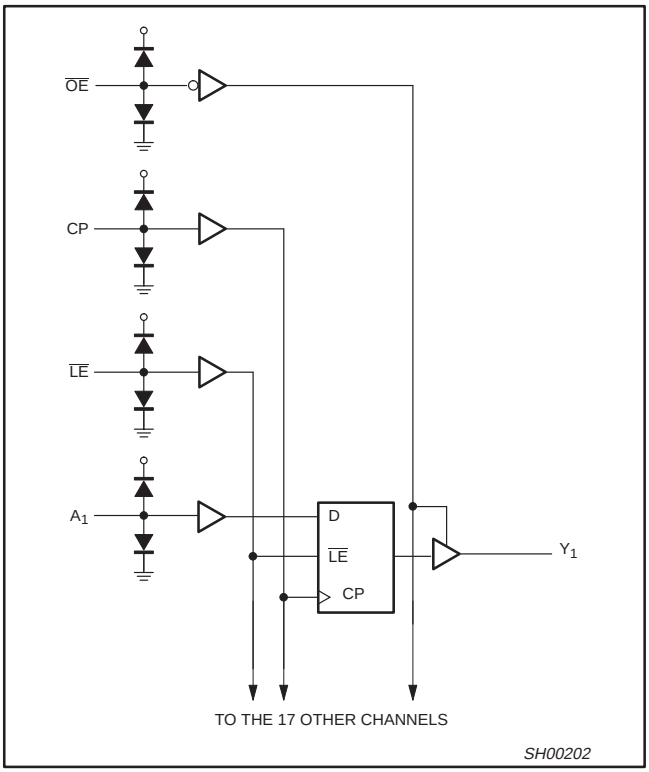

TYPICAL INPUT (DATA OR CONTROL)

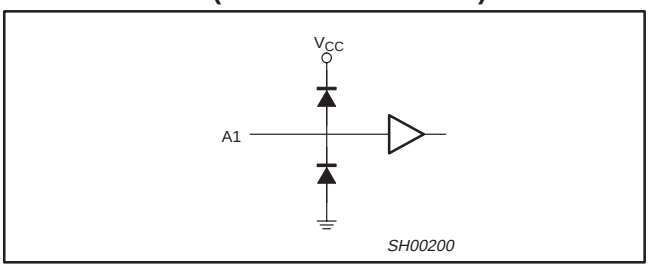

LOGIC SYMBOL (IEEE/IEC)

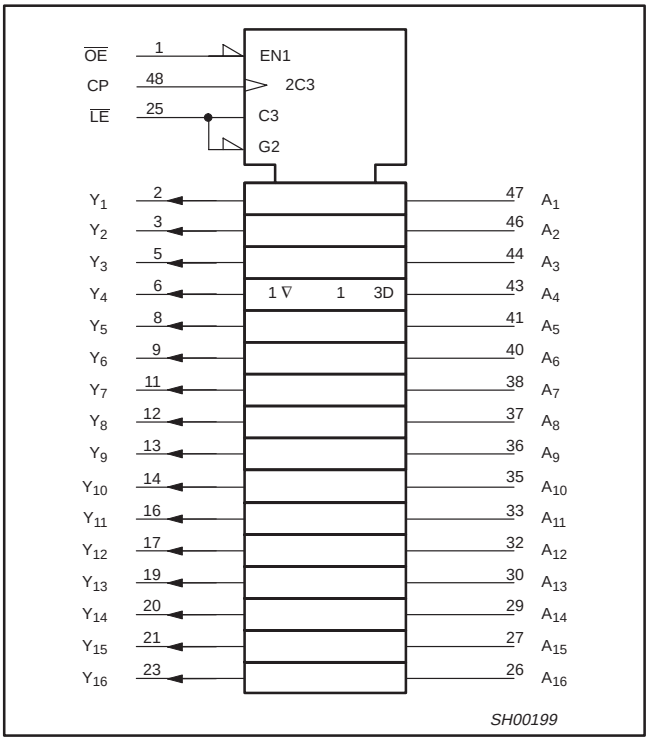

FUNCTION TABLE

INPUTS				OUTPUTS
$\overline{OE}$	$\overline{LE}$	CP	A	
H	X	X	X	Z
L	L	X	L	L
L	L	X	H	H
L	H	↑	L	L
L	H	↑	H	H
L	H	H	X	Y_0[1]
L	H	L	X	Y_0[2]

H = HIGH voltage level
L = LOW voltage level
X = Don't care
Z = High impedance "off" state
↑ = LOW-to-HIGH level transition

NOTES:
1. Output level before the indicated steady-state input conditions were established, provided that CP is high before $\overline{LE}$ goes low.
2. Output level before the indicated steady-state input conditions were established.

RECOMMENDED OPERATING CONDITIONS

SYMBOL	PARAMETER	CONDITIONS	MIN	MAX	UNIT
V_{CC}	DC supply voltage 2.5V range (for max. speed performance @ 30 pF output load)		2.3	2.7	V
	DC supply voltage 3.3V range (for max. speed performance @ 50 pF output load)		3.0	3.6	
	DC supply voltage (for low-voltage applications)		1.2	3.6	
V_I	DC Input voltage range		0	V_{CC}	V
V_O	DC output voltage range		0	V_{CC}	V
T_{amb}	Operating free-air temperature range		–40	+85	°C
t_r, t_f	Input rise and fall times	V_{CC} = 2.3 to 3.0V V_{CC} = 3.0 to 3.6V	0 0	20 10	ns/V

ABSOLUTE MAXIMUM RATINGS

In accordance with the Absolute Maximum Rating System (IEC 134).
Voltages are referenced to GND (ground = 0V).

SYMBOL	PARAMETER	CONDITIONS	RATING	UNIT
V_{CC}	DC supply voltage		–0.5 to +4.6	V
I_{IK}	DC input diode current	$V_I < 0$	–50	mA
V_I	DC input voltage	For control pins[1]	–0.5 to +4.6	V
		For data inputs[1]	–0.5 to V_{CC} +0.5	
I_{OK}	DC output diode current	$V_O > V_{CC}$ or $V_O < 0$	±50	mA
V_O	DC output voltage	Note 1	–0.5 to V_{CC} +0.5	V
I_O	DC output source or sink current	V_O = 0 to V_{CC}	±50	mA
I_{GND}, I_{CC}	DC V_{CC} or GND current		±100	mA
T_{stg}	Storage temperature range		–65 to +150	°C
P_{TOT}	Power dissipation per package –plastic thin-medium-shrink (TSSOP)	For temperature range: –40 to +125 °C above +55°C derate linearly with 8 mW/K	600	mW

NOTE:
1. The input and output voltage ratings may be exceeded if the input and output current ratings are observed.

DC ELECTRICAL CHARACTERISTICS

Over recommended operating conditions. Voltage are referenced to GND (ground = 0 V).

SYMBOL	PARAMETER	TEST CONDITIONS	LIMITS			UNIT
			Temp = –40°C to +85°C			
			MIN	TYP[1]	MAX	
V_{IH}	HIGH level Input voltage	V_{CC} = 2.3 to 2.7V	1.7	1.2		V
		V_{CC} = 2.7 to 3.6V	2.0	1.5		
V_{IL}	LOW level Input voltage	V_{CC} = 2.3 to 2.7V		1.2	0.7	V
		V_{CC} = 2.7 to 3.6V		1.5	0.8	
V_{OH}	HIGH level output voltage	V_{CC} = 2.3 to 3.6V; $V_I = V_{IH}$ or V_{IL}; I_O = –100µA	V_{CC} – 0.2	V_{CC}		V
		V_{CC} = 2.3V; $V_I = V_{IH}$ or V_{IL}; I_O = –6mA	V_{CC} – 0.3	V_{CC} – 0.08		
		V_{CC} = 2.3V; $V_I = V_{IH}$ or V_{IL}; I_O = –12mA	V_{CC} – 0.6	V_{CC} – 0.26		
		V_{CC} = 2.7V; $V_I = V_{IH}$ or V_{IL}; I_O = –12mA	V_{CC} – 0.5	V_{CC} – 0.14		
		V_{CC} = 3.0V; $V_I = V_{IH}$ or V_{IL}; I_O = –12mA	V_{CC} – 0.6	V_{CC} – 0.09		
		V_{CC} = 3.0V; $V_I = V_{IH}$ or V_{IL}; I_O = –24mA	V_{CC} – 1.0	V_{CC} – 0.28		
V_{OL}	LOW level output voltage	V_{CC} = 2.3 to 3.6V; $V_I = V_{IH}$ or V_{IL}; I_O = 100µA		GND	0.20	V
		V_{CC} = 2.3V; $V_I = V_{IH}$ or V_{IL}; I_O = 6mA		0.07	0.40	V
		V_{CC} = 2.3V; $V_I = V_{IH}$ or V_{IL}; I_O = 12mA		0.15	0.70	V
		V_{CC} = 2.7V; $V_I = V_{IH}$ or V_{IL}; I_O = 12mA		0.14	0.40	
		V_{CC} = 3.0V; $V_I = V_{IH}$ or V_{IL}; I_O = 24mA		0.27	0.55	
I_I	Input leakage current	V_{CC} = 2.3 to 3.6V; $V_I = V_{CC}$ or GND		0.1	5	µA
I_{OZ}	3-State output OFF-state current	V_{CC} = 2.3 to 3.6V; $V_I = V_{IH}$ or V_{IL}; $V_O = V_{CC}$ or GND		0.1	10	µA
I_{CC}	Quiescent supply current	V_{CC} = 2.3 to 3.6V; $V_I = V_{CC}$ or GND; I_O = 0		0.2	40	µA
ΔI_{CC}	Additional quiescent supply current	V_{CC} = 2.3V to 3.6V; $V_I = V_{CC}$ – 0.6V; I_O = 0		150	750	µA

NOTE:

1. All typical values are at T_{amb} = 25°C.

AC CHARACTERISTICS FOR V_{CC} = 2.3V TO 2.7V RANGE

GND = 0 V; $t_r = t_f \leq 2.0$ ns; C_L = 30 pF

SYMBOL	PARAMETER	WAVEFORM	LIMITS			UNIT
			V_{CC} = 2.3 to 2.7V			
			MIN	TYP[1]	MAX	
t_{PHL}/t_{PLH}	Propagation delay An to Yn	1, 7	1.0	2.4	4.2	ns
	Propagation delay $\overline{LE}$ to Yn	2, 7	1.3	2.8	4.5	
	Propagation delay CP to Yn	4, 7	1.4	2.8	5.0	
t_{PZH}/t_{PZL}	3-State output enable time $\overline{OE}$ to Yn	6, 7	1.4	2.2	4.0	ns
t_{PHZ}/t_{PLZ}	3-State output disable time $\overline{OE}$ to Yn	6, 7	1.4	2.0	4.5	ns
t_W	CP pulse width HIGH or LOW	4, 7	2.0	–	–	ns
	$\overline{LE}$ pulse width LOW	2, 7	2.0	–	–	
t_{SU}	Set-up time An to CP	5, 7	1.0	–	–	ns
	Set-up time An to $\overline{LE}$	3, 7	1.5	–	–	
t_h	Hold time An to CP	5, 7	0.6	0.2	–	ns
	Hold time An to $\overline{LE}$	3, 7	1.4	0.4	–	
f_{max}	Maximum clock pulse frequency	4, 7	150	300	–	MHz

NOTE:
1. All typical values are at V_{CC} = 3.3V and T_{amb} = 25°C.

AC CHARACTERISTICS FOR V_{CC} = 3.0 V TO 3.6 V RANGE AND V_{CC} = 2.7 V

GND = 0 V; $t_r = t_f \leq 2.5$ ns; C_L = 50 pF

SYMBOL	PARAMETER	WAVEFORM	LIMITS			LIMITS			UNIT
			$V_{CC} = 3.3 \pm 0.3$ V			V_{CC} = 2.7 V			
			MIN	TYP[1, 2]	MAX	MIN	TYP[1]	MAX	
t_{PHL}/t_{PLH}	Propagation delay An to Yn	1, 7	1.0	2.3	3.6	1.3	2.7	4.0	ns
	Propagation delay $\overline{LE}$ to Yn	2, 7	1.3	2.6	4.2	1.3	2.8	4.5	
	Propagation delay CP to Yn	4, 7	1.3	2.5	4.2	1.3	2.7	4.5	
t_{PZH}/t_{PZL}	3-State output enable time $\overline{OE}$ to Yn	6, 7	1.1	2.3	4.4	1.4	3.0	4.5	ns
t_{PHZ}/t_{PLZ}	3-State output disable time $\overline{OE}$ to Yn	6, 7	1.3	2.8	4.3	1.4	3.1	4.5	ns
t_W	CP pulse width HIGH or LOW	4, 7	2.0	–	–	2.0	–	–	ns
	$\overline{LE}$ pulse width LOW	2, 7	2.0	–	–	2.0	–	–	
t_{SU}	Set-up time An to CP	5, 7	1.0	–	–	1.0	–	–	ns
	Set-up time An to $\overline{LE}$	3, 7	1.5	–	–	1.5	–	–	
t_h	Hold time An to CP	5, 7	0.9	0.3	–	0.6	0.3	–	ns
	Hold time An to $\overline{LE}$	3, 7	1.4	0.3	–	1.7	0.4	–	
f_{max}	Maximum clock pulse frequency	4, 7	150	300	–	200	350	–	MHz

NOTES:
1. All typical values are measured T_{amb} = 25°C.
2. Typical value is measured at V_{CC} = 3.3 V.

AC WAVEFORMS FOR V_{CC} = 3.0 V TO 3.6 V AND V_{CC} = 2.7 V RANGE

V_M = 1.5 V
$V_X = V_{OL}$ + 0.3 V
$V_Y = V_{OH}$ – 0.3 V
V_{OL} and V_{OH} are the typical output voltage drop that occur with the output load.
V_I = 2.7 V

AC WAVEFORMS FOR V_{CC} = 2.3 V TO 2.7 V AND V_{CC} < 2.3 V RANGE

$V_M = 0.5\ V_{CC}$
$V_X = V_{OL}$ + 0.15 V
$V_Y = V_{OH}$ – 0.15 V
V_{OL} and V_{OH} are the typical output voltage drop that occur with the output load.
$V_I = V_{CC}$

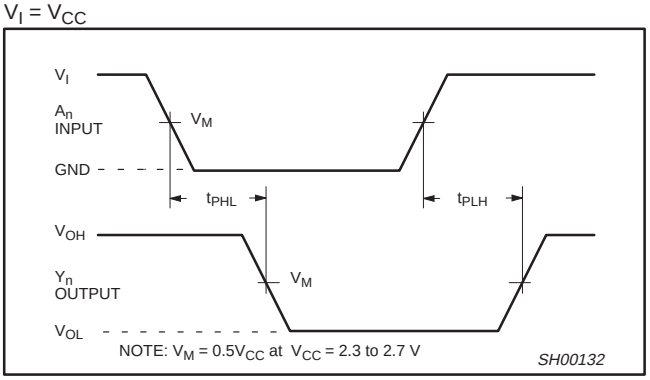

Waveform 1. Input (An) to output (Yn) propagation delay

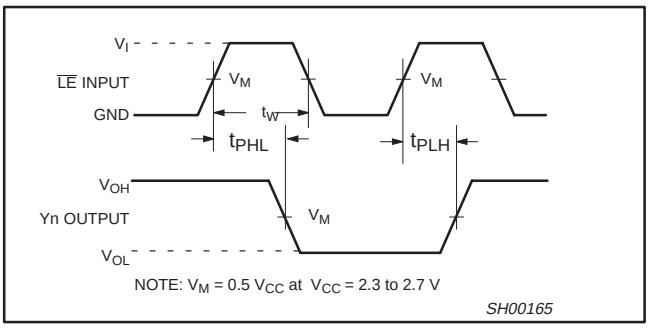

Waveform 2. Latch enable input ($\overline{LE}$) pulse width, the latch enable input to output (Yn) propagation delays.

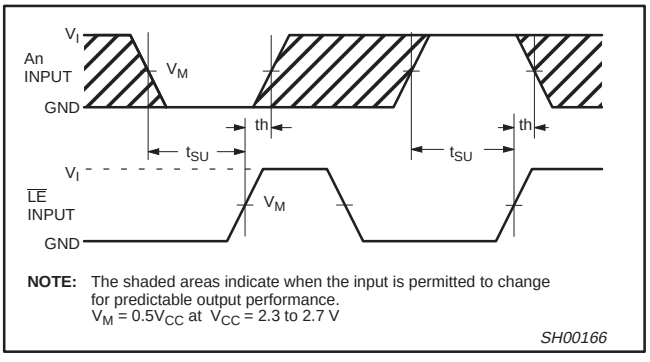

Waveform 3. Data set-up and hold times for the An input to the $\overline{LE}$ input

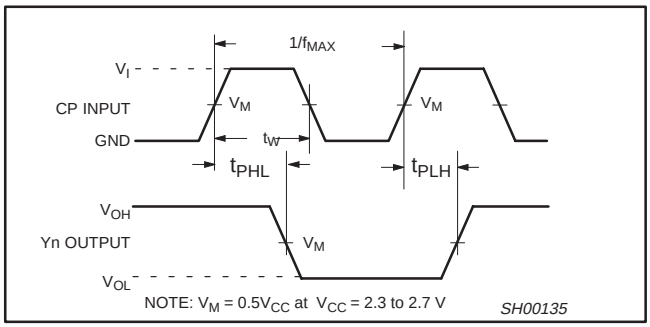

Waveform 4. The clock (CP) to Yn propagation delays, the clock pulse width and the maximum clock frequency.

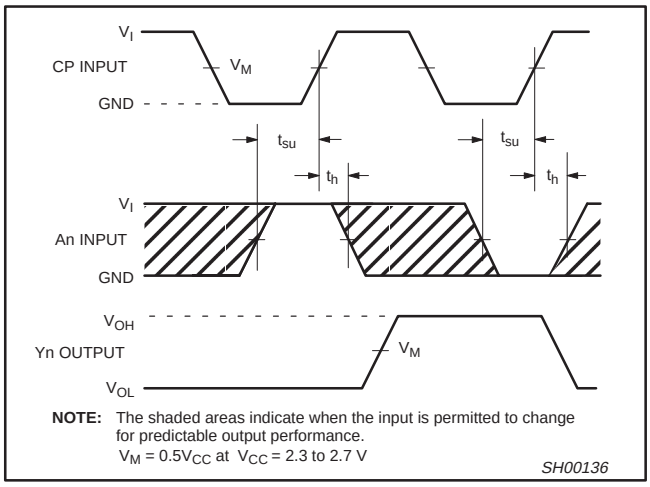

Waveform 5. Data set-up and hold times for the An input to the clock CP input

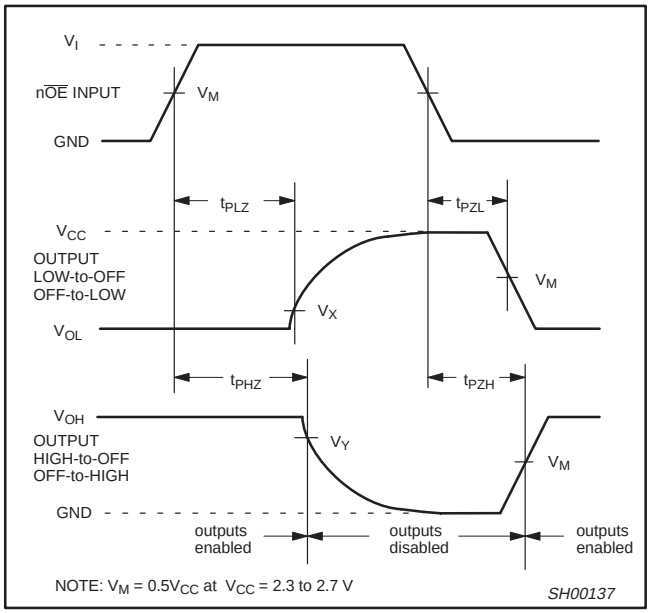

Waveform 6. 3-State enable and disable times

TEST CIRCUIT

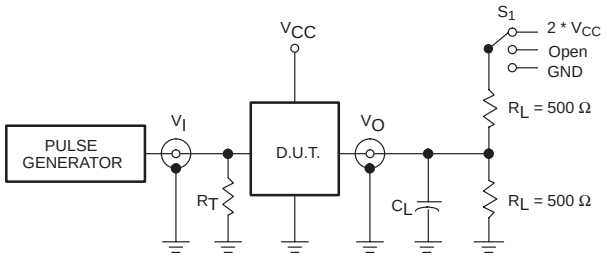

Test Circuit for switching times

DEFINITIONS

R_L = Load resistor

C_L = Load capacitance includes jig and probe capacitance

R_T = Termination resistance should be equal to Z_{OUT} of pulse generators.

SWITCH POSITION

TEST	S_1
t_{PLH}/t_{PHL}	Open
t_{PLZ}/t_{PZL}	2 * V_{CC}
t_{PHZ}/t_{PZH}	GND

V_{CC}	V_I
< 2.7V	V_{CC}
2.7–3.6V	2.7V

SV00906

Waveform 7. Load circuitry for switching times

TSSOP48: plastic thin shrink small outline package; 48 leads; body width 6.1 mm SOT362-1

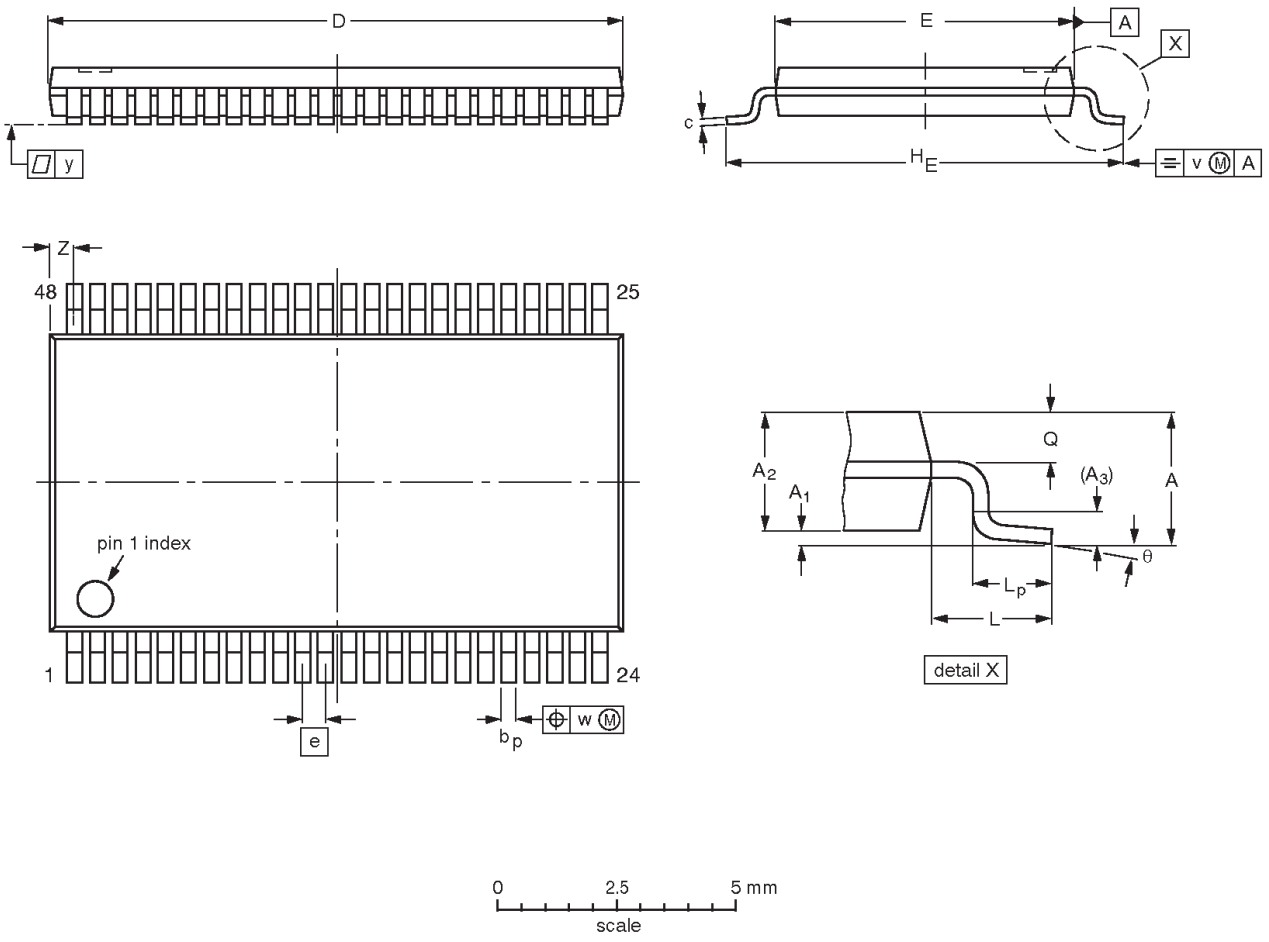

DIMENSIONS (mm are the original dimensions).

UNIT	A max.	A_1	A_2	A_3	b_p	c	$D^{(1)}$	$E^{(2)}$	e	H_E	L	L_p	Q	v	w	y	Z	θ
mm	1.2	0.15 0.05	1.05 0.85	0.25	0.28 0.17	0.2 0.1	12.6 12.4	6.2 6.0	0.5	8.3 7.9	1	0.8 0.4	0.50 0.35	0.25	0.08	0.1	0.8 0.4	8° 0°

Notes

1. Plastic or metal protrusions of 0.15 mm maximum per side are not included.
2. Plastic interlead protrusions of 0.25 mm maximum per side are not included.

OUTLINE VERSION	REFERENCES					EUROPEAN PROJECTION	ISSUE DATE
	IEC	JEDEC	EIAJ				
SOT362-1		MO-153					~~95-02-10~~ 99-12-27

NOTES

Data sheet status

Data sheet status	Product status	Definition [1]
Objective specification	Development	This data sheet contains the design target or goal specifications for product development. Specification may change in any manner without notice.
Preliminary specification	Qualification	This data sheet contains preliminary data, and supplementary data will be published at a later date. Philips Semiconductors reserves the right to make changes at any time without notice in order to improve design and supply the best possible product.
Product specification	Production	This data sheet contains final specifications. Philips Semiconductors reserves the right to make changes at any time without notice in order to improve design and supply the best possible product.

[1] Please consult the most recently issued datasheet before initiating or completing a design.

Definitions

Short-form specification — The data in a short-form specification is extracted from a full data sheet with the same type number and title. For detailed information see the relevant data sheet or data handbook.

Limiting values definition — Limiting values given are in accordance with the Absolute Maximum Rating System (IEC 134). Stress above one or more of the limiting values may cause permanent damage to the device. These are stress ratings only and operation of the device at these or at any other conditions above those given in the Characteristics sections of the specification is not implied. Exposure to limiting values for extended periods may affect device reliability.

Application information — Applications that are described herein for any of these products are for illustrative purposes only. Philips Semiconductors make no representation or warranty that such applications will be suitable for the specified use without further testing or modification.

Disclaimers

Life support — These products are not designed for use in life support appliances, devices or systems where malfunction of these products can reasonably be expected to result in personal injury. Philips Semiconductors customers using or selling these products for use in such applications do so at their own risk and agree to fully indemnify Philips Semiconductors for any damages resulting from such application.

Right to make changes — Philips Semiconductors reserves the right to make changes, without notice, in the products, including circuits, standard cells, and/or software, described or contained herein in order to improve design and/or performance. Philips Semiconductors assumes no responsibility or liability for the use of any of these products, conveys no license or title under any patent, copyright, or mask work right to these products, and makes no representations or warranties that these products are free from patent, copyright, or mask work right infringement, unless otherwise specified.

Philips Semiconductors
811 East Arques Avenue
P.O. Box 3409
Sunnyvale, California 94088–3409
Telephone 800-234-7381

© Copyright Philips Electronics North America Corporation 2000
All rights reserved. Printed in U.S.A.

Date of release: 03-00

Document order number: 9397-750-06962

Let's make things better.

Philips Semiconductors

PHILIPS