74AHC240; 74AHCT240

Octal buffer/line driver; inverting; 3-state

Rev. 2 — 26 November 2010 Product data sheet

1. General description

The 74AHC240 and 74AHCT240 are 8-bit inverting buffer/line drivers with 3-state outputs. These devices can be used as two 4-bit buffers or one 8-bit buffer. They feature two output enables ($1\overline{OE}$ and $2\overline{OE}$), each controlling four of the 3-state outputs. A HIGH on $n\overline{OE}$ causes the outputs to assume a high-impedance OFF-state. Inputs are over voltage tolerant. This feature allows the use of these devices as translators in mixed voltage environments.

2. Features and benefits

- Balanced propagation delays
- All inputs have a Schmitt-trigger action
- Inputs accepts voltages higher than V_{CC}
- For 74AHC240 only: operates with CMOS input levels
- For 74AHCT240 only: operates with TTL input levels
- ESD protection:
  - HBM JESD22-A114F exceeds 2000 V
  - CDM JESD22-C101D exceeds 1000 V
- Multiple package options
- Specified from –40 °C to +85 °C and from –40 °C to +125 °C

3. Ordering information

Table 1. Ordering information

Type number	Package			
	Temperature range	Name	Description	Version
74AHC240D	–40 °C to +125 °C	SO20	plastic small outline package; 20 leads; body width 7.5 mm	SOT163-1
74AHCT240D				
74AHC240PW	–40 °C to +125 °C	TSSOP20	plastic thin shrink small outline package; 20 leads; body width 4.4 mm	SOT360-1
74AHCT240PW				
74AHC240BQ	–40 °C to +125 °C	DHVQFN20	plastic dual in-line compatible thermal enhanced very thin quad flat package; no leads; 20 terminals; body 2.5 × 4.5 × 0.85 mm	SOT764-1
74AHCT240BQ				

4. Functional diagram

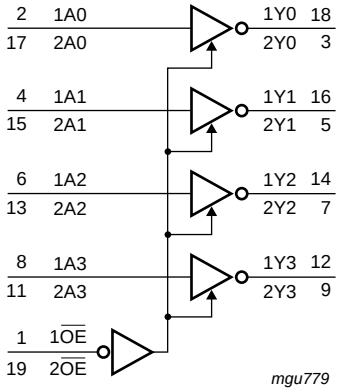

Fig 1. Logic symbol

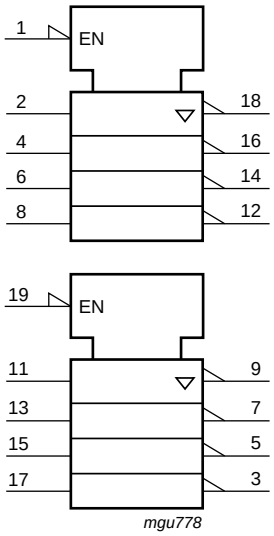

Fig 2. IEC logic symbol

5. Pinning information

5.1 Pinning

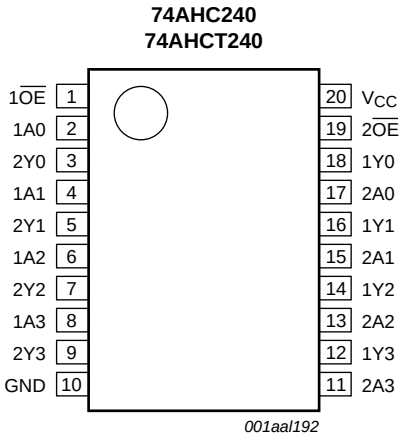

Fig 3. Pin configuration SO20 and TSSOP20

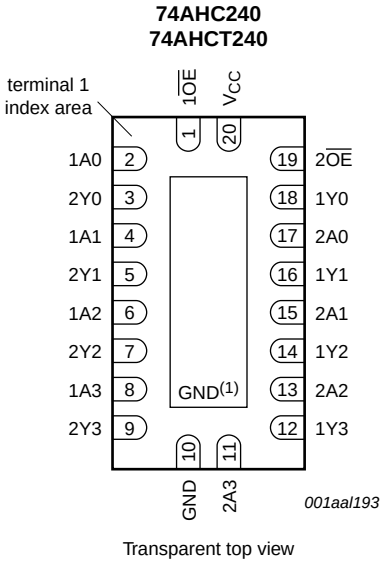

Transparent top view

(1) This is not a supply pin. The substrate is attached to this pad using conductive die attach material. There is no electrical or mechanical requirement to solder this pad. However, if it is soldered, the solder land should remain floating or be connected to GND.

Fig 4. Pin configuration DHVQFN20

All information provided in this document is subject to legal disclaimers.

© NXP B.V. 2010. All rights reserved.

5.2 Pin description

Table 2. Pin description

Symbol	Pin	Description
$1\overline{OE}$	1	output enable input (active LOW)
$2\overline{OE}$	19	output enable input (active LOW)
1A0, 1A1, 1A2, 1A3	2, 4, 6, 8	data input
2A0, 2A1, 2A2, 2A3	17, 15, 13, 11	data input
1Y0, 1Y1, 1Y2, 1Y3	18, 16, 14, 12	data output
2Y0, 2Y1, 2Y2, 2Y3	3, 5, 7, 9	data output
GND	10	ground (0 V)
V_{CC}	20	power supply

6. Functional description

Table 3. Function table[1]

Control	Input	Output
$n\overline{OE}$	nAn	nYn
L	L	H
L	H	L
H	X	Z

[1] H = HIGH voltage level; L = LOW voltage level; X = don't care; Z = high-impedance OFF-state.

7. Limiting values

Table 4. Limiting values

In accordance with the Absolute Maximum Rating System (IEC 60134). Voltages are referenced to GND (ground = 0 V).

Symbol	Parameter	Conditions		Min	Max	Unit
V_{CC}	supply voltage			−0.5	+7.0	V
V_I	input voltage			−0.5	+7.0	V
I_{IK}	input clamping current	$V_I < -0.5$ V	[1]	−20	-	mA
I_{OK}	output clamping current	$V_O < -0.5$ V or $V_O > V_{CC} + 0.5$ V	[1]	-	±20	mA
I_O	output current	$V_O = -0.5$ V to $(V_{CC} + 0.5$ V)		-	±25	mA
I_{CC}	supply current			-	75	mA
I_{GND}	ground current			−75	-	mA
T_{stg}	storage temperature			−65	+150	°C
P_{tot}	total power dissipation	$T_{amb} = -40$ °C to +125 °C	[2]	-	500	mW

[1] The minimum input and output voltage ratings may be exceeded if the input and output current ratings are observed.

[2] For SO20 package: above 70 °C the value of P_{tot} derates linearly with 8.0 mW/K.
For TSSOP20 package: above 60 °C the value of P_{tot} derates linearly with 5.5 mW/K.
For DHVQFN20 package: above 60 °C the value of P_{tot} derates linearly with 4.5 mW/K.

All information provided in this document is subject to legal disclaimers.

© NXP B.V. 2010. All rights reserved.

8. Recommended operating conditions

Table 5. Recommended operating conditions

Symbol	Parameter	Conditions	Min	Typ	Max	Unit
74AHC240						
V_{CC}	supply voltage		2.0	5.0	5.5	V
V_I	input voltage		0	-	5.5	V
V_O	output voltage		0	-	V_{CC}	V
T_{amb}	ambient temperature		−40	+25	+125	°C
$\Delta t/\Delta V$	input transition rise and fall rate	V_{CC} = 3.3 V ± 0.3 V	-	-	100	ns/V
		V_{CC} = 5 V ± 0.5 V	-	-	20	ns/V
74AHCT240						
V_{CC}	supply voltage		4.5	5.0	5.5	V
V_I	input voltage		0	-	5.5	V
V_O	output voltage		0	-	V_{CC}	V
T_{amb}	ambient temperature		−40	+25	+125	°C
$\Delta t/\Delta V$	input transition rise and fall rate	V_{CC} = 5 V ± 0.5 V	-	-	20	ns/V

9. Static characteristics

Table 6. Static characteristics

At recommended operating conditions; voltages are referenced to GND (ground = 0 V).

Symbol	Parameter	Conditions	25 °C			−40 °C to +85 °C		−40 °C to +125 °C		Unit
			Min	Typ	Max	Min	Max	Min	Max	
74AHC240										
V_{IH}	HIGH-level input voltage	V_{CC} = 2.0 V	1.5	-	-	1.5	-	1.5	-	V
		V_{CC} = 3.0 V	2.1	-	-	2.1	-	2.1	-	V
		V_{CC} = 5.5 V	3.85	-	-	3.85	-	3.85	-	V
V_{IL}	LOW-level input voltage	V_{CC} = 2.0 V	-	-	0.5	-	0.5	-	0.5	V
		V_{CC} = 3.0 V	-	-	0.9	-	0.9	-	0.9	V
		V_{CC} = 5.5 V	-	-	1.65	-	1.65	-	1.65	V
V_{OH}	HIGH-level output voltage	V_I = V_{IH} or V_{IL}								
		I_O = −50 μA; V_{CC} = 2.0 V	1.9	2.0	-	1.9	-	1.9	-	V
		I_O = −50 μA; V_{CC} = 3.0 V	2.9	3.0	-	2.9	-	2.9	-	V
		I_O = −50 μA; V_{CC} = 4.5 V	4.4	4.5	-	4.4	-	4.4	-	V
		I_O = −4.0 mA; V_{CC} = 3.0 V	2.58	-	-	2.48	-	2.40	-	V
		I_O = −8.0 mA; V_{CC} = 4.5 V	3.94	-	-	3.80	-	3.70	-	V
V_{OL}	LOW-level output voltage	V_I = V_{IH} or V_{IL}								
		I_O = 50 μA; V_{CC} = 2.0 V	-	0	0.1	-	0.1	-	0.1	V
		I_O = 50 μA; V_{CC} = 3.0 V	-	0	0.1	-	0.1	-	0.1	V
		I_O = 50 μA; V_{CC} = 4.5 V	-	0	0.1	-	0.1	-	0.1	V
		I_O = 4.0 mA; V_{CC} = 3.0 V	-	-	0.36	-	0.44	-	0.55	V
		I_O = 8.0 mA; V_{CC} = 4.5 V	-	-	0.36	-	0.44	-	0.55	V

All information provided in this document is subject to legal disclaimers.

© NXP B.V. 2010. All rights reserved.

Table 6. Static characteristics *...continued*

At recommended operating conditions; voltages are referenced to GND (ground = 0 V).

Symbol	Parameter	Conditions	25 °C			–40 °C to +85 °C		–40 °C to +125 °C		Unit
			Min	Typ	Max	Min	Max	Min	Max	
I_I	input leakage current	V_I = 5.5 V or GND; V_{CC} = 0 V to 5.5 V	-	-	0.1	-	1.0	-	2.0	μA
I_{OZ}	OFF-state output current	$V_I = V_{IH}$ or V_{IL}; $V_O = V_{CC}$ or GND; V_{CC} = 5.5 V	-	-	±0.25	-	±2.5	-	±10.0	μA
I_{CC}	supply current	$V_I = V_{CC}$ or GND; I_O = 0 A; V_{CC} = 5.5 V	-	-	4.0	-	40	-	80	μA
C_I	input capacitance	$V_I = V_{CC}$ or GND	-	3	10	-	10	-	10	pF
C_O	output capacitance		-	4	-	-	-	-	-	pF
74AHCT240										
V_{IH}	HIGH-level input voltage	V_{CC} = 4.5 V to 5.5 V	2.0	-	-	2.0	-	2.0	-	V
V_{IL}	LOW-level input voltage	V_{CC} = 4.5 V to 5.5 V	-	-	0.8	-	0.8	-	0.8	V
V_{OH}	HIGH-level output voltage	$V_I = V_{IH}$ or V_{IL}; V_{CC} = 4.5 V								
		I_O = –50 μA	4.4	4.5	-	4.4	-	4.4	-	V
		I_O = –8.0 mA	3.94	-	-	3.80	-	3.70	-	V
V_{OL}	LOW-level output voltage	$V_I = V_{IH}$ or V_{IL}; V_{CC} = 4.5 V								
		I_O = 50 μA	-	0	0.1	-	0.1	-	0.1	V
		I_O = 8.0 mA	-	-	0.36	-	0.44	-	0.55	V
I_I	input leakage current	V_I = 5.5 V or GND; V_{CC} = 0 V to 5.5 V	-	-	0.1	-	1.0	-	2.0	μA
I_{OZ}	OFF-state output current	$V_I = V_{IH}$ or V_{IL}; $V_O = V_{CC}$ or GND per input pin; other inputs at V_{CC} or GND; I_O = 0 A; V_{CC} = 5.5 V	-	-	±0.25	-	±2.5	-	±10.0	μA
I_{CC}	supply current	$V_I = V_{CC}$ or GND; I_O = 0 A; V_{CC} = 5.5 V	-	-	4.0	-	40	-	80	μA
ΔI_{CC}	additional supply current	per input pin; $V_I = V_{CC}$ – 2.1 V; other pins at V_{CC} or GND; I_O = 0 A; V_{CC} = 4.5 V to 5.5 V	-	-	1.35	-	1.5	-	1.5	mA
C_I	input capacitance	$V_I = V_{CC}$ or GND	-	3	10	-	10	-	10	pF
C_O	output capacitance		-	4	-	-	-	-	-	pF

All information provided in this document is subject to legal disclaimers.

© NXP B.V. 2010. All rights reserved.

10. Dynamic characteristics

Table 7. Dynamic characteristics

Voltages are referenced to GND (ground = 0 V); for test circuit see Figure 7.

Symbol	Parameter	Conditions		25 °C			−40 °C to +125 °C			Unit
				Min	Typ[1]	Max	Min	Max (85 °C)	Max (125 °C)	
74AHC240										
t_{pd}	propagation delay	nAn to nYn; see Figure 5	[2]							
		V_{CC} = 3.0 V to 3.6 V; C_L = 15 pF		-	3.9	7.5	1.0	8.6	10.8	ns
		V_{CC} = 3.0 V to 3.6 V; C_L = 50 pF		-	5.8	11.0	1.0	12.5	15.6	ns
		V_{CC} = 4.5 V to 5.5 V; C_L = 15 pF		-	2.8	4.8	1.0	5.7	7.1	ns
		V_{CC} = 4.5 V to 5.5 V; C_L = 50 pF		-	4.2	7.3	1.0	8.5	10.6	ns
t_{en}	enable time	$n\overline{OE}$ to nYn; see Figure 6	[2]							
		V_{CC} = 3.0 V to 3.6 V; C_L = 15 pF		-	4.4	10.0	1.0	12.0	19.4	ns
		V_{CC} = 3.0 V to 3.6 V; C_L = 50 pF		-	5.8	13.5	1.0	15.5	19.4	ns
		V_{CC} = 4.5 V to 5.5 V; C_L = 15 pF		-	3.1	6.5	1.0	7.7	12.5	ns
		V_{CC} = 4.5 V to 5.5 V; C_L = 50 pF		-	4.1	8.5	1.0	10.0	12.5	ns
t_{dis}	disable time	$n\overline{OE}$ to nYn; see Figure 6	[2]							
		V_{CC} = 3.0 V to 3.6 V; C_L = 15 pF		-	5.3	9.0	1.0	10.0	18.1	ns
		V_{CC} = 3.0 V to 3.6 V; C_L = 50 pF		-	8.9	13.0	1.0	14.5	18.1	ns
		V_{CC} = 4.5 V to 5.5 V; C_L = 15 pF		-	3.9	5.8	1.0	6.5	8.1	ns
		V_{CC} = 4.5 V to 5.5 V; C_L = 50 pF		-	6.2	8.7	1.0	9.5	11.8	ns
C_{PD}	power dissipation capacitance	V_I = GND to V_{CC}; C_L = 50 pF; f_i = 1 MHz	[3]	-	9	-	-	-	-	pF

All information provided in this document is subject to legal disclaimers.

© NXP B.V. 2010. All rights reserved.

Table 7. Dynamic characteristics *...continued*

Voltages are referenced to GND (ground = 0 V); for test circuit see Figure 7.

Symbol	Parameter	Conditions		25 °C			−40 °C to +125 °C			Unit
				Min	Typ[1]	Max	Min	Max (85 °C)	Max (125 °C)	
74AHCT240										
t_{pd}	propagation delay	nAn to nYn; see Figure 5	[2]							
		V_{CC} = 4.5 V to 5.5 V; C_L = 15 pF		-	3.0	5.8	1.0	6.8	8.5	ns
		V_{CC} = 4.5 V to 5.5 V; C_L = 50 pF		-	4.4	8.4	1.0	9.5	11.9	ns
t_{en}	enable time	$n\overline{OE}$ to nYn; see Figure 6	[2]							
		V_{CC} = 4.5 V to 5.5 V; C_L = 15 pF		-	3.4	7.5	1.0	9.0	14.4	ns
		V_{CC} = 4.5 V to 5.5 V; C_L = 50 pF		-	4.5	9.5	1.0	11.5	14.4	ns
t_{dis}	disable time	$n\overline{OE}$ to nYn; see Figure 6	[2]							
		V_{CC} = 4.5 V to 5.5 V; C_L = 15 pF		-	3.9	6.1	1.0	6.7	8.3	ns
		V_{CC} = 4.5 V to 5.5 V; C_L = 50 pF		-	6.2	8.7	1.0	9.2	11.5	ns
C_{PD}	power dissipation capacitance	V_I = GND to V_{CC}; C_L = 50 pF; f_i = 1 MHz	[3]	-	9	-	-	-	-	pF

[1] Typical values are measured at nominal supply voltage (V_{CC} = 3.3 V and V_{CC} = 5.0 V).

[2] t_{pd} is the same as t_{PLH} and t_{PHL}; t_{en} is the same as t_{PZH} and t_{PZL}; t_{dis} is the same as t_{PLZ} and t_{PHZ}.

[3] C_{PD} is used to determine the dynamic power dissipation (P_D in μW).
$P_D = C_{PD} \times V_{CC}^2 \times f_i \times N + \Sigma(C_L \times V_{CC}^2 \times f_o)$ where:
f_i = input frequency in MHz;
f_o = output frequency in MHz;
C_L = output load capacitance in pF;
V_{CC} = supply voltage in V;
N = number of inputs switching;
$\Sigma(C_L \times V_{CC}^2 \times f_o)$ = sum of outputs.

11. Waveforms

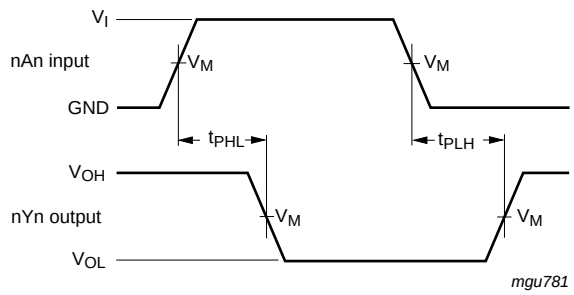

Measurement points are given in Table 8.

V_{OL} and V_{OH} are typical voltage output drop that occur with the output load.

Fig 5. Propagation delay input (nAn) to output (nYn)

All information provided in this document is subject to legal disclaimers.

© NXP B.V. 2010. All rights reserved.

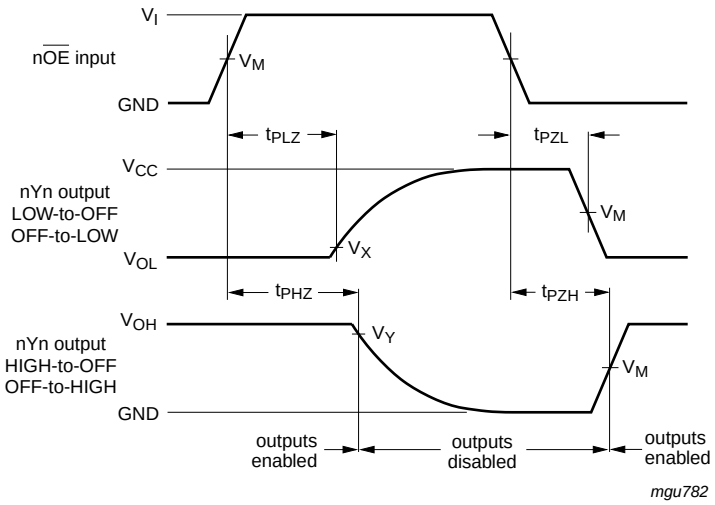

Measurement points are given in Table 8.

V_{OL} and V_{OH} are typical voltage output drop that occur with the output load.

Fig 6. Enable and disable times

Table 8. Measurement points

Type	Input	Output		
	V_M	V_M	V_X	V_Y
74AHC240	$0.5V_{CC}$	$0.5V_{CC}$	V_{OL} + 0.3 V	V_{OH} − 0.3 V
74AHCT240	1.5 V	$0.5V_{CC}$	V_{OL} + 0.3 V	V_{OH} − 0.3 V

All information provided in this document is subject to legal disclaimers.

© NXP B.V. 2010. All rights reserved.

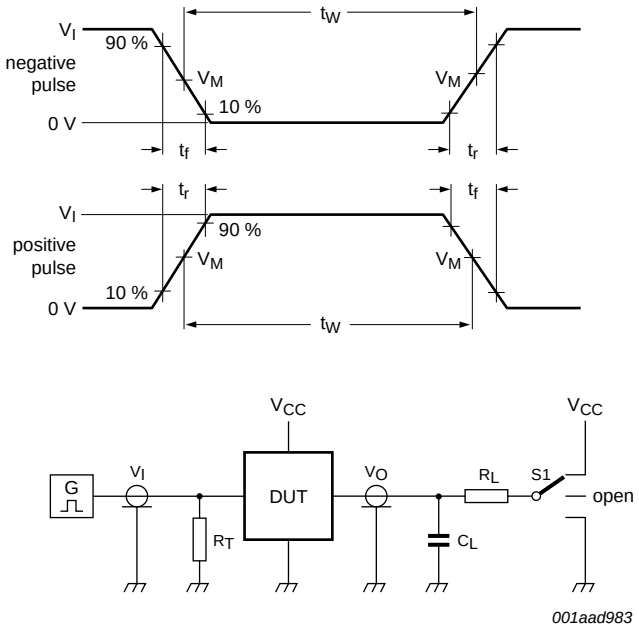

Test data is given in Table 9.

Definitions test circuit:

R_T = Termination resistance should be equal to output impedance Z_o of the pulse generator.

C_L = Load capacitance including jig and probe capacitance.

R_L = Load resistance.

S1 = Test selection switch.

Fig 7. Load circuitry for switching times

Table 9. Test data

Type	Input		Load		S1 position		
	V_I	t_r, t_f	C_L	R_L	t_{PHL}, t_{PLH}	t_{PZH}, t_{PHZ}	t_{PZL}, t_{PLZ}
74AHC240	V_{CC}	3.0 ns	15 pF, 50 pF	1 kΩ	open	GND	V_{CC}
74AHCT240	3.0 V	3.0 ns	15 pF, 50 pF	1 kΩ	open	GND	V_{CC}

All information provided in this document is subject to legal disclaimers.

© NXP B.V. 2010. All rights reserved.

12. Package outline

SO20: plastic small outline package; 20 leads; body width 7.5 mm **SOT163-1**

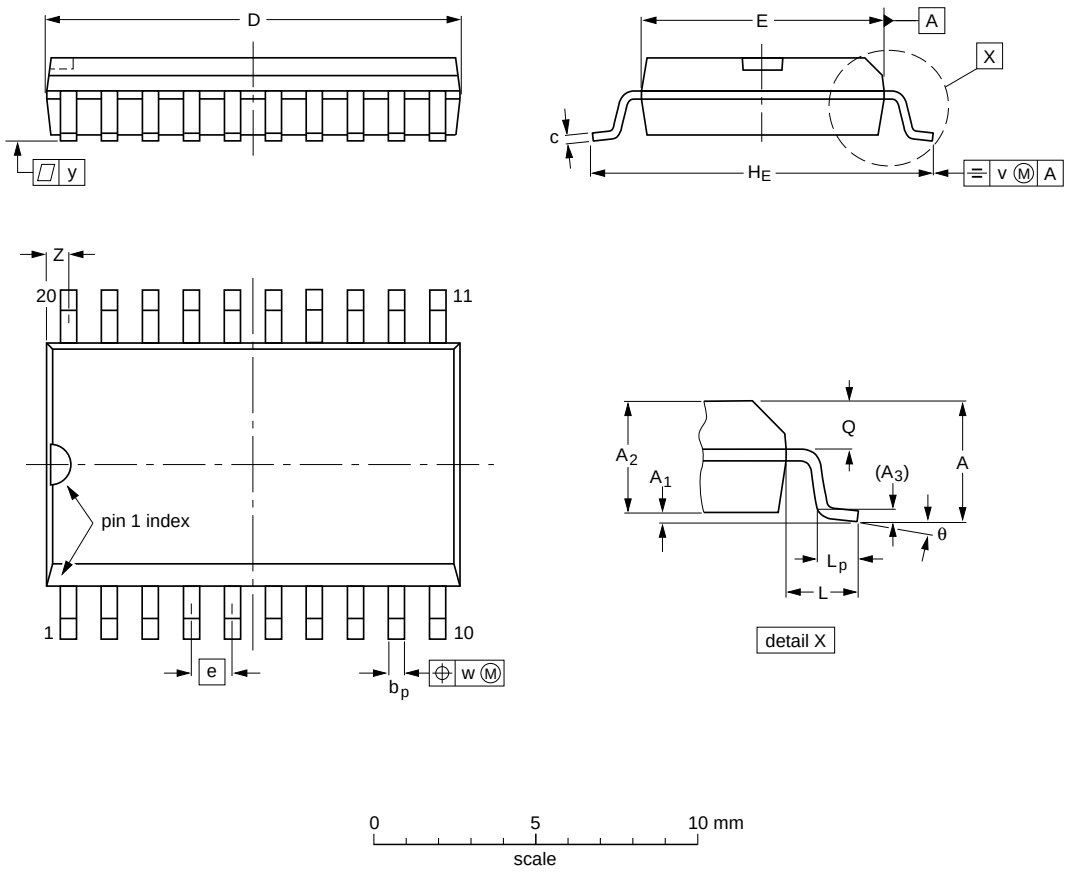

DIMENSIONS (inch dimensions are derived from the original mm dimensions)

UNIT	A max.	A_1	A_2	A_3	b_p	c	D (1)	E (1)	e	H_E	L	L_p	Q	v	w	y	Z (1)	θ
mm	2.65	0.3 0.1	2.45 2.25	0.25	0.49 0.36	0.32 0.23	13.0 12.6	7.6 7.4	1.27	10.65 10.00	1.4	1.1 0.4	1.1 1.0	0.25	0.25	0.1	0.9 0.4	8° 0°
inches	0.1	0.012 0.004	0.096 0.089	0.01	0.019 0.014	0.013 0.009	0.51 0.49	0.30 0.29	0.05	0.419 0.394	0.055	0.043 0.016	0.043 0.039	0.01	0.01	0.004	0.035 0.016	

Note

1. Plastic or metal protrusions of 0.15 mm (0.006 inch) maximum per side are not included.

OUTLINE VERSION	REFERENCES				EUROPEAN PROJECTION	ISSUE DATE
	IEC	JEDEC	JEITA			
SOT163-1	075E04	MS-013				~~99-12-27~~ 03-02-19

Fig 8. Package outline SOT163-1 (SO20)

All information provided in this document is subject to legal disclaimers.

© NXP B.V. 2010. All rights reserved.

TSSOP20: plastic thin shrink small outline package; 20 leads; body width 4.4 mm **SOT360-1**

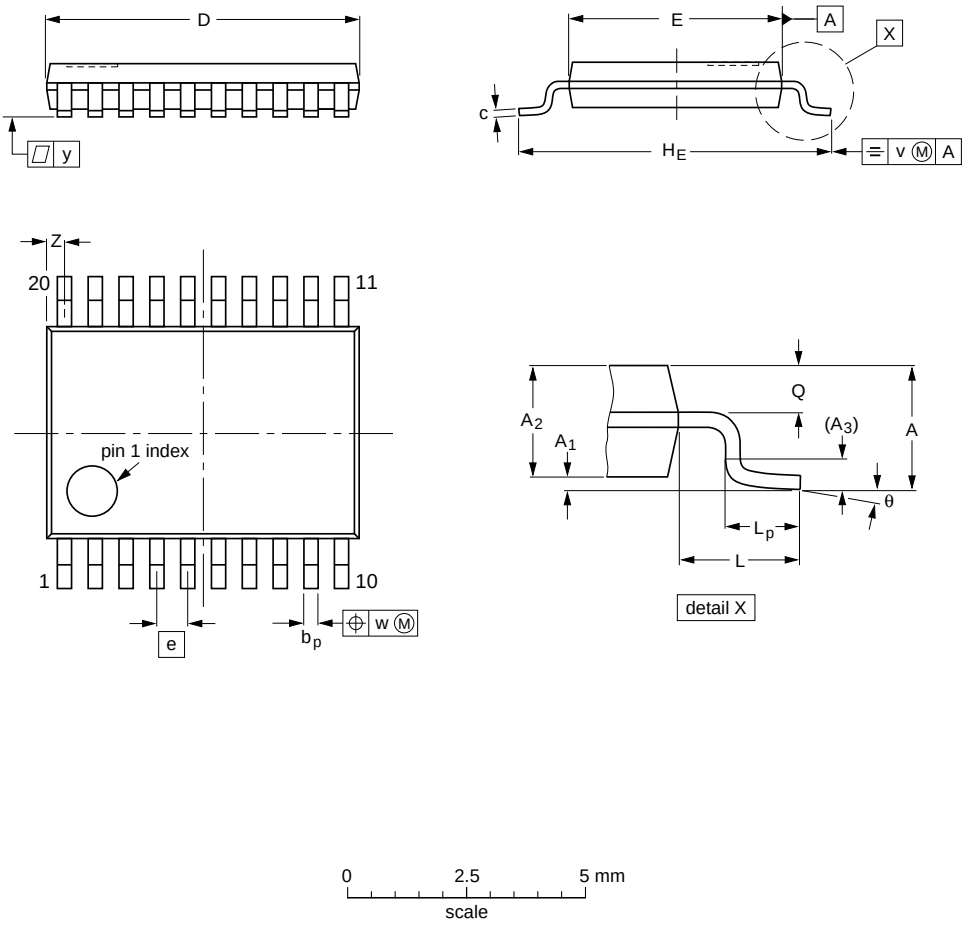

DIMENSIONS (mm are the original dimensions)

UNIT	A max.	A_1	A_2	A_3	b_p	c	D (1)	E (2)	e	H_E	L	L_p	Q	v	w	y	Z (1)	θ
mm	1.1	0.15 0.05	0.95 0.80	0.25	0.30 0.19	0.2 0.1	6.6 6.4	4.5 4.3	0.65	6.6 6.2	1	0.75 0.50	0.4 0.3	0.2	0.13	0.1	0.5 0.2	8° 0°

Notes

1. Plastic or metal protrusions of 0.15 mm maximum per side are not included.
2. Plastic interlead protrusions of 0.25 mm maximum per side are not included.

OUTLINE VERSION	REFERENCES				EUROPEAN PROJECTION	ISSUE DATE
	IEC	JEDEC	JEITA			
SOT360-1		MO-153				~~99-12-27~~ 03-02-19

Fig 9. Package outline SOT360-1 (TSSOP20)

All information provided in this document is subject to legal disclaimers.

© NXP B.V. 2010. All rights reserved.

DHVQFN20: plastic dual in-line compatible thermal enhanced very thin quad flat package; no leads; 20 terminals; body 2.5 x 4.5 x 0.85 mm **SOT764-1**

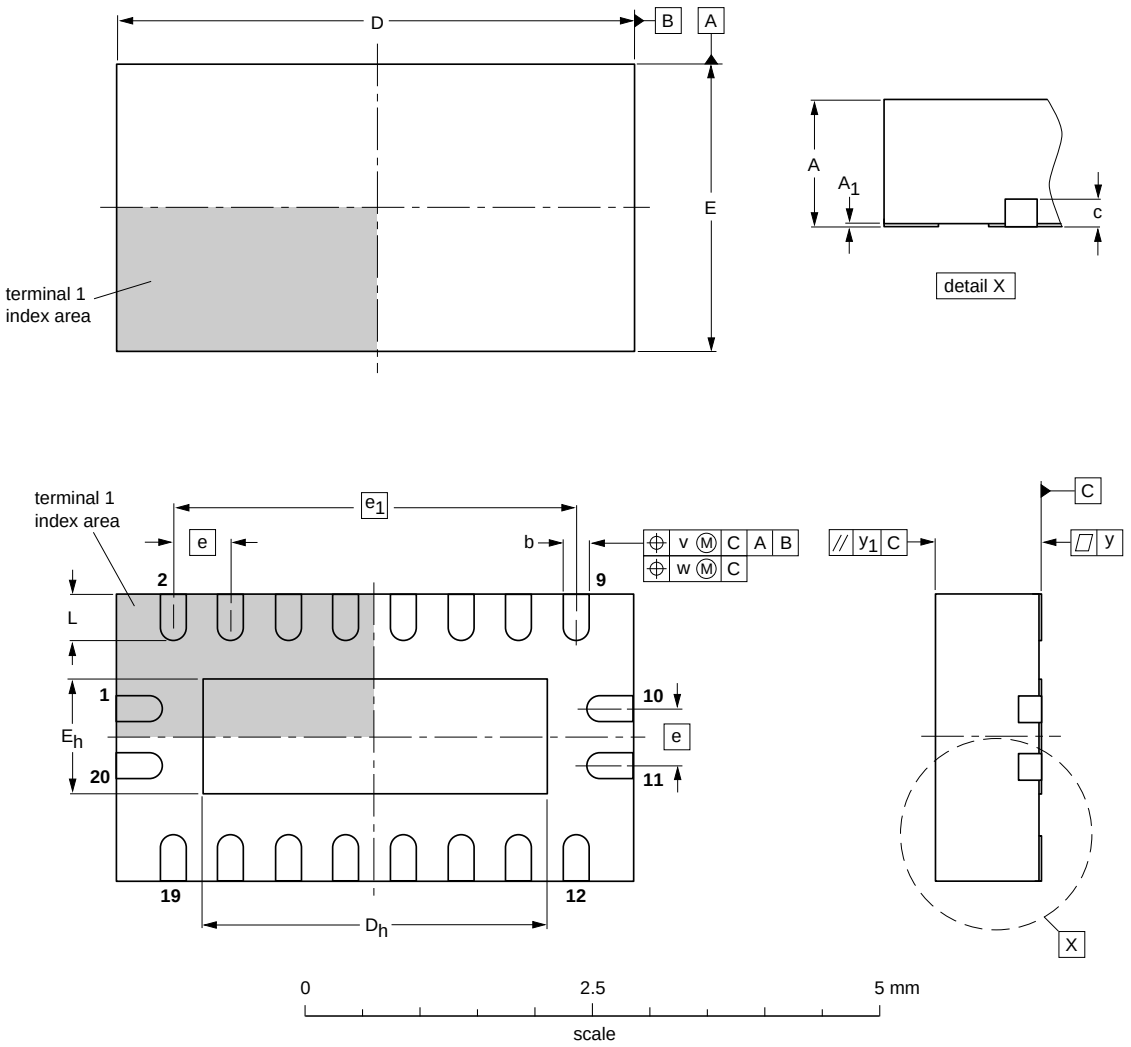

DIMENSIONS (mm are the original dimensions)

UNIT	A(1) max.	A_1	b	c	D(1)	D_h	E(1)	E_h	e	e_1	L	v	w	y	y_1
mm	1	0.05 0.00	0.30 0.18	0.2	4.6 4.4	3.15 2.85	2.6 2.4	1.15 0.85	0.5	3.5	0.5 0.3	0.1	0.05	0.05	0.1

Note

1. Plastic or metal protrusions of 0.075 mm maximum per side are not included.

OUTLINE VERSION	REFERENCES				EUROPEAN PROJECTION	ISSUE DATE
	IEC	JEDEC	JEITA			
SOT764-1	- - -	MO-241	- - -			~~02-10-17~~ 03-01-27

Fig 10. Package outline SOT764-1 (DHVQFN20)

All information provided in this document is subject to legal disclaimers.

© NXP B.V. 2010. All rights reserved.

13. Abbreviations

Table 10. Abbreviations

Acronym	Description
CDM	Charge Device Model
CMOS	Complementary Metal Oxide Semiconductor
DUT	Device Under Test
ESD	ElectroStatic Discharge
HBM	Human Body Model
TTL	Transistor-Transistor Logic

14. Revision history

Table 11. Revision history

Document ID	Release date	Data sheet status	Change notice	Supersedes
74AHC_AHCT240 v.2	20101126	Product data sheet	-	74AHC_AHCT240 v.1
Modifications:	• Figure note [1] of Figure 4: changed.			
74AHC_AHCT240 v.1	20100111	Product data sheet	-	-

All information provided in this document is subject to legal disclaimers.

© NXP B.V. 2010. All rights reserved.

15. Legal information

15.1 Data sheet status

Document status[1][2]	Product status[3]	Definition
Objective [short] data sheet	Development	This document contains data from the objective specification for product development.
Preliminary [short] data sheet	Qualification	This document contains data from the preliminary specification.
Product [short] data sheet	Production	This document contains the product specification.

[1] Please consult the most recently issued document before initiating or completing a design.

[2] The term 'short data sheet' is explained in section "Definitions".

[3] The product status of device(s) described in this document may have changed since this document was published and may differ in case of multiple devices. The latest product status information is available on the Internet at URL http://www.nxp.com.

15.2 Definitions

Draft — The document is a draft version only. The content is still under internal review and subject to formal approval, which may result in modifications or additions. NXP Semiconductors does not give any representations or warranties as to the accuracy or completeness of information included herein and shall have no liability for the consequences of use of such information.

Short data sheet — A short data sheet is an extract from a full data sheet with the same product type number(s) and title. A short data sheet is intended for quick reference only and should not be relied upon to contain detailed and full information. For detailed and full information see the relevant full data sheet, which is available on request via the local NXP Semiconductors sales office. In case of any inconsistency or conflict with the short data sheet, the full data sheet shall prevail.

Product specification — The information and data provided in a Product data sheet shall define the specification of the product as agreed between NXP Semiconductors and its customer, unless NXP Semiconductors and customer have explicitly agreed otherwise in writing. In no event however, shall an agreement be valid in which the NXP Semiconductors product is deemed to offer functions and qualities beyond those described in the Product data sheet.

15.3 Disclaimers

Limited warranty and liability — Information in this document is believed to be accurate and reliable. However, NXP Semiconductors does not give any representations or warranties, expressed or implied, as to the accuracy or completeness of such information and shall have no liability for the consequences of use of such information.

In no event shall NXP Semiconductors be liable for any indirect, incidental, punitive, special or consequential damages (including - without limitation - lost profits, lost savings, business interruption, costs related to the removal or replacement of any products or rework charges) whether or not such damages are based on tort (including negligence), warranty, breach of contract or any other legal theory.

Notwithstanding any damages that customer might incur for any reason whatsoever, NXP Semiconductors' aggregate and cumulative liability towards customer for the products described herein shall be limited in accordance with the *Terms and conditions of commercial sale* of NXP Semiconductors.

Right to make changes — NXP Semiconductors reserves the right to make changes to information published in this document, including without limitation specifications and product descriptions, at any time and without notice. This document supersedes and replaces all information supplied prior to the publication hereof.

Suitability for use in automotive applications — This NXP Semiconductors product has been qualified for use in automotive applications. The product is not designed, authorized or warranted to be suitable for use in medical, military, aircraft, space or life support equipment, nor in applications where failure or malfunction of an NXP Semiconductors product can reasonably be expected to result in personal injury, death or severe property or environmental damage. NXP Semiconductors accepts no liability for inclusion and/or use of NXP Semiconductors products in such equipment or applications and therefore such inclusion and/or use is at the customer's own risk.

Applications — Applications that are described herein for any of these products are for illustrative purposes only. NXP Semiconductors makes no representation or warranty that such applications will be suitable for the specified use without further testing or modification.

Customers are responsible for the design and operation of their applications and products using NXP Semiconductors products, and NXP Semiconductors accepts no liability for any assistance with applications or customer product design. It is customer's sole responsibility to determine whether the NXP Semiconductors product is suitable and fit for the customer's applications and products planned, as well as for the planned application and use of customer's third party customer(s). Customers should provide appropriate design and operating safeguards to minimize the risks associated with their applications and products.

NXP Semiconductors does not accept any liability related to any default, damage, costs or problem which is based on any weakness or default in the customer's applications or products, or the application or use by customer's third party customer(s). Customer is responsible for doing all necessary testing for the customer's applications and products using NXP Semiconductors products in order to avoid a default of the applications and the products or of the application or use by customer's third party customer(s). NXP does not accept any liability in this respect.

Limiting values — Stress above one or more limiting values (as defined in the Absolute Maximum Ratings System of IEC 60134) will cause permanent damage to the device. Limiting values are stress ratings only and (proper) operation of the device at these or any other conditions above those given in the Recommended operating conditions section (if present) or the Characteristics sections of this document is not warranted. Constant or repeated exposure to limiting values will permanently and irreversibly affect the quality and reliability of the device.

Terms and conditions of commercial sale — NXP Semiconductors products are sold subject to the general terms and conditions of commercial sale, as published at http://www.nxp.com/profile/terms, unless otherwise agreed in a valid written individual agreement. In case an individual agreement is concluded only the terms and conditions of the respective agreement shall apply. NXP Semiconductors hereby expressly objects to applying the customer's general terms and conditions with regard to the purchase of NXP Semiconductors products by customer.

No offer to sell or license — Nothing in this document may be interpreted or construed as an offer to sell products that is open for acceptance or the grant, conveyance or implication of any license under any copyrights, patents or other industrial or intellectual property rights.

All information provided in this document is subject to legal disclaimers.

© NXP B.V. 2010. All rights reserved.

Export control — This document as well as the item(s) described herein may be subject to export control regulations. Export might require a prior authorization from national authorities.

15.4 Trademarks

Notice: All referenced brands, product names, service names and trademarks are the property of their respective owners.

16. Contact information

For more information, please visit: **http://www.nxp.com**

For sales office addresses, please send an email to: **salesaddresses@nxp.com**

All information provided in this document is subject to legal disclaimers.

© NXP B.V. 2010. All rights reserved.

17. Contents

1	**General description**	**1**
2	**Features and benefits**	**1**
3	**Ordering information**	**1**
4	**Functional diagram**	**2**
5	**Pinning information**	**2**
5.1	Pinning	2
5.2	Pin description	3
6	**Functional description**	**3**
7	**Limiting values**	**3**
8	**Recommended operating conditions**	**4**
9	**Static characteristics**	**4**
10	**Dynamic characteristics**	**6**
11	**Waveforms**	**7**
12	**Package outline**	**10**
13	**Abbreviations**	**13**
14	**Revision history**	**13**
15	**Legal information**	**14**
15.1	Data sheet status	14
15.2	Definitions	14
15.3	Disclaimers	14
15.4	Trademarks	15
16	**Contact information**	**15**
17	**Contents**	**16**

Please be aware that important notices concerning this document and the product(s) described herein, have been included in section 'Legal information'.

© NXP B.V. 2010. **All rights reserved.**

For more information, please visit: http://www.nxp.com
For sales office addresses, please send an email to: salesaddresses@nxp.com

Date of release: 26 November 2010
Document identifier: 74AHC_AHCT240