74ACT11810
QUADRUPLE 2-INPUT EXCLUSIVE-NOR GATE

SCAS211 − MARCH 1990 − REVISED APRIL 1993

- **Inputs Are TTL-Voltage Compatible**
- **Flow-Through Architecture to Optimize PCB Layout**
- **Center-Pin V_{CC} and GND Configurations to Minimize High-Speed Switching Noise**
- **EPIC™ (Enhanced-Performance Implanted CMOS) 1-μm Process**
- **500-mA Typical Latch-Up Immunity at 125°C**
- **Package Options Include Plastic Small-Outline Packages and Standard Plastic 300-mil DIPs**

D OR N PACKAGE
(TOP VIEW)

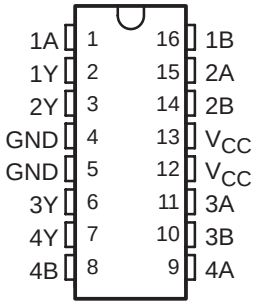

description

This device contains four independent Exclusive-NOR gates. They perform the Boolean functions $Y = \overline{A \oplus B} = (A + \overline{B}) \bullet (\overline{A} + B)$ in positive logic.

A common application is a true/complement element. If one of the inputs is high, the other input will be reproduced in true form at the output. If one of the inputs is low, the signal on the other input will be reproduced inverted at the output.

The 74ACT11810 is characterized for operation from − 40°C to 85°C.

FUNCTION TABLE

INPUTS		OUTPUT
A	B	Y
L	L	H
L	H	L
H	L	L
H	H	H

EPIC is a trademark of Texas Instruments Incorporated.

PRODUCTION DATA information is current as of publication date. Products conform to specifications per the terms of Texas Instruments standard warranty. Production processing does not necessarily include testing of all parameters.

Copyright © 1993, Texas Instruments Incorporated

TEXAS INSTRUMENTS
POST OFFICE BOX 655303 • DALLAS, TEXAS 75265
POST OFFICE BOX 1443 • HOUSTON, TEXAS 77251−1443

logic symbol†

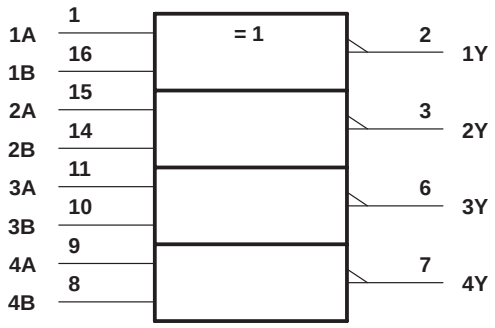

† This symbol is in accordance with ANSI/IEEE Std 91-1984 andIEC Publication 617-12.

logic diagram (positive logic)

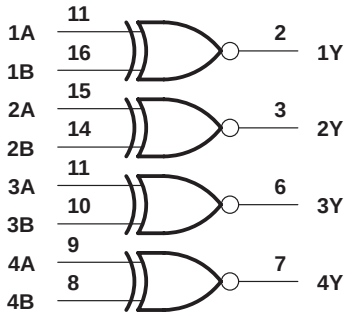

absolute maximum ratings over operating free-air temperature range (unless otherwise noted)‡

Supply voltage range, V_{CC} . . . . . −0.5 V to 7 V
Input voltage range, V_I (see Note 1) . . . . . −0.5 V to V_{CC} + 0.5 V
Output voltage range, V_O (see Note 1) . . . . . −0.5 V to V_{CC} + 0.5 V
Input clamp current, I_{IK} (V_I < 0 or V_I > V_{CC}) . . . . . ± 20 mA
Output clamp current, I_{OK} (V_O < 0 or V_O > V_{CC}) . . . . . ± 50 mA
Continuous output current, I_O (V_O = 0 to V_{CC}) . . . . . ± 50 mA
Continuous current through V_{CC} or GND . . . . . ± 100 mA
Storage temperature range . . . . . −65°C to 150°C

‡ Stresses beyond those listed under “absolute maximum ratings” may cause permanent damage to the device. These are stress ratings only and functional operation of the device at these or any other conditions beyond those indicated under “recommended operating conditions” is not implied. Exposure to absolute-maximum-rated conditions for extended periods may affect device reliability.

NOTE 1: The input and output voltage ratings may be exceeded if the input and output current ratings are observed.

recommended operating conditions

		MIN	MAX	UNIT
V_{CC}	Supply voltage	4.5	5.5	V
V_{IH}	High-level input voltage	2		V
V_{IL}	Low-level input voltage		0.8	V
V_I	Input voltage	0	V_{CC}	V
V_O	Output voltage	0	V_{CC}	V
I_{OH}	High-level output current		−24	mA
I_{OL}	Low-level output current		24	mA
$\Delta t/\Delta v$	Input transition rise or fall rate	0	10	ns/V
T_A	Operating free-air temperature	− 40	85	°C

electrical characteristics over recommended operating free-air temperature range (unless otherwise noted)

PARAMETER	TEST CONDITIONS	V_{CC}	T_A = 25°C			MIN	MAX	UNIT
			MIN	TYP	MAX			
V_{OH}	I_{OH} = − 50 μA	4.5 V	4.4			4.4		V
		5.5 V	5.4			5.4		
	I_{OH} = − 24 mA	4.5 V	3.94			3.8		
		5.5 V	4.94			4.8		
	I_{OH} = − 75 mA†	5.5 V				3.85		
V_{OL}	I_{OL} = 50 μA	4.5 V			0.1		0.1	V
		5.5 V			0.1		0.1	
	I_{OL} = 24 mA	4.5 V			0.36		0.44	
		5.5 V			0.36		0.44	
	I_{OL} = 75 mA†	5.5 V					1.65	
I_I	$V_I = V_{CC}$ or GND	5.5 V			± 0.1		±1	μA
I_{CC}	$V_I = V_{CC}$ or GND, I_O = 0	5.5 V			4		4	μA
ΔI_{CC}‡	One input at 3.4 V, Other inputs at GND or V_{CC}	5.5 V			0.9		1	mA
C_i	$V_I = V_{CC}$ or GND	5 V		3.5				pF

† Not more than one output should be tested at a time, and the duration of the test should not exceed 10 ms.
‡ This is the increase in supply current for each input that is at one of the specified TTL voltage levels rather than 0 V or V_{CC}.

switching characteristics over recommended ranges of supply voltage and operating free-air temperature (unless otherwise noted) (see Figure 1)

PARAMETER	FROM (INPUT)	TO (OUTPUT)	T_A = 25°C			MIN	MAX	UNIT
			MIN	TYP	MAX			
t_{PLH}	A or B (other input low)	Y	1.9	4.8	7.2	1.9	8.3	ns
t_{PHL}			1.9	4.9	7.1	1.9	8.3	
t_{PLH}	A or B (other input high)	Y	1.9	4.8	7.2	1.9	8.3	ns
t_{PHL}			1.9	4.9	7.1	1.9	8.3	

operating characteristics, V_{CC} = 5 V, T_A = 25°C

PARAMETER		TEST CONDITIONS	TYP	UNIT
C_{pd}	Power dissipation capacitance	C_L = 50 pF, f = 1 MHz	26	pF

PARAMETER MEASUREMENT INFORMATION

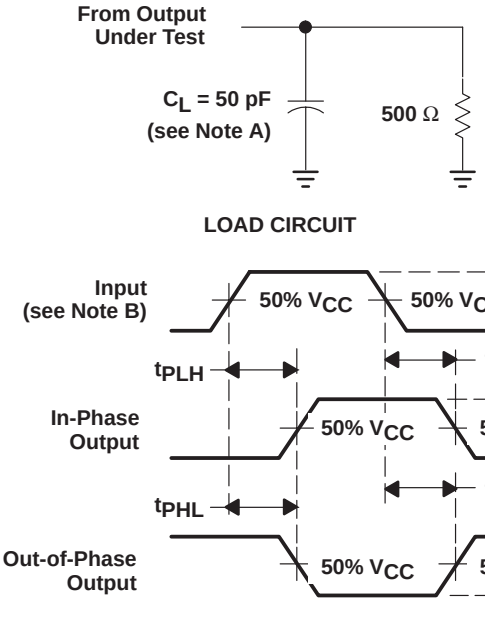

NOTES: A. C_L includes probe and jig capacitance.
B. Input pulses are supplied by generators having the following characteristics: PRR ≤ 10 MHz, Z_O = 50 Ω, t_r ≤ 2.5 ns, t_f ≤ 2.5 ns.
C. The outputs are measured one at a time with one input transition per measurement.

Figure 1. Load Circuit and Voltage Waveforms

PACKAGING INFORMATION

Orderable Device	Status (1)	Package Type	Package Drawing	Pins	Package Qty	Eco Plan (2)	Lead/Ball Finish	MSL Peak Temp (3)
74ACT11810D	OBSOLETE	SOIC	D	16		TBD	Call TI	Call TI
74ACT11810DR	OBSOLETE	SOIC	D	16		TBD	Call TI	Call TI
74ACT11810DR	OBSOLETE	SOIC	D	16		TBD	Call TI	Call TI
74ACT11810N	OBSOLETE	PDIP	N	16		TBD	Call TI	Call TI
74ACT11810N	OBSOLETE	PDIP	N	16		TBD	Call TI	Call TI

(1) The marketing status values are defined as follows:
ACTIVE: Product device recommended for new designs.
LIFEBUY: TI has announced that the device will be discontinued, and a lifetime-buy period is in effect.
NRND: Not recommended for new designs. Device is in production to support existing customers, but TI does not recommend using this part in a new design.
PREVIEW: Device has been announced but is not in production. Samples may or may not be available.
OBSOLETE: TI has discontinued the production of the device.

(2) Eco Plan - The planned eco-friendly classification: Pb-Free (RoHS) or Green (RoHS & no Sb/Br) - please check http://www.ti.com/productcontent for the latest availability information and additional product content details.
TBD: The Pb-Free/Green conversion plan has not been defined.
Pb-Free (RoHS): TI's terms "Lead-Free" or "Pb-Free" mean semiconductor products that are compatible with the current RoHS requirements for all 6 substances, including the requirement that lead not exceed 0.1% by weight in homogeneous materials. Where designed to be soldered at high temperatures, TI Pb-Free products are suitable for use in specified lead-free processes.
Green (RoHS & no Sb/Br): TI defines "Green" to mean Pb-Free (RoHS compatible), and free of Bromine (Br) and Antimony (Sb) based flame retardants (Br or Sb do not exceed 0.1% by weight in homogeneous material)

(3) MSL, Peak Temp. -- The Moisture Sensitivity Level rating according to the JEDEC industry standard classifications, and peak solder temperature.

Important Information and Disclaimer: The information provided on this page represents TI's knowledge and belief as of the date that it is provided. TI bases its knowledge and belief on information provided by third parties, and makes no representation or warranty as to the accuracy of such information. Efforts are underway to better integrate information from third parties. TI has taken and continues to take reasonable steps to provide representative and accurate information but may not have conducted destructive testing or chemical analysis on incoming materials and chemicals. TI and TI suppliers consider certain information to be proprietary, and thus CAS numbers and other limited information may not be available for release.

In no event shall TI's liability arising out of such information exceed the total purchase price of the TI part(s) at issue in this document sold by TI to Customer on an annual basis.

IMPORTANT NOTICE

Texas Instruments Incorporated and its subsidiaries (TI) reserve the right to make corrections, modifications, enhancements, improvements, and other changes to its products and services at any time and to discontinue any product or service without notice. Customers should obtain the latest relevant information before placing orders and should verify that such information is current and complete. All products are sold subject to TI's terms and conditions of sale supplied at the time of order acknowledgment.

TI warrants performance of its hardware products to the specifications applicable at the time of sale in accordance with TI's standard warranty. Testing and other quality control techniques are used to the extent TI deems necessary to support this warranty. Except where mandated by government requirements, testing of all parameters of each product is not necessarily performed.

TI assumes no liability for applications assistance or customer product design. Customers are responsible for their products and applications using TI components. To minimize the risks associated with customer products and applications, customers should provide adequate design and operating safeguards.

TI does not warrant or represent that any license, either express or implied, is granted under any TI patent right, copyright, mask work right, or other TI intellectual property right relating to any combination, machine, or process in which TI products or services are used. Information published by TI regarding third-party products or services does not constitute a license from TI to use such products or services or a warranty or endorsement thereof. Use of such information may require a license from a third party under the patents or other intellectual property of the third party, or a license from TI under the patents or other intellectual property of TI.

Reproduction of TI information in TI data books or data sheets is permissible only if reproduction is without alteration and is accompanied by all associated warranties, conditions, limitations, and notices. Reproduction of this information with alteration is an unfair and deceptive business practice. TI is not responsible or liable for such altered documentation. Information of third parties may be subject to additional restrictions.

Resale of TI products or services with statements different from or beyond the parameters stated by TI for that product or service voids all express and any implied warranties for the associated TI product or service and is an unfair and deceptive business practice. TI is not responsible or liable for any such statements.

TI products are not authorized for use in safety-critical applications (such as life support) where a failure of the TI product would reasonably be expected to cause severe personal injury or death, unless officers of the parties have executed an agreement specifically governing such use. Buyers represent that they have all necessary expertise in the safety and regulatory ramifications of their applications, and acknowledge and agree that they are solely responsible for all legal, regulatory and safety-related requirements concerning their products and any use of TI products in such safety-critical applications, notwithstanding any applications-related information or support that may be provided by TI. Further, Buyers must fully indemnify TI and its representatives against any damages arising out of the use of TI products in such safety-critical applications.

TI products are neither designed nor intended for use in military/aerospace applications or environments unless the TI products are specifically designated by TI as military-grade or "enhanced plastic." Only products designated by TI as military-grade meet military specifications. Buyers acknowledge and agree that any such use of TI products which TI has not designated as military-grade is solely at the Buyer's risk, and that they are solely responsible for compliance with all legal and regulatory requirements in connection with such use.

TI products are neither designed nor intended for use in automotive applications or environments unless the specific TI products are designated by TI as compliant with ISO/TS 16949 requirements. Buyers acknowledge and agree that, if they use any non-designated products in automotive applications, TI will not be responsible for any failure to meet such requirements.

Following are URLs where you can obtain information on other Texas Instruments products and application solutions:

Products		**Applications**	
Amplifiers	amplifier.ti.com	Audio	www.ti.com/audio
Data Converters	dataconverter.ti.com	Automotive	www.ti.com/automotive
DLP® Products	www.dlp.com	Communications and Telecom	www.ti.com/communications
DSP	dsp.ti.com	Computers and Peripherals	www.ti.com/computers
Clocks and Timers	www.ti.com/clocks	Consumer Electronics	www.ti.com/consumer-apps
Interface	interface.ti.com	Energy	www.ti.com/energy
Logic	logic.ti.com	Industrial	www.ti.com/industrial
Power Mgmt	power.ti.com	Medical	www.ti.com/medical
Microcontrollers	microcontroller.ti.com	Security	www.ti.com/security
RFID	www.ti-rfid.com	Space, Avionics & Defense	www.ti.com/space-avionics-defense
RF/IF and ZigBee® Solutions	www.ti.com/lprf	Video and Imaging	www.ti.com/video
		Wireless	www.ti.com/wireless-apps

Mailing Address: Texas Instruments, Post Office Box 655303, Dallas, Texas 75265
Copyright © 2010, Texas Instruments Incorporated