- **Inputs Are TTL-Voltage Compatible**
- **Flow-Through Architecture Optimizes PCB Layout**
- **Center-Pin V_{CC} and GND Configurations Minimize High-Speed Switching Noise**
- ***EPIC*™ (Enhanced-Performance Implanted CMOS) 1-μm Process**
- **500-mA Typical Latch-Up Immunity at 125°C**
- **Package Options Include Plastic Small-Outline (DW) and Shrink Small-Outline (DB) Packages, and Standard Plastic 300-mil DIPs (NT)**

DB, DW, OR NT PACKAGE
(TOP VIEW)

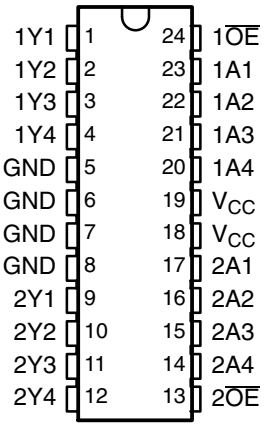

description

This octal buffer or line driver is designed specifically to improve both the performance and density of 3-state memory address drivers, clock drivers, and bus-oriented receivers and transmitters. This device provides inverting outputs and symmetrical active-low output-enable ($\overline{OE}$) inputs. This device features high fan-out and improved fan-in.

The 74ACT11240 is characterized for operation from –40°C to 85°C.

FUNCTION TABLE
(each buffer)

INPUTS		OUTPUT
$\overline{OE}$	A	Y
L	H	L
L	L	H
H	X	Z

logic symbol†

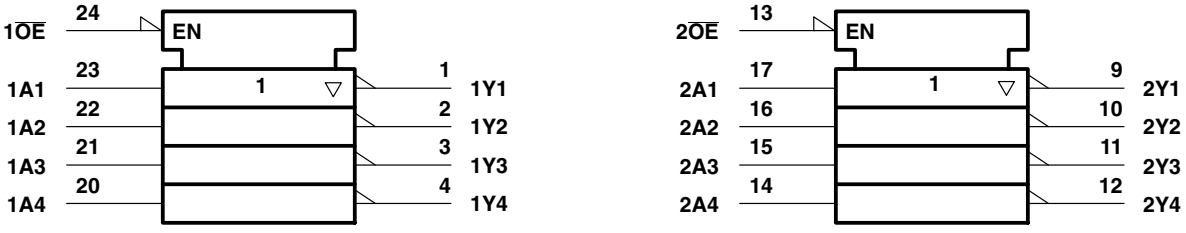

† This symbol is in accordance with ANSI/IEEE Std 91-1984 and IEC Publication 617-12.

Please be aware that an important notice concerning availability, standard warranty, and use in critical applications of Texas Instruments semiconductor products and disclaimers thereto appears at the end of this data sheet.

EPIC is a trademark of Texas Instruments Incorporated.

PRODUCTION DATA information is current as of publication date. Products conform to specifications per the terms of Texas Instruments standard warranty. Production processing does not necessarily include testing of all parameters.

Copyright © 1996, Texas Instruments Incorporated

logic diagram (positive logic)

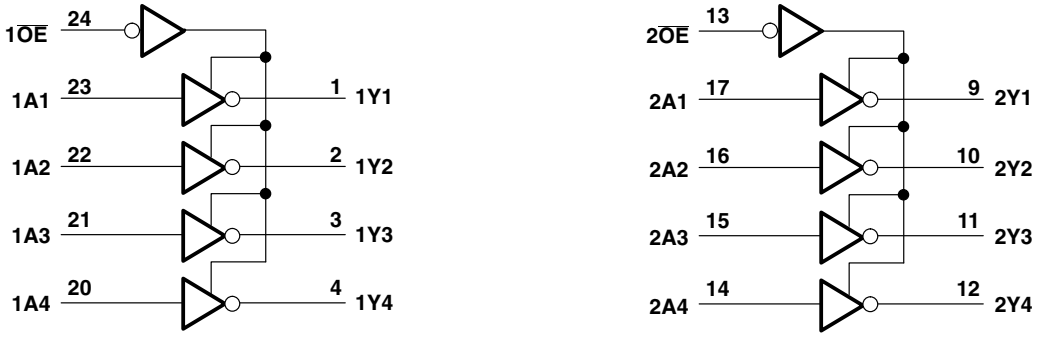

absolute maximum ratings over operating free-air temperature range (unless otherwise noted)†

Supply voltage range, V_{CC} . . . . . –0.5 V to 6 V
Input voltage range, V_I (see Note 1) . . . . . –0.5 V to V_{CC} + 0.5 V
Output voltage range, V_O (see Note 1) . . . . . –0.5 V to V_{CC} + 0.5 V
Input clamp current, I_{IK} (V_I < 0 or V_I > V_{CC}) . . . . . ±20 mA
Output clamp current, I_{OK} (V_O < 0 or V_O > V_{CC}) . . . . . ±50 mA
Continuous output current, I_O (V_O = 0 to V_{CC}) . . . . . ±50 mA
Continuous current through V_{CC} or GND . . . . . ±200 mA
Maximum power dissipation at T_A = 55°C (in still air) (see Note 2): DB package . . . . . 0.65 W
DW package . . . . . 1.7 W
NT package . . . . . 1.3 W
Storage temperature range, T_{stg} . . . . . –65°C to 150°C

† Stresses beyond those listed under “absolute maximum ratings” may cause permanent damage to the device. These are stress ratings only, and functional operation of the device at these or any other conditions beyond those indicated under “recommended operating conditions” is not implied. Exposure to absolute-maximum-rated conditions for extended periods may affect device reliability.

NOTES: 1. The input and output voltage ratings may be exceeded if the input and output current ratings are observed.
2. The maximum package power dissipation is calculated using a junction temperature of 150°C and a board trace length of 750 mils, except for the NT package, which has a trace length of zero.

recommended operating conditions

		MIN	NOM	MAX	UNIT
V_{CC}	Supply voltage	4.5	5	5.5	V
V_{IH}	High-level input voltage	2			V
V_{IL}	Low-level input voltage			0.8	V
V_I	Input voltage	0		V_{CC}	V
V_O	Output voltage	0		V_{CC}	V
I_{OH}	High-level output current			–24	mA
I_{OL}	Low-level output current			24	mA
$\Delta t/\Delta v$	Input transition rise or fall rate	0		10	ns/V
T_A	Operating free-air temperature	–40		85	°C

electrical characteristics over recommended operating free-air temperature range (unless otherwise noted)

PARAMETER	TEST CONDITIONS	V_{CC}	T_A = 25°C					UNIT
			MIN	TYP	MAX	MIN	MAX	
V_{OH}	I_{OH} = –50 μA	4.5 V	4.4			4.4		V
		5.5 V	5.4			5.4		
	I_{OH} = –24 mA	4.5 V	3.94			3.8		
		5.5 V	4.94			4.8		
	I_{OH} = –75 mA†	5.5 V				3.85		
V_{OL}	I_{OL} = 50 μA	4.5 V			0.1		0.1	V
		5.5 V			0.1		0.1	
	I_{OL} = 24 mA	4.5 V			0.36		0.44	
		5.5 V			0.36		0.44	
	I_{OL} = 75 mA†	5.5 V					1.65	
I_{OZ}	V_O = V_{CC} or GND	5.5 V			±0.5		±5	μA
I_I	V_I = V_{CC} or GND	5.5 V			±0.1		±1	μA
I_{CC}	V_I = V_{CC} or GND, I_O = 0	5.5 V			8		80	μA
ΔI_{CC}‡	One input at 3.4 V, Other inputs at GND or V_{CC}	5.5 V			0.9		1	mA
C_i	V_I = V_{CC} or GND	5 V		4				pF
C_o	V_I = V_{CC} or GND	5 V		10				pF

† Not more than one output should be tested at a time, and the duration of the test should not exceed 10 ms.
‡ This is the increase in supply current for each input that is at one of the specified TTL voltage levels rather than 0 V or V_{CC}.

switching characteristics over recommended operating free-air temperature range, V_{CC} = 5 V ± 0.5 V (unless otherwise noted)

PARAMETER	FROM (INPUT)	TO (OUTPUT)	T_A = 25°C			MIN	MAX	UNIT
			MIN	TYP	MAX			
t_{PLH}	A	Y	1.5	6.5	9.9	1.5	10.6	ns
t_{PHL}			1.5	6	8	1.5	8.7	
t_{PZH}	$\overline{OE}$	Y	1.5	7.5	11.7	1.5	12.5	ns
t_{PZL}			1.5	7.3	11.5	1.5	12.3	
t_{PHZ}	$\overline{OE}$	Y	1.5	7.3	9.4	1.5	10	ns
t_{PLZ}			1.5	7.9	10.3	1.5	10.8	

operating characteristics, V_{CC} = 5 V, T_A = 25°C

PARAMETER			TEST CONDITIONS		TYP	UNIT
C_{pd}	Power dissipation capacitance per buffer	Outputs enabled	C_L = 50 pF,	f = 1 MHz	47	pF
		Outputs disabled			13	

PARAMETER MEASUREMENT INFORMATION

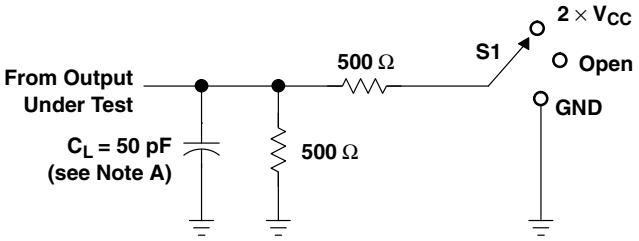

TEST	S1
t_{PLH}/t_{PHL}	Open
t_{PLZ}/t_{PZL}	2 × V_{CC}
t_{PHZ}/t_{PZH}	GND

LOAD CIRCUIT

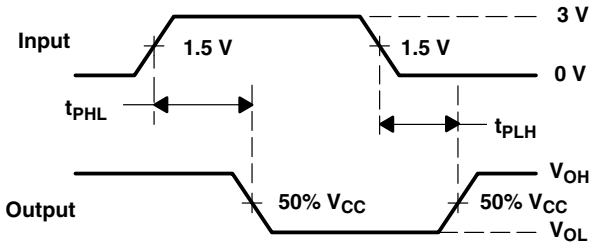

VOLTAGE WAVEFORMS

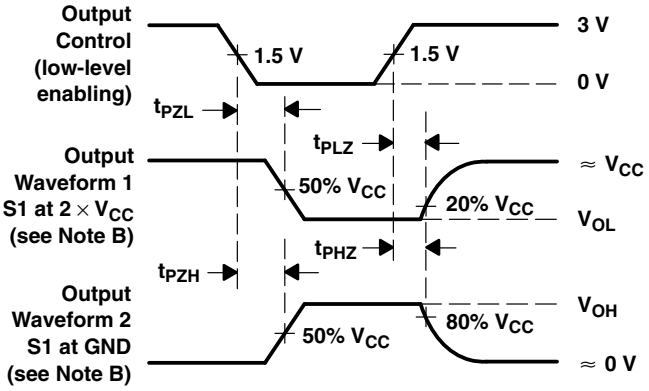

VOLTAGE WAVEFORMS

NOTES: A. C_L includes probe and jig capacitance.
B. Waveform 1 is for an output with internal conditions such that the output is low except when disabled by the output control. Waveform 2 is for an output with internal conditions such that the output is high except when disabled by the output control.
C. All input pulses are supplied by generators having the following characteristics: PRR ≤ 1 MHz, Z_O = 50 Ω, t_r = 3 ns, t_f = 3 ns.
D. The outputs are measured one at a time with one input transition per measurement.

Figure 1. Load Circuit and Voltage Waveforms

PACKAGING INFORMATION

Orderable Device	Status (1)	Package Type	Package Drawing	Pins	Package Qty	Eco Plan (2)	Lead/Ball Finish (6)	MSL Peak Temp (3)	Op Temp (°C)	Device Marking (4/5)	Samples
74ACT11240DW	ACTIVE	SOIC	DW	24	25	Green (RoHS & no Sb/Br)	NIPDAU	Level-1-260C-UNLIM	-40 to 85	ACT11240	Samples
74ACT11240DWR	ACTIVE	SOIC	DW	24	2000	Green (RoHS & no Sb/Br)	NIPDAU	Level-1-260C-UNLIM	-40 to 85	ACT11240	Samples
74ACT11240DWRG4	ACTIVE	SOIC	DW	24	2000	Green (RoHS & no Sb/Br)	NIPDAU	Level-1-260C-UNLIM	-40 to 85	ACT11240	Samples

(1) The marketing status values are defined as follows:
ACTIVE: Product device recommended for new designs.
LIFEBUY: TI has announced that the device will be discontinued, and a lifetime-buy period is in effect.
NRND: Not recommended for new designs. Device is in production to support existing customers, but TI does not recommend using this part in a new design.
PREVIEW: Device has been announced but is not in production. Samples may or may not be available.
OBSOLETE: TI has discontinued the production of the device.

(2) **RoHS:** TI defines "RoHS" to mean semiconductor products that are compliant with the current EU RoHS requirements for all 10 RoHS substances, including the requirement that RoHS substance do not exceed 0.1% by weight in homogeneous materials. Where designed to be soldered at high temperatures, "RoHS" products are suitable for use in specified lead-free processes. TI may reference these types of products as "Pb-Free".
RoHS Exempt: TI defines "RoHS Exempt" to mean products that contain lead but are compliant with EU RoHS pursuant to a specific EU RoHS exemption.
Green: TI defines "Green" to mean the content of Chlorine (Cl) and Bromine (Br) based flame retardants meet JS709B low halogen requirements of <=1000ppm threshold. Antimony trioxide based flame retardants must also meet the <=1000ppm threshold requirement.

(3) MSL, Peak Temp. - The Moisture Sensitivity Level rating according to the JEDEC industry standard classifications, and peak solder temperature.

(4) There may be additional marking, which relates to the logo, the lot trace code information, or the environmental category on the device.

(5) Multiple Device Markings will be inside parentheses. Only one Device Marking contained in parentheses and separated by a "~" will appear on a device. If a line is indented then it is a continuation of the previous line and the two combined represent the entire Device Marking for that device.

(6) Lead/Ball Finish - Orderable Devices may have multiple material finish options. Finish options are separated by a vertical ruled line. Lead/Ball Finish values may wrap to two lines if the finish value exceeds the maximum column width.

Important Information and Disclaimer: The information provided on this page represents TI's knowledge and belief as of the date that it is provided. TI bases its knowledge and belief on information provided by third parties, and makes no representation or warranty as to the accuracy of such information. Efforts are underway to better integrate information from third parties. TI has taken and continues to take reasonable steps to provide representative and accurate information but may not have conducted destructive testing or chemical analysis on incoming materials and chemicals. TI and TI suppliers consider certain information to be proprietary, and thus CAS numbers and other limited information may not be available for release.

In no event shall TI's liability arising out of such information exceed the total purchase price of the TI part(s) at issue in this document sold by TI to Customer on an annual basis.

TAPE AND REEL INFORMATION

REEL DIMENSIONS

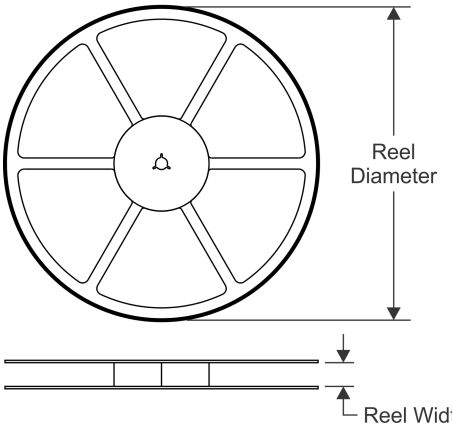

TAPE DIMENSIONS

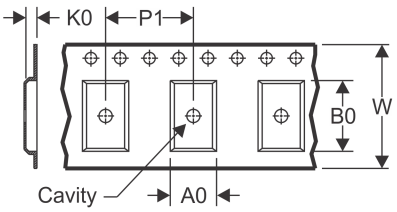

A0	Dimension designed to accommodate the component width
B0	Dimension designed to accommodate the component length
K0	Dimension designed to accommodate the component thickness
W	Overall width of the carrier tape
P1	Pitch between successive cavity centers

QUADRANT ASSIGNMENTS FOR PIN 1 ORIENTATION IN TAPE

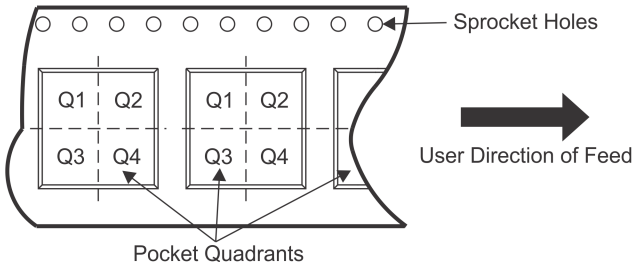

*All dimensions are nominal

Device	Package Type	Package Drawing	Pins	SPQ	Reel Diameter (mm)	Reel Width W1 (mm)	A0 (mm)	B0 (mm)	K0 (mm)	P1 (mm)	W (mm)	Pin1 Quadrant
74ACT11240DWR	SOIC	DW	24	2000	330.0	24.4	10.75	15.7	2.7	12.0	24.0	Q1

TAPE AND REEL BOX DIMENSIONS

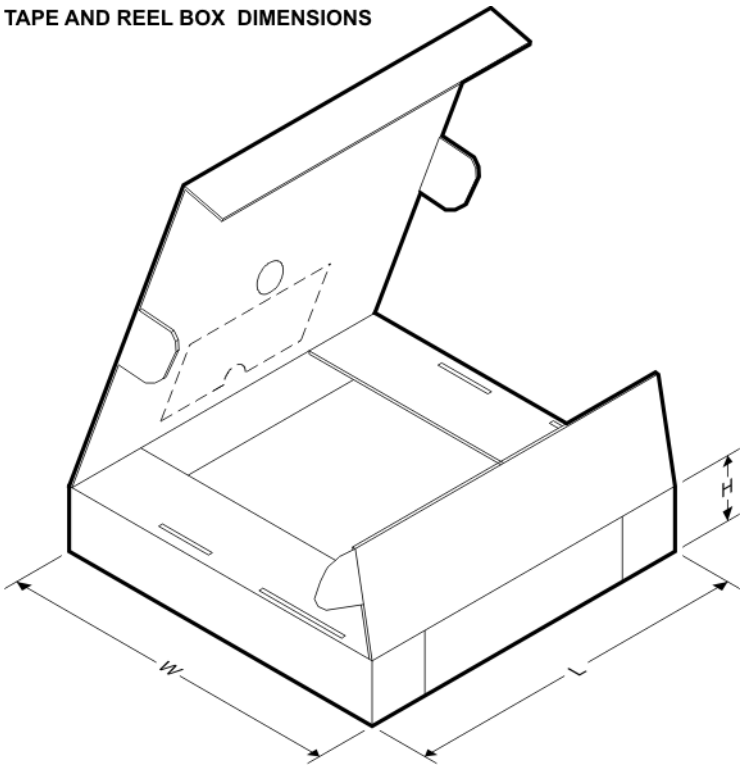

*All dimensions are nominal

Device	Package Type	Package Drawing	Pins	SPQ	Length (mm)	Width (mm)	Height (mm)
74ACT11240DWR	SOIC	DW	24	2000	350.0	350.0	43.0

DW (R–PDSO–G24) PLASTIC SMALL OUTLINE

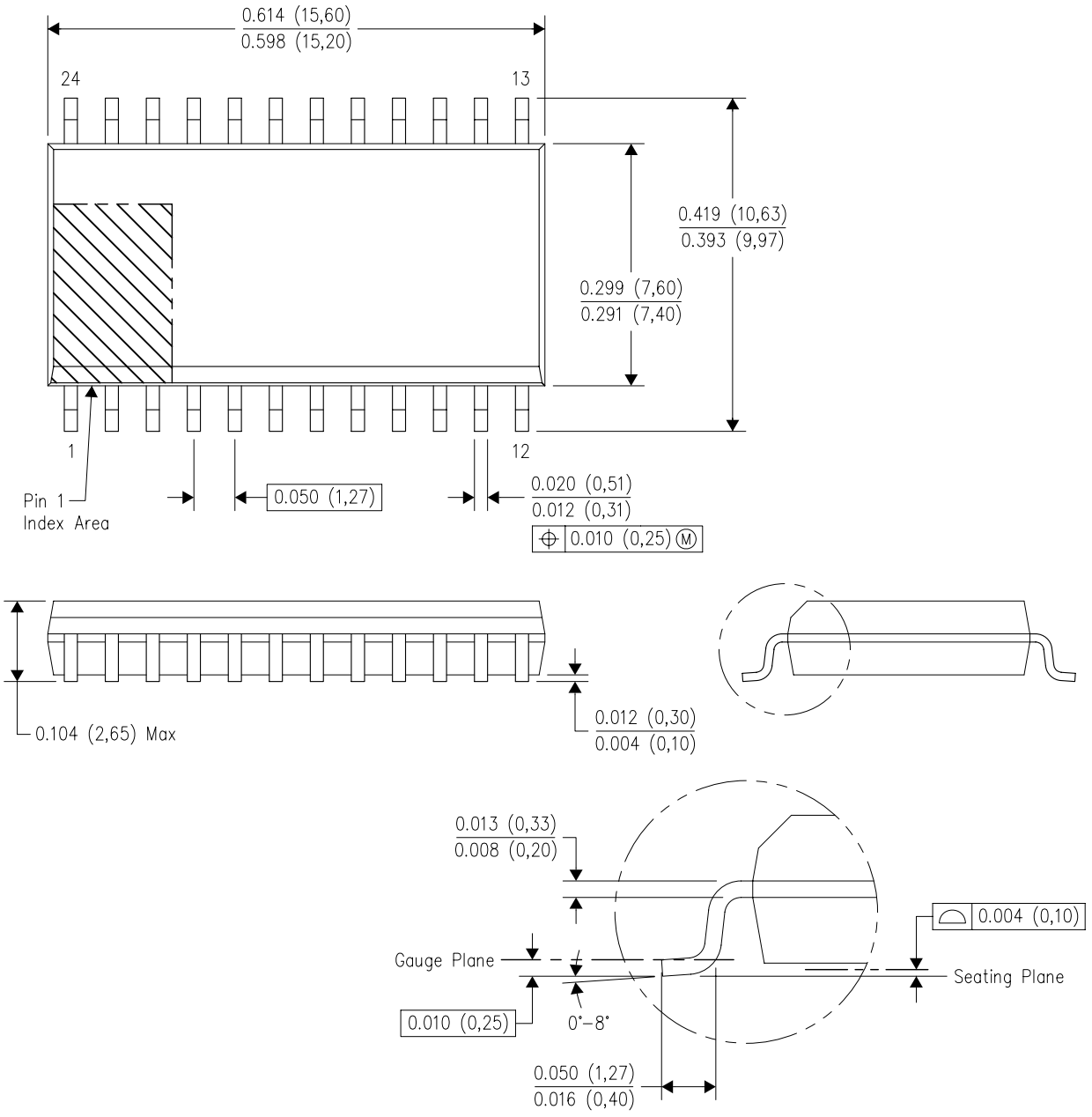

NOTES:
A. All linear dimensions are in inches (millimeters). Dimensioning and tolerancing per ASME Y14.5M–1994.
B. This drawing is subject to change without notice.
C. Body dimensions do not include mold flash or protrusion not to exceed 0.006 (0,15).
D. Falls within JEDEC MS–013 variation AD.

IMPORTANT NOTICE AND DISCLAIMER

TI PROVIDES TECHNICAL AND RELIABILITY DATA (INCLUDING DATASHEETS), DESIGN RESOURCES (INCLUDING REFERENCE DESIGNS), APPLICATION OR OTHER DESIGN ADVICE, WEB TOOLS, SAFETY INFORMATION, AND OTHER RESOURCES “AS IS” AND WITH ALL FAULTS, AND DISCLAIMS ALL WARRANTIES, EXPRESS AND IMPLIED, INCLUDING WITHOUT LIMITATION ANY IMPLIED WARRANTIES OF MERCHANTABILITY, FITNESS FOR A PARTICULAR PURPOSE OR NON-INFRINGEMENT OF THIRD PARTY INTELLECTUAL PROPERTY RIGHTS.

These resources are intended for skilled developers designing with TI products. You are solely responsible for (1) selecting the appropriate TI products for your application, (2) designing, validating and testing your application, and (3) ensuring your application meets applicable standards, and any other safety, security, or other requirements. These resources are subject to change without notice. TI grants you permission to use these resources only for development of an application that uses the TI products described in the resource. Other reproduction and display of these resources is prohibited. No license is granted to any other TI intellectual property right or to any third party intellectual property right. TI disclaims responsibility for, and you will fully indemnify TI and its representatives against, any claims, damages, costs, losses, and liabilities arising out of your use of these resources.

TI’s products are provided subject to TI’s Terms of Sale (www.ti.com/legal/termsofsale.html) or other applicable terms available either on ti.com or provided in conjunction with such TI products. TI’s provision of these resources does not expand or otherwise alter TI’s applicable warranties or warranty disclaimers for TI products.

Mailing Address: Texas Instruments, Post Office Box 655303, Dallas, Texas 75265
Copyright © 2020, Texas Instruments Incorporated