This document was generated on 05/17/2010

PLEASE CHECK WWW.MOLEX.COM FOR LATEST PART INFORMATION

Part Number: 0749920000
Status: Active
Overview: hdm
Description: 2.00mm (.079") Pitch HDM® Board-to-Board Backplane Header, Vertical, Pressfit Tail, Double End, 72 Circuits

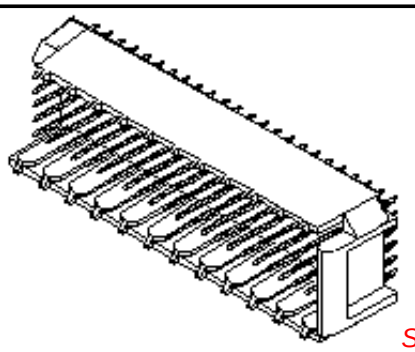

Series image - Reference only

Documents:
Drawing (PDF)
RoHS Certificate of Compliance (PDF)
Product Specification PS-73670-9999 (PDF)

General

Product Family	Backplane Connectors
Series	74993
Application	Backplane, Mezzanine
Component Type	PCB Header
Overview	hdm
Product Name	HDM®
Style	N/A

Physical

Circuits (Loaded)	72
Circuits (maximum)	72
Color - Resin	Black
Durability (mating cycles max)	250
First Mate / Last Break	No
Guide to Mating Part	No
Keying to Mating Part	None
Material - Metal	Phosphor Bronze
Material - Plating Mating	Gold
Material - Plating Termination	Gold
Material - Resin	High Temperature Thermoplastic
Number of Columns	12
Number of Pairs	Open Pin Field
Number of Rows	6
Orientation	Vertical
PC Tail Length (in)	0.138 In
PC Tail Length (mm)	3.50 mm
PCB Locator	No
PCB Retention	None
PCB Thickness Recommended (in)	0.062 In, 0.188 In
PCB Thickness Recommended (mm)	1.60 mm, 4.80 mm
Packaging Type	Tube
Pitch - Mating Interface (in)	0.079 In
Pitch - Mating Interface (mm)	2.00 mm
Pitch - Term. Interface (in)	0.079 In
Pitch - Term. Interface (mm)	2.00 mm
Plating min: Mating (µin)	30
Plating min: Mating (µm)	0.75
Plating min: Termination (µin)	2
Plating min: Termination (µm)	0.05
Polarized to PCB	No
Stackable	Yes
Surface Mount Compatible (SMC)	Yes
Temperature Range - Operating	-55°C to +105°C
Termination Interface: Style	Through Hole - Compliant Pin

EU RoHS	China RoHS
Compliance Status	
Not Reviewed	
REACH SVHC	
Not Reviewed	
Halogen-Free Status	
Not Reviewed	

Need more information on product environmental compliance?

Email productcompliance@molex.com
For a multiple part number RoHS Certificate of Compliance, click here

Please visit the Contact Us section for any non-product compliance questions.

Search Parts in this Series
74993Series

Application Tooling | **FAQ**
Tooling specifications and manuals are found by selecting the products below. Crimp Height Specifications are then contained in the Application Tooling Specification document.
Global

Description	Product #
HDM® Backplane Insertion Signal Contact Tool	0621001400
Extraction Tool	0621001000

Electrical

Current - Maximum per Contact	1A
Data Rate	1.0 Gbps
Real Signals (per 25mm)	75
Shield Type	N/A
Shielded	No
Voltage - Maximum	250V AC

Material Info

Reference - Drawing Numbers

Application Specification	AS-73642-9998
Packaging Specification	PK-70873-0818
Product Specification	PS-73670-9999
Sales Drawing	SD-74992-001

HDM and High Density Metric are trademarks of Amphenol Corporation

NOTES:

1. MATERIALS: HOUSING--LIQUID CRYSTAL POLYMER (LCP), GLASS-FILLED, UL94V-0, COLOR: BLACK,
   TERMINAL: PHOSPHOR BRONZE.
2. FINISH: SEE SHEET 2.
3. THIS PART CONFORMS TO MOLEX PRODUCT SPECIFICATIONS PS-73670-9999 AND PS-73780-999.
4. PACKAGE PER PK-70873-0818 OR PK-70873-0868.
5. PARTS MARKED WITH PART NUMBER AND DATE CODE, ON EITHER SIDE, APPROXIMATELY WHERE SHOWN.

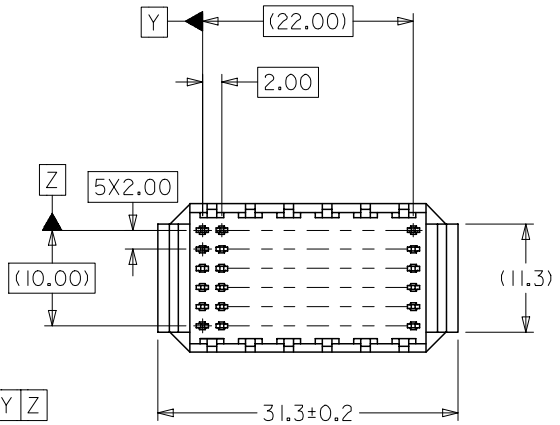

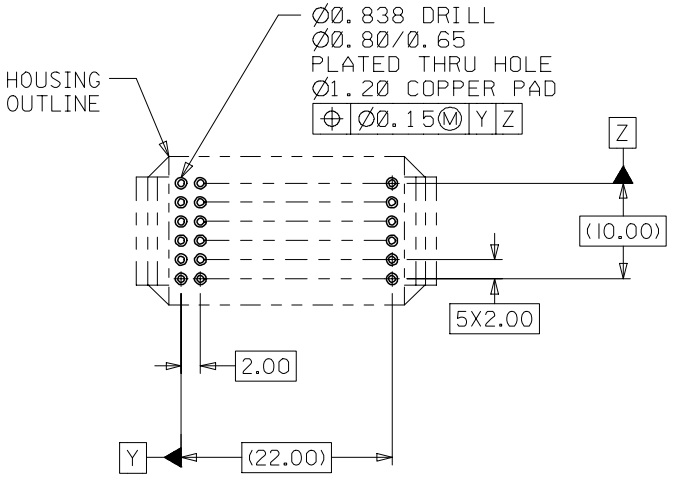

PCB LAYOUT: COMPONENT SIDE

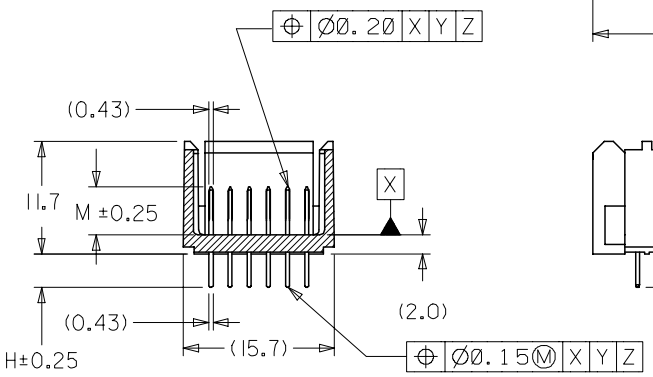

SECTION A-A

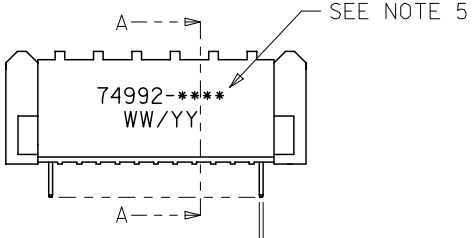

2	C
1	C
SHT	REV

MODIFY FINISH NOTE
EC NO: UCP2007-2259 2007/03/13
DRWN:MSIBARRA 2007/03/21
CH'KD:BBARKER
APPR:SMILLER 2007/03/22
DESCRIPTION
REV

QUALITY SYMBOLS
▼=0
▽=0

GENERAL TOLERANCES (UNLESS SPECIFIED)

	mm	INCH
4 PLACES	± ---	± ---
3 PLACES	± ---	± ---
2 PLACES	± 0.05	± ---
1 PLACE	± 0.10	± ---
ANGULAR ±1/2°		

DRAFT WHERE APPLICABLE MUST REMAIN WITHIN DIMENSIONS

DIMENSION STYLE: MM ONLY
SCALE: 2:1
DESIGN UNITS: METRIC
THIRD ANGLE PROJECTION

DRAWN BY	JBINGHAM	DATE 2001/10/08
CHECKED BY	SREED	DATE 2001/10/08
APPROVED BY	CBIXLER	DATE 2001/10/08

TITLE: SALES ASSY HDM BACKPLANE DOUBLE END WALL OPTION 72 POSITION

MOLEX INCORPORATED

MATERIAL NO.: SEE CHART
DOCUMENT NO.: SD-74992-001
SHEET NO.: 1 OF 1
SIZE: B

THIS DRAWING CONTAINS INFORMATION THAT IS PROPRIETARY TO MOLEX INCORPORATED AND SHOULD NOT BE USED WITHOUT WRITTEN PERMISSION

FINISH:
GOLD FLASH:
0.75 MICROMETERS MINIMUM SELECTIVE GOLD (Au) IN MATING AREA
0.05 MICROMETERS MINIMUM GOLD FLASH OVERALL
NICKEL (Ni) UNDERPLATE OVERALL.
TIN:
0.75 MICROMETERS MINIMUM SELECTIVE GOLD (Au) IN MATING AREA
2.50 MICROMETERS MINIMUM SELECTIVE TIN (Sn) IN TAIL AREA
NICKEL (Ni) UNDERPLATE OVERALL.
TIN/LEAD:
0.75 MICROMETERS MINIMUM SELECTIVE GOLD (Au) IN MATING AREA
0.38 MICROMETERS MINIMUM SELECTIVE TIN/LEAD (Sn/Pb) IN TAIL AREA
NICKEL (Ni) UNDERPLATE OVERALL.

MATERIAL NUMBER ASSIGNMENT

CONSULT FACTORY FOR AVAILABLE COMBINATIONS

74992-* * * *

NUMBER	TAIL STYLE
0	PRESSFIT
1	SOLDER
2	SINGLE-END MIDPLANE
3	DOUBLE-END MIDPLANE

NUMBER	DIM "H"
0	3.5
1	3.0
2	2.5
3	2.0
4	7.0
5	11.5

NUMBER	DIM "M"
0	5.0
1	5.5
2	6.0

NUMBER	TAIL PLATING
0	GOLD FLASH
1 SOLDERTAIL	TIN
1 PRESSFIT	TIN/LEAD

MODIFY FINISH
EC NO: UCP2007-2259 2007/03/13
DRWN:MSIBARRA 2007/03/21
CH'KD:BBARKER 2007/03/22
APPR:SMILLER
DESCRIPTION
REV

QUALITY SYMBOLS
▼=0
▽=0

GENERAL TOLERANCES (UNLESS SPECIFIED)

	mm	INCH
4 PLACES	± ---	± ---
3 PLACES	± ---	± ---
2 PLACES	± ---	± ---
1 PLACE	± ---	± ---
ANGULAR ±1/2°		

DRAFT WHERE APPLICABLE MUST REMAIN WITHIN DIMENSIONS

DIMENSION STYLE: MM ONLY
SCALE: ---
DESIGN UNITS: METRIC
THIRD ANGLE PROJECTION

DRAWN BY: JBINGHAM DATE: 2001/10/08
CHECKED BY: SREED DATE: 2001/10/08
APPROVED BY: CBIXLER DATE: 2001/10/08

TITLE: SALES ASSY HDM BACKPLANE DOUBLE END WALL OPTION 72 POSITION

MOLEX INCORPORATED

MATERIAL NO.: SEE CHART
DOCUMENT NO.: SD-74992-001
SHEET NO.: 2 OF 2

SIZE: B

THIS DRAWING CONTAINS INFORMATION THAT IS PROPRIETARY TO MOLEX INCORPORATED AND SHOULD NOT BE USED WITHOUT WRITTEN PERMISSION