CUSTOMER TERMINAL	RoHS	LEAD(Pb)–FREE
Sn96% Ag4%	Yes	Yes (6B)

more than you expect

Midcom

WÜRTH ELEKTRONIK

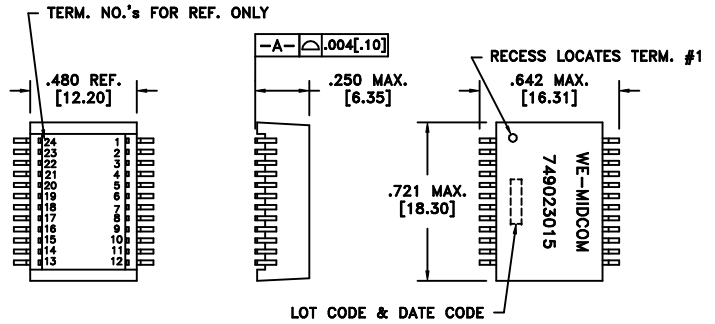

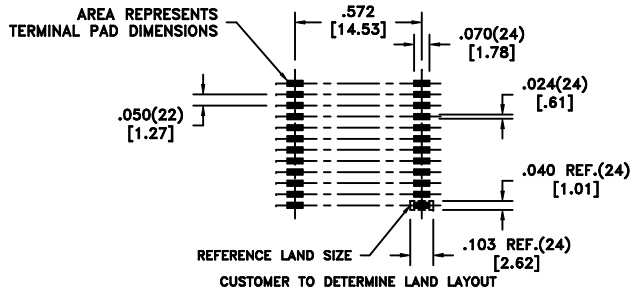

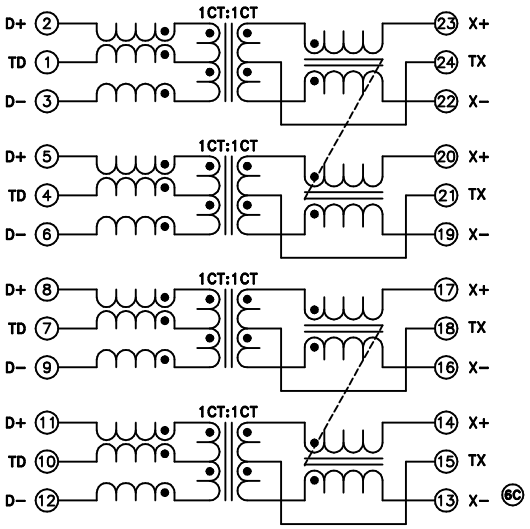

ELECTRICAL SPECIFICATIONS @ 25°C unless otherwise noted:

PARAMETER		TEST CONDITIONS	VALUE
INDUCTANCE	23–22	100kHz, 100mVAC, 8mADC, Ls	350uH min.
INDUCTANCE	20–19	100kHz, 100mVAC, 8mADC, Ls	350uH min.
INDUCTANCE	17–16	100kHz, 100mVAC, 8mADC, Ls	350uH min.
INDUCTANCE	14–13	100kHz, 100mVAC, 8mADC, Ls	350uH min.
DIELECTRIC	1–24	tie(1+4+7+10, 15+18+21+24) 1800Vrms, 1 second	1500Vrms, 1 minute
INSERTION LOSS		300k – 125MHz	–1.2dB max.
RETURN LOSS		500kHz – 40MHz	–18dB min.
RETURN LOSS		40M – 60MHz	–15dB min.
RETURN LOSS		60M – 80MHz	–12dB min.
RETURN LOSS		80M – 100MHz	–10dB min.
CROSSTALK		300kHz – 100MHz	–35dB min.
CMRR		300k – 32MHz	–42dB min.
CMRR		32M – 100MHz	–33dB min.

GENERAL SPECIFICATIONS:

OPERATING TEMPERATURE RANGE: 0°C to +70°C.

COPLANARITY: All 24 terminals must lie on a plane within .004 [.10] of Surface A after lead tinning.

Designed to handle 350mADC and meet 802.3af.

REV.	DATE
6C	12/10
6B	2/10
6A	1/08

Packaging Specifications
Method: Tape & Reel
PKG–0653
www.we–online.com/midcom
SEE REVISION SHEET FOR REVISION LEVEL

CONVENTION PLACEMENT

Tolerances unless otherwise specified:
Angles: ±1° Decimals: ±.005 [.13]
Fractions: ±1/64 Footprint: ±.005 [.13]
This drawing is dual dimensioned. Dimensions in brackets are in millimeters.

DRAWING TITLE
TRANSFORMER
Gigabit & PoE
eiSos p/n: 749023015

compliant RoHS

PART NO.
749023015

SPECIFICATION SHEET 1 OF 1