Spezifikation für Freigabe / specification for release

Kunde / customer :
Artikelnummer / part number : **7490220122**

Bezeichnung : **LAN-Übertrager WE-LAN**
description : **LAN-Transformer WE-LAN**

DATUM / DATE : 2016-07-26

A Mechanische Abmessungen / dimensions :

1000 BaseT 4PPoE

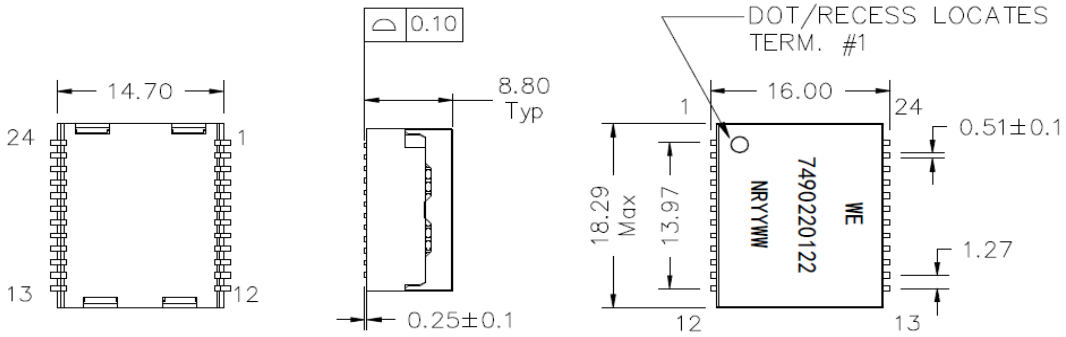

B Elektrische Eigenschaften / electrical properties :

Eigenschaften / properties	Testbedingungen / test conditions		Wert / value	Einheit / unit	tol.
Induktivität / Inductance	**100kHz / 100mV @ 24mA DC-Bias**	OCL	**350**	µH	**min.**
Übersetzungsverhältnis / Turns ratio	**100kHz / 100mV**	1CT:1CT	**1 : 1**	Tx	**±2%**
			1 : 1	Rx	
Insertion Loss	**1MHz - 100 MHZ**	IL	**-1,0**	dB	**max.**
Return Loss	**1MHz - 30 MHZ**	RL	**-18**	dB	**min.**
	30MHz - 60 MHZ		**-14**		
	60MHz - 80 MHZ		**-12**		
	80MHz - 100 MHZ		**-10**		
Common to Common Mode Rejection	**1MHz - 30MHz**	CMRR	**-40**	dB	min.
	30MHz - 60 MHz		**-35**		
	60MHz - 100MHz		**-30**		
Crosstalk	**1MHz - 60 MHZ**	CT	**-35**	dB	**min.**
	60MHz - 100 MHZ		**-30**		

C Lötpad / soldering spec. :

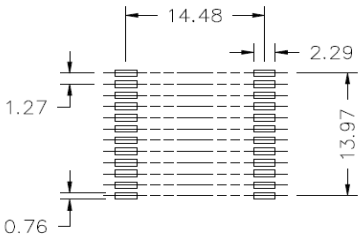

D Prüfgeräte / test equipment :

Agilent E5071C

E Testbedingungen / test conditions :

Luftfeuchtigkeit / Humidity: 33%
Umgebungstemperatur / Temperature: +25°C

F Werkstoffe & Zulassungen / material & approvals :

Basismaterial / Base material: Ferrit / Ferrite
Draht / Wire: 0UEW/Y 180
Kontaktmaterial / Contact plating: Cu-Ni-Sn
Gehäuse / Case: DAP Black per UL 94V-0

G Eigenschaften / general specifications :

Betriebstemp. / operating temperature: -40°C - +85°C
Hochspannungsprüfung / Hipot test: 1500Vrms 1min.
Geeignet für 1000BaseT gemäß kommendem IEEE 802.3bt /
Compliant with upcoming IEEE 802.3bt for 4PPoE

Freigabe erteilt / general release:

Kunde / customer

Datum / date — Unterschrift / signature

Würth Elektronik

Geprüft / checked — Kontrolliert / approved

Name	Änderung / modification	Datum / date
JaB	Version 02	2016-07-26
JaB	Version 01	2016-04-12
JLiu	Preliminary	2015-08-18

Würth Elektronik eiSos GmbH & Co.KG
D-74638 Waldenburg · Max-Eyth-Straße 1 - 3 · Germany · Telefon (+49) (0) 7942 - 945 - 0 · Telefax (+49) (0) 7942 - 945 - 400
http://www.we-online.com

Spezifikation für Freigabe / specification for release

Kunde / customer :
Artikelnummer / part number : **7490220122**

Bezeichnung : **LAN-Übertrager WE-LAN**
description : **LAN-Transformer WE-LAN**

DATUM / DATE : 2016-07-26

H PoE Eigenschaften :	**H PoE Specifications :**
Designed für Anwendungen bis 900mA	Designed to support applications up to 900mA
pro Mittelanzapfung	per centre tap
Designed für 45W Anwendungen wenn zwei Kanäle beströmt	Designed for 45W applications when using two channels
Designed für 90W Anwendungen wenn vier Kanäle beströmt	Designed for 90W applications when using four channels

I Schaltbild / Schematics :

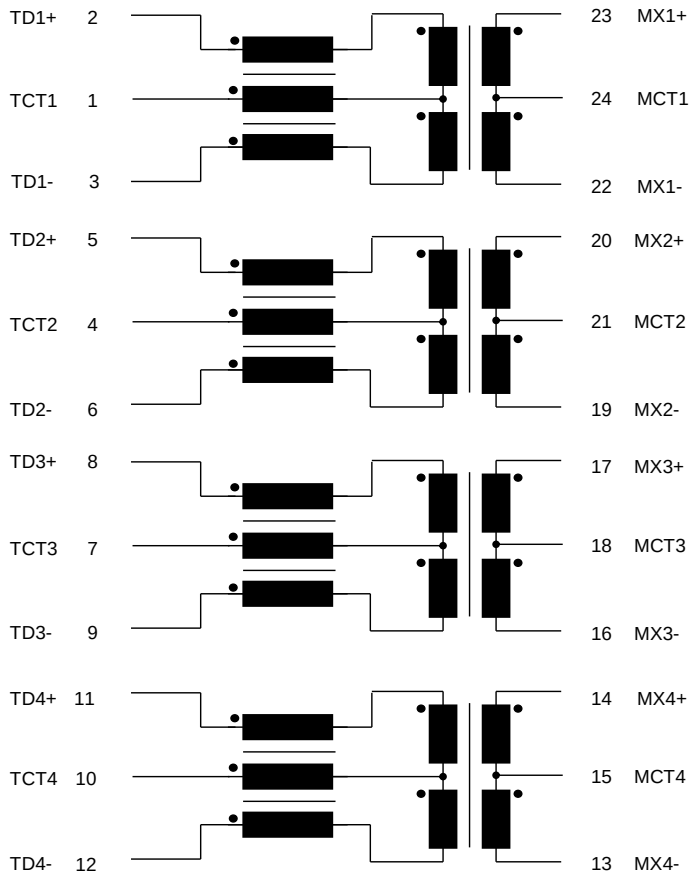

Datum / date

Unterschrift / signature

Würth Elektronik

Geprüft / checked

Kontrolliert / approved

JaB	Version 02	2016-07-26
JaB	Version 01	2016-04-12
JLiu	Preliminary	2015-08-18
Name	**Änderung / modification**	Datum / date

Würth Elektronik eiSos GmbH & Co.KG

D-74638 Waldenburg · Max-Eyth-Straße 1 - 3 · Germany · Telefon (+49) (0) 7942 - 945 - 0 · Telefax (+49) (0) 7942 - 945 - 400
http://www.we-online.com

Spezifikation für Freigabe / specification for release

Kunde / customer :
Artikelnummer / part number : **7490220122**

Bezeichnung : **LAN-Übertrager WE-LAN**
description : **LAN-Transformer WE-LAN**

DATUM / DATE : 2016-07-26

I Rollenspezifikation / tape and reel specification :

PACKAGING(Tape & Reel)

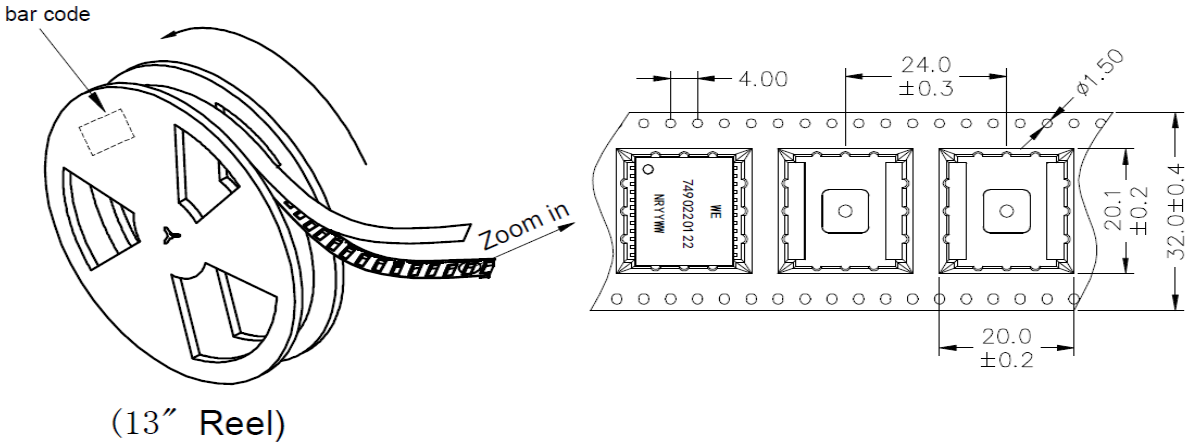

(13″ Reel)

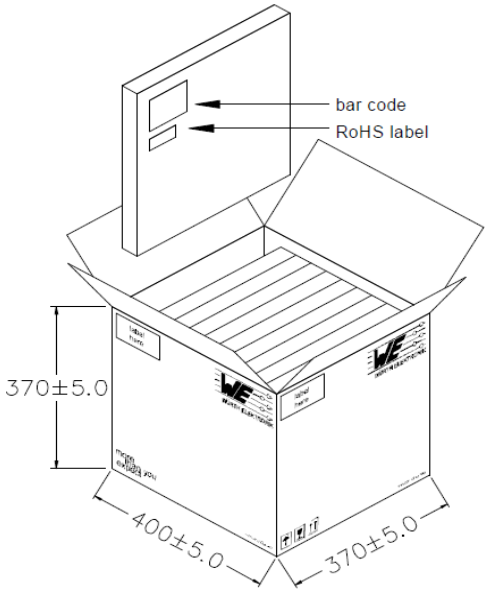

Packing Quality:

290 pcs Finished Goods / Reel

8 Reels (2320pcs Finished Goods) / Carton

Freigabe erteilt / general release:	Kunde / customer			
Datum / date	Unterschrift / signature			
	Würth Elektronik	JaB	Version 02	2016-07-26
		JaB	Version 01	2016-04-12
		JLiu	Preliminary	2015-08-18
Geprüft / checked	Kontrolliert / approved	Name	**Änderung / modification**	Datum / date

This electronic component has been designed and developed for usage in general electronic equipment. Before incorporating this component into any equipment where higher safety and reliability is especially required or if there is the possibility of direct damage or injury to human body, for example in the range of aerospace, aviation, nuclear control, submarine, transportation, (automotive control, train control, ship control), transportation signal, disaster prevention, medical, public information network etc. Würth Elektronik eiSos GmbH must be informed before the design-in stage. In addition, sufficient reliability evaluation checks for safety must be performed on every electronic component which is used in electrical circuits that require high safety and reliability functions or performance.

Würth Elektronik eiSos GmbH & Co.KG
D-74638 Waldenburg · Max-Eyth-Straße 1 - 3 · Germany · Telefon (+49) (0) 7942 - 945 - 0 · Telefax (+49) (0) 7942 - 945 - 400
http://www.we-online.com