DRAWING MADE IN THIRD ANGLE PROJECTION

THIS DRAWING IS UNPUBLISHED. RELEASED FOR PUBLICATION .19
© COPYRIGHT 19 BY AMP INCORPORATED. ALL INTERNATIONAL RIGHTS RESERVED.

| LOC | DIST | P | F | ZONE | LTR | DESCRIPTION | DATE | APPD |
|---|---|---|---|---|---|---|---|---|
| BD | 39 | 0 | ✓ | | 0 | REL WAS 87-4870-14 | – | – |

REVISIONS

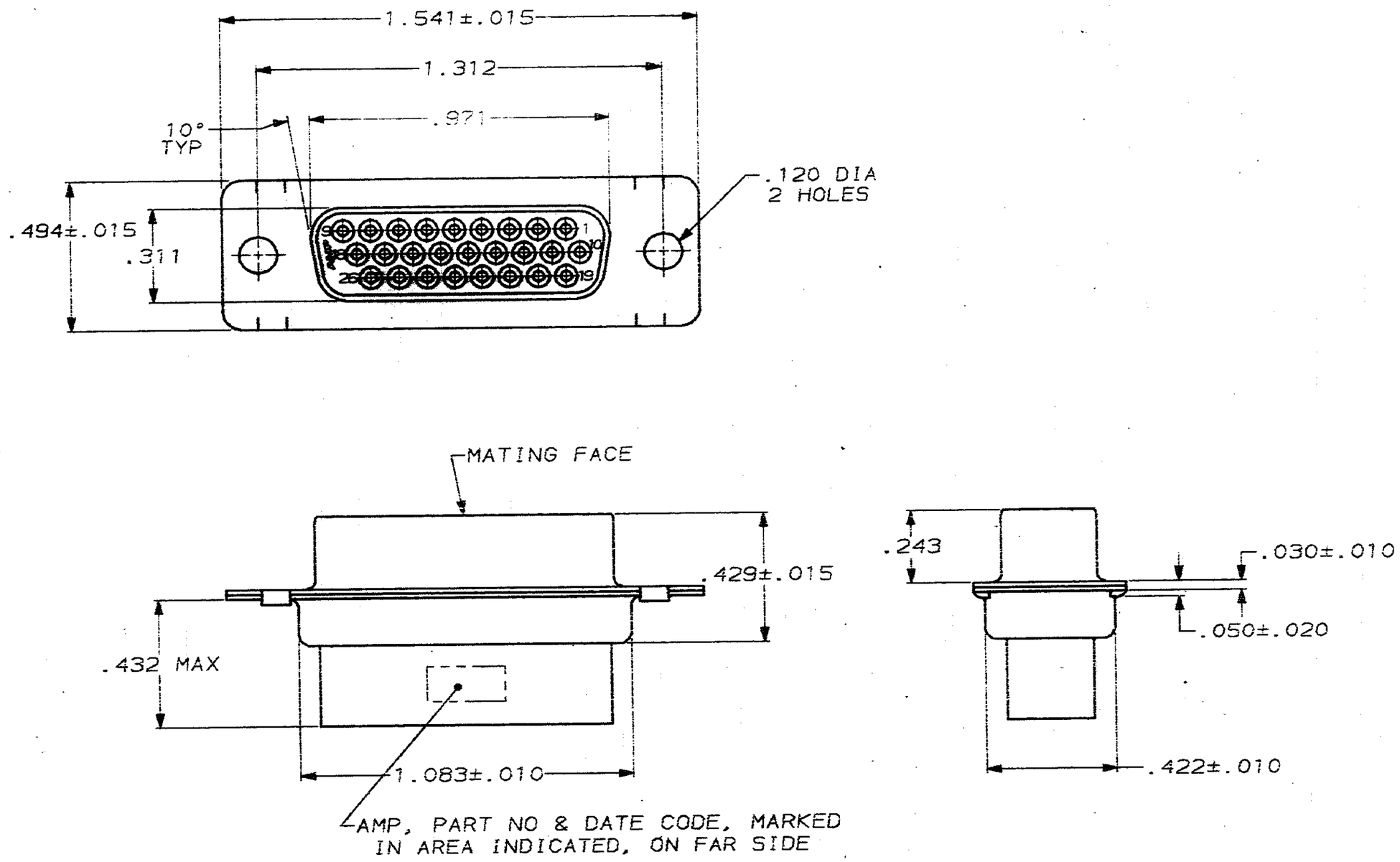


1. CONNECTOR ACCEPTS SIZE 22 DF SOCKET CONTACTS, RETENTION TINES ARE AN INTEGRAL PART OF INSERT.
2. FLAME RETARDANT 94V-0 RATED GLASS FILLED NYLON, COLOR: BLACK.
3. STEEL PER ASTM A109.
4. TIN PLATED PER MIL-T-10727.

748566-1
PART NO

| | | |
|---|---|---|
| DO NOT SCALE PRINT. UNLESS SPECIFIED DIMENSIONS IN INCHES TOLERANCES ON : 2 PLC DEC ± – 3 PLC DEC ± .005 ANGLES ± 2° | DR C. Richard 1.12.88 | AMP INCORPORATED Harrisburg, Pa. 17105 |
| | CHK W.G. Lenker 1-14-88 | |
| MATERIAL MOLDED PARTS: 2 SHELLS: 3 | APPD J. Nichosky 1/14/88 | NAME RECEPTACLE CONNECTOR, SIZE 2, 26 POSN, AMPLIMITE® HDP-22 |
| | APPD V. Kumar 1/19/88 | |
| | PRODUCT SPEC – | |
| FINISH SHELLS: 4 | APPLICATION SPEC – | SIZE C · FSCM NO 00779 · DRAWING NO 748566 |
| | WEIGHT – | SCALE 3:1 · SHEET 1 OF 1 |

AMP 1471-6 REV 3-87

CUSTOMER DRAWING