THIS IS A C.A.D. GENERATED DRAWING
DO NOT MAKE MANUAL REVISIONS TO MASTER.

ISSUE NUMBER
ORIGINAL ①

Contact Information

525-P.C. Tail, High Point - Tail LG.=.175(4.45)
.125" (3.18mm) Contact Spacing x .250" (6.35mm) Row Spacing

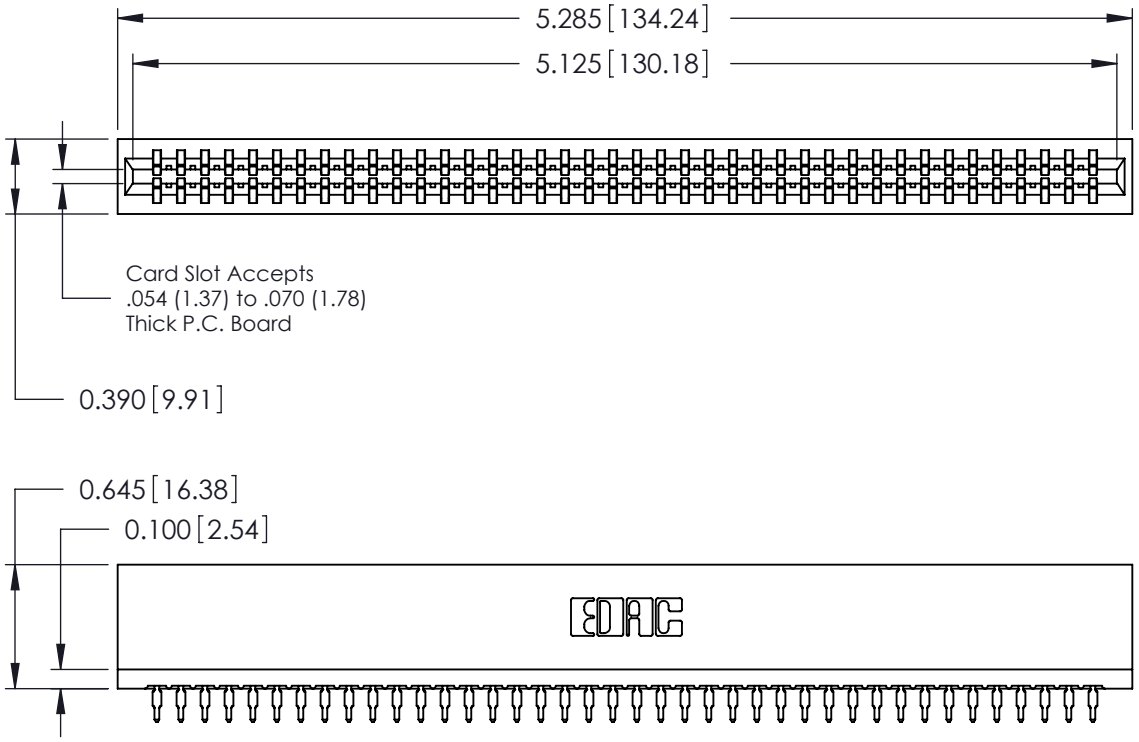

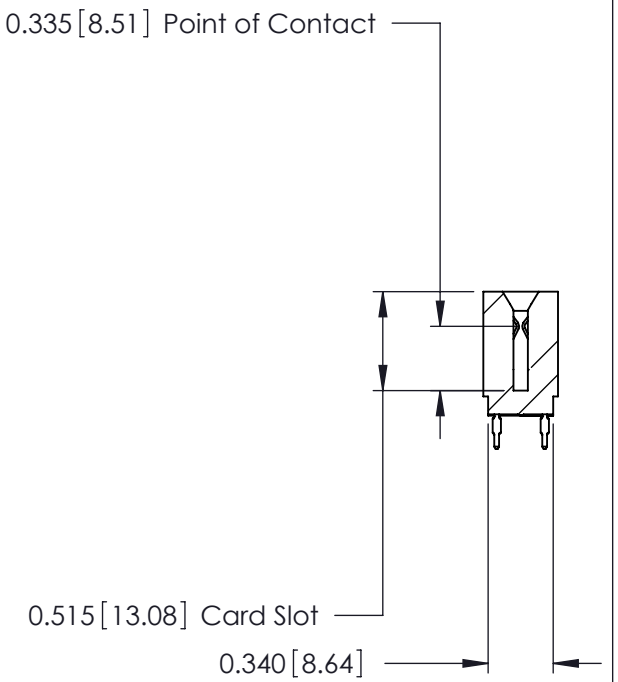

746 Series Ultra-Mate Card Edge Connector - Press Fit

Part Number: 746-080-525-201

EDAC INC
TORONTO, ONTARIO
CANADA
YOUR CONNECTION TO QUALITY & SERVICE

THESE DRAWINGS AND SPECIFICATIONS ARE THE PROPERTY OF EDAC INC.,AND SHALL NOT BE REPRODUCED,OR COPIED OR USED AS THE BASIS FOR THE MANUFACTURE OR SALE OF APPARATUS WITHOUT WRITTEN PERMISSION.

ACAD REFERENCE NO. 746-ENG MASTER		
DRAWN: J.LEE	DATE: AUG 20/09	
CHECKED:	DATE:	
SCALE:	SHEET 1 OF 1	
DRAWING NUMBER 746-ENG MASTER	ISSUE 1	