This document was generated on 05/28/2010

PLEASE CHECK WWW.MOLEX.COM FOR LATEST PART INFORMATION

Part Number: 0743370037

Status: Active

Description: 0.80mm (.031") Pitch Ultra+™ VHDCI Wire-to-Board Receptacle, Stacked, Right Angle, with Enhanced Shield, Version 1 Footprint, 136 Circuits

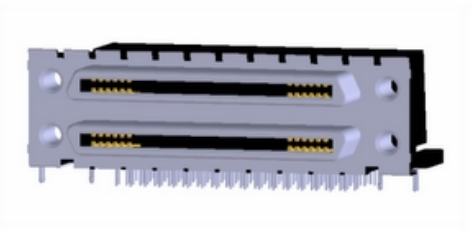

Series image - Reference only

Documents:

3D Model
Test Summary (PDF)
Drawing (PDF)
Product Specification PS-71425-9999 (PDF)
RoHS Certificate of Compliance (PDF)

Agency Certification

CSA	LR19980
UL	E29179

General

Product Family	I/O Connectors
Series	74337
Application	Wire-to-Board
Comments	With Top Cover
Component Type	Receptacle
Product Name	SCSI+, VHDCI
Type	N/A

Physical

Boot Color	N/A
Circuits (Loaded)	136
Circuits (maximum)	136
Color - Resin	Black
Durability (mating cycles max)	500
Flammability	94V-0
Gender	Female
Lock to Mating Part	Yes
Material - Metal	Brass
Material - Plating Mating	Tin
Material - Plating Termination	Tin
Material - Resin	High Temperature Thermoplastic
Number of Rows	4
Orientation	Right Angle
PC Tail Length (in)	0.098 In
PC Tail Length (mm)	2.48 mm
PCB Locator	Yes
PCB Retention	Yes
PCB Thickness Recommended (in)	0.063 In
PCB Thickness Recommended (mm)	1.60 mm
Packaging Type	Tray
Panel Mount	No
Pitch - Mating Interface (in)	0.031 In
Pitch - Mating Interface (mm)	0.80 mm
Pitch - Term. Interface (in)	0.031 In
Pitch - Term. Interface (mm)	0.80 mm
Plating min: Mating (µin)	40
Plating min: Mating (µm)	1.00
Plating min: Termination (µin)	40
Plating min: Termination (µm)	1.00
Polarized to Mating Part	Yes
Polarized to PCB	Yes

EU RoHS
RoHS Compliant by Exemption
REACH SVHC
Not Reviewed
Halogen-Free Status
Not Reviewed

China RoHS

Need more information on product environmental compliance?

Email productcompliance@molex.com
For a multiple part number RoHS Certificate of Compliance, click here

Please visit the Contact Us section for any non-product compliance questions.

Search Parts in this Series
74337Series

Mates With
Ultra+™ VHDCI Plug Kit 71425

Ports	2
Surface Mount Compatible (SMC)	Yes
Temperature Range - Operating	-55°C to +85°C
Termination Interface: Style	Through Hole
Waterproof / Dustproof	No
Wire Size AWG	N/A

Electrical

Current - Maximum per Contact	0.5A
Shield Type	Full Shield
Shielded	Yes
Voltage - Maximum	30V AC (RMS)/DC

Solder Process Data

Duration at Max. Process Temperature (seconds)	40
Lead-free Process Capability	Wave Capable (TH only)
Max. Cycles at Max. Process Temperature	3
Process Temperature max. C	245

Material Info

Reference - Drawing Numbers

Packaging Specification	PK-74337-001
Product Specification	PS-71425-9999
Sales Drawing	SD-74337-014

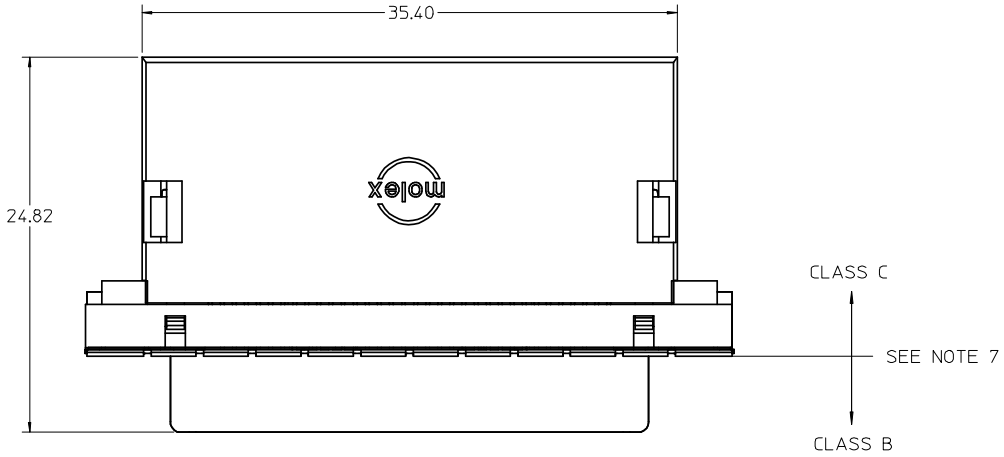

NOTES:

1. MATERIALS:
   HOUSING, COVER, AND TAIL ALIGNER: HIGH TEMPERATURE THERMOPLASTIC, UL94, V-0 RATED, COLOR: BLACK
   TERMINAL: PHOSPHOR BRONZE ALLOY
   BRACKET: BRASS
   SHELL: STEEL
   INSERT: BRASS
2. FINISHES:
   TERMINAL: 0.05-0.25 MICROMETERS GOLD FLASH IN CRITICAL AREA OVER 0.75 MICROMETERS MINIMUM PALLADIUM NICKEL IN CRITICAL AREA, 1.87 MICROMETERS MINIMUM TIN IN SOLDER TAIL AREA, ALL OVER NICKEL.
   BRACKET: 5.0 MICROMETERS MINIMUM BRIGHT TIN.
   SHIELD: 3.81 MICROMETERS MINIMUM BRIGHT TIN OVER 1.27 MICROMETERS MINIMUM NICKEL OVER COPPER FLASH (OPTIONAL).
   INSERT: 2.54 MICROMETERS MINIMUM NICKEL.
3. PRODUCT SPECIFICATION: PS-71425-9999.
4. PACKAGING SPECIFICATION: TRAY PACK PER PK-74337-001.
5. APPLICABLE STANDARDS: EIA-700A0AF AND SFF-8441.
6. DATE CODE: YR/WK PER EIA-476-A.
7. PRODUCT COMPLIES WITH COSMETIC SPECIFICATION PS-45499-002. SEE FIGURE AT LEFT FOR SURFACE CLASSIFICATIONS.
8. TORQUE TO INSTALL SCREWLOCKS INTO THREADED INSERTS: 0.34 Nm MAXIMUM.

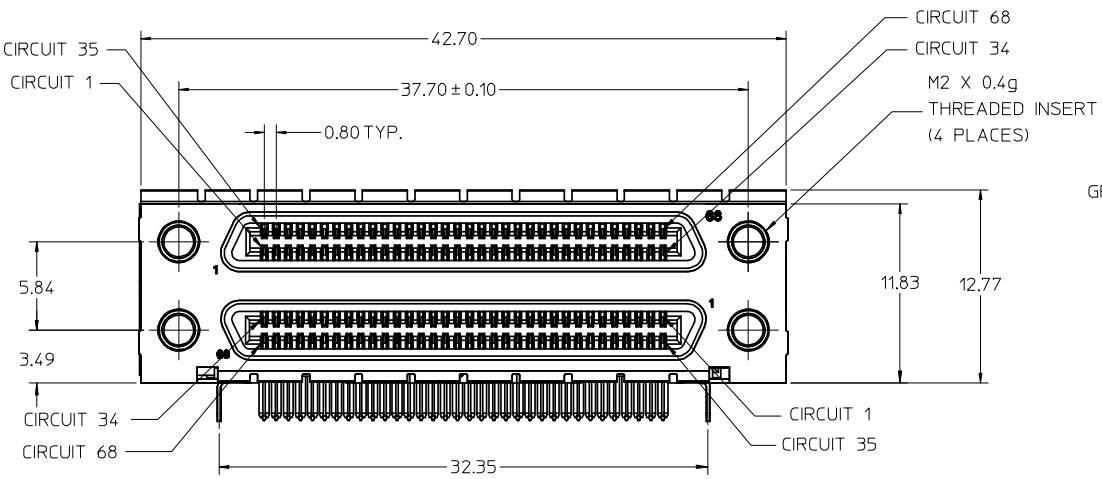

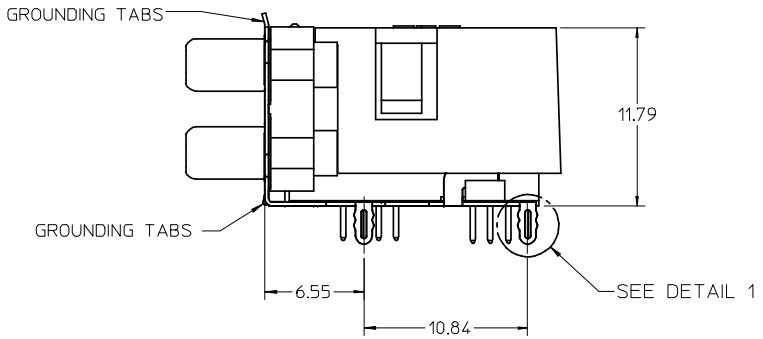

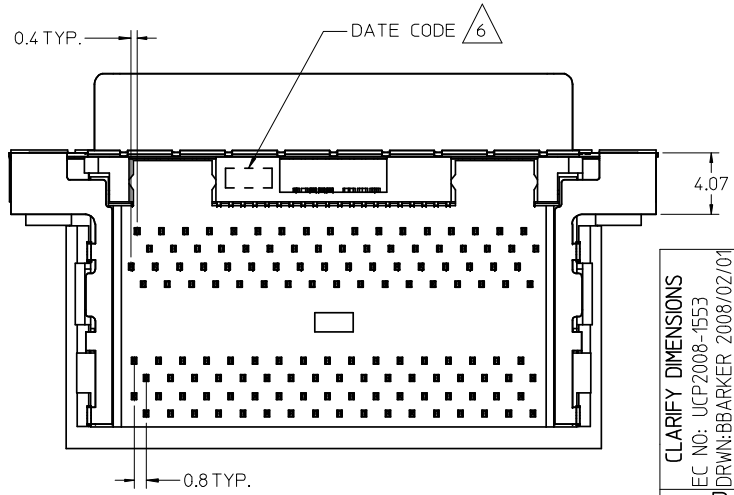

PRESS FIT FORKLOCK SHOWN
(VERSION 4)

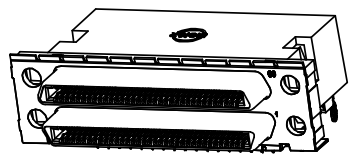

WITH COVER OPTION

CLARIFY DIMENSIONS
EC NO: UCP2008-1553
DRWN:BBARKER 2008/02/01
CH'KD:DMORGAN 2008/02/07
APPR: SMILLER 2008/02/08
DESCRIPTION
REV
R

QUALITY SYMBOLS
▼ = 0
▽C = 0

GENERAL TOLERANCES (UNLESS SPECIFIED)

	mm	INCH
4 PLACES	± ---	± ---
3 PLACES	± ---	± ---
2 PLACES	± 0.13	± ---
1 PLACE	± 0.25	± ---
ANGULAR ± 1 °		

DRAFT WHERE APPLICABLE
MUST REMAIN WITHIN DIMENSIONS

SCALE	3:1
DESIGN UNITS	METRIC
THIRD ANGLE PROJECTION	REVISE ON CAD ONLY
DIMENSION STYLE	MM ONLY
TITLE	VHDCI STACKED ASSEMBLY
DRAWN BY / DATE	SSAMPSON 05.08.2001
CHECKED BY / DATE	MBANAKIS 05.08.2001
APPROVED BY / DATE	MBANAKIS 05.08.2001
MOLEX INCORPORATED	
MATERIAL NO.	SEE TABLE
DOCUMENT NO.	SD-74337-014
SHEET NO.	1 OF 4

THIS DRAWING CONTAINS INFORMATION THAT IS PROPRIETARY TO MOLEX INCORPORATED AND SHOULD NOT BE USED WITHOUT WRITTEN PERMISSION

C

74337

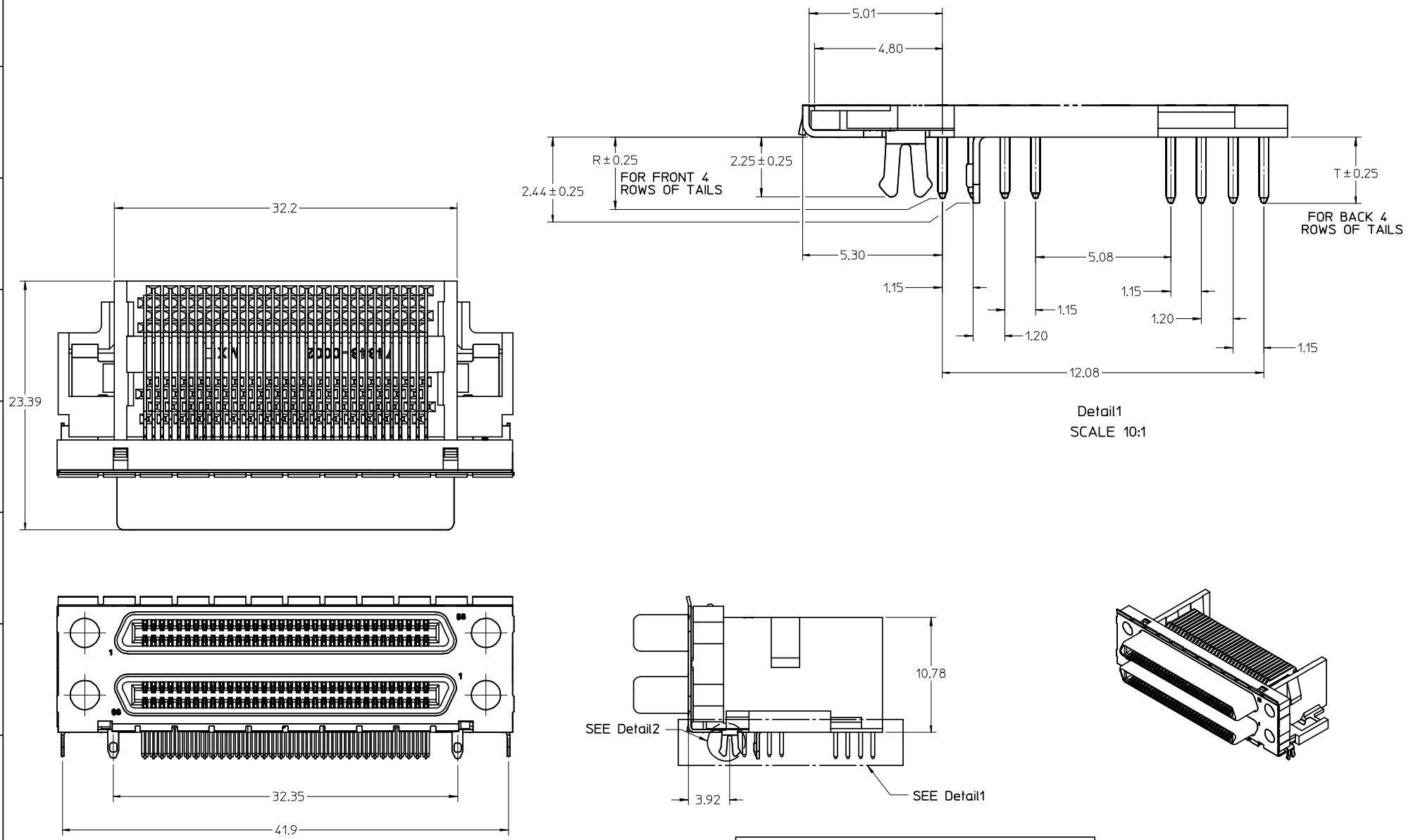

WITHOUT COVER OPTION

CLARIFY DIMENSIONS EC NO: UCP2008-1553 DRWN:BBARKER 2008/02/01 CH'KD:DMORGAN 2008/02/07 APPR:SMILLER 2008/02/08	QUALITY SYMBOLS ▼ = 0 C = 0	GENERAL TOLERANCES (UNLESS SPECIFIED) mm / INCH 4 PLACES ± --- ± --- 3 PLACES ± --- ± --- 2 PLACES ± 0.13 ± --- 1 PLACE ± 0.25 ± --- ANGULAR ± 1 ° DRAFT WHERE APPLICABLE MUST REMAIN WITHIN DIMENSIONS	SCALE 4:1 DESIGN UNITS METRIC DIMENSION STYLE MM ONLY DRAWN BY SSAMPSON DATE 05.08.2001 CHECKED BY MBANAKIS DATE 05.08.2001 APPROVED BY MBANAKIS DATE 05.08.2001
REV R			

THIRD ANGLE PROJECTION | REVISE ON CAD ONLY

TITLE: VHDCI STACKED ASSEMBLY

molex MOLEX INCORPORATED

MATERIAL NO. SEE TABLE | DOCUMENT NO. SD-74337-014 | SHEET NO. 2 OF 4

THIS DRAWING CONTAINS INFORMATION THAT IS PROPRIETARY TO MOLEX INCORPORATED AND SHOULD NOT BE USED WITHOUT WRITTEN PERMISSION

C

tb_frame_C-B1
rev. B1 2000/08/01

VERSION 1 PART NUMBERS

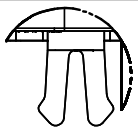

DETAIL 2
(BACKGROUND OMITTED FOR CLARITY)

BOARD RETENTION: SNAP FIT

PCB THICKNESS	COVER	R DIM.	T DIM.	INCLUDES LOOSE PACKED SCREWLOCKS 71433-0002 SEE DRAWING SD-71433-005	GROUNDING TABS	PART NUMBER
1.60±0.16	YES	2.30	2.48	NO	YES	74337-0011
1.60±0.16	YES	2.08		NO	YES	74337-0012
1.60±0.16	NO	2.30	2.48	NO	YES	74337-0015
1.60±0.16	NO	2.08		NO	YES	74337-0016
1.60±0.16	YES	2.30	2.48	YES	YES	74337-0037
1.60±0.16	YES	2.08		YES	YES	74337-0038
1.60±0.16	NO	2.30	2.48	YES	YES	74337-0039
1.60±0.16	NO	2.08		YES	YES	74337-0040
2.36±0.16	YES	3.44	3.62	NO	YES	74337-0070
2.36±0.16	NO	3.44	3.62	NO	YES	74337-0071
2.36±0.16	YES	3.44	3.62	YES	YES	74337-0072
2.36±0.16	NO	3.44	3.62	YES	YES	74337-0073
1.60±0.16	YES	2.08		INSTALLED ON PART	YES	74337-1038

VERSION 4 PART NUMBERS

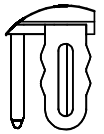

DETAIL 1
(BACKGROUND OMITTED FOR CLARITY)

BOARD RETENTION: PRESS FIT

PCB THICKNESS	COVER	R DIM.	T DIM.	INCLUDES LOOSE PACKED SCREWLOCKS 71433-0002 SEE DRAWING SD-71433-005	GROUNDING TABS	PART NUMBER
1.60±0.16	YES	2.30	2.48	NO	YES	74337-0050
1.60±0.16	YES	2.08		NO	NO	74337-0051
1.60±0.16	NO	2.30	2.48	NO	YES	74337-0060
1.60±0.16	NO	2.08		NO	YES	74337-0061
1.60±0.16	YES	2.08		NO	YES	74337-0066
1.60±0.16	YES	2.30	2.48	YES	YES	74337-0053
1.60±0.16	YES	2.08		YES	YES	74337-0054
1.60±0.16	NO	2.30	2.48	YES	YES	74337-0063
1.60±0.16	NO	2.08		YES	YES	74337-0064
2.36±0.16	YES	3.44	3.62	NO	YES	74337-0052
2.36±0.16	NO	3.44	3.62	NO	YES	74337-0062
2.36±0.16	YES	3.44	3.62	YES	YES	74337-0055
2.36±0.16	NO	3.44	3.62	YES	YES	74337-0065
1.60±0.16	YES	2.08		INSTALLED ON PART	YES	74337-1054

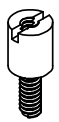

OPTIONAL SCREWLOCK
71433-0002

CLARIFY DIMENSIONS
EC NO: UCP2008-1553
DRWN:BBARKER 2008/02/01
CH'KD:DMORGAN 2008/02/07
APPR: SMILLER 2008/02/08
DESCRIPTION
R
REV

QUALITY SYMBOLS
▼ - 0
Ⓒ - 0

GENERAL TOLERANCES (UNLESS SPECIFIED)

	mm	INCH
4 PLACES	± ---	± ---
3 PLACES	± ---	± ---
2 PLACES	± 0.13	± ---
1 PLACE	± 0.25	± ---
ANGULAR ± 1 °		

DRAFT WHERE APPLICABLE
MUST REMAIN
WITHIN DIMENSIONS

SCALE	DESIGN UNITS
3:1	METRIC

THIRD ANGLE PROJECTION
REVISE ON CAD ONLY

DIMENSION STYLE: MM ONLY

TITLE: VHDCI STACKED ASSEMBLY

DRAWN BY	DATE
SSAMPSON	05.08.2001
CHECKED BY	DATE
MBANAKIS	05.08.2001
APPROVED BY	DATE
MBANAKIS	05.08.2001

MOLEX INCORPORATED

MATERIAL NO.	DOCUMENT NO.	SHEET NO.
SEE TABLE	SD-74337-014	3 OF 4

THIS DRAWING CONTAINS INFORMATION THAT IS PROPRIETARY TO MOLEX INCORPORATED AND SHOULD NOT BE USED WITHOUT WRITTEN PERMISSION

C

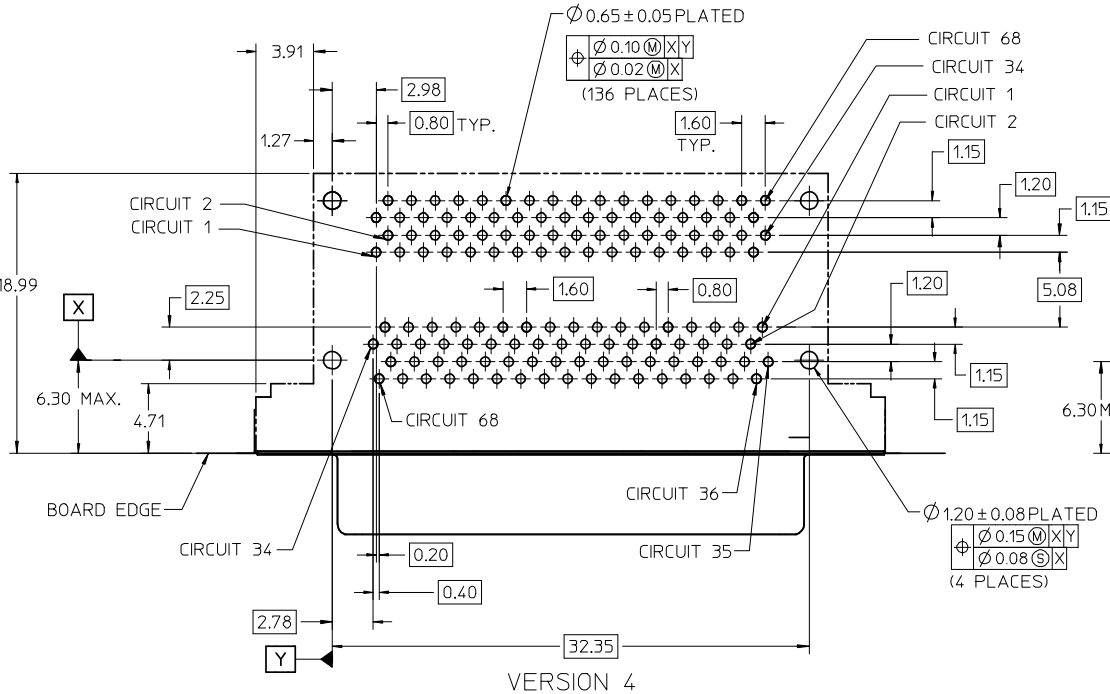

VERSION 4
RECOMMENDED PCB LAYOUT
COMPONENT SIDE SHOWN

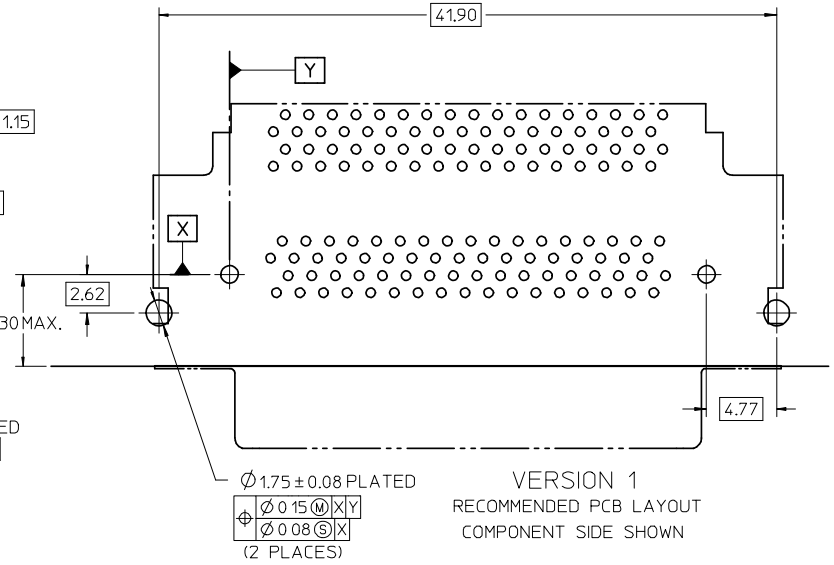

VERSION 1
RECOMMENDED PCB LAYOUT
COMPONENT SIDE SHOWN

SAME AS VERSION 4 EXCEPT AS SHOWN

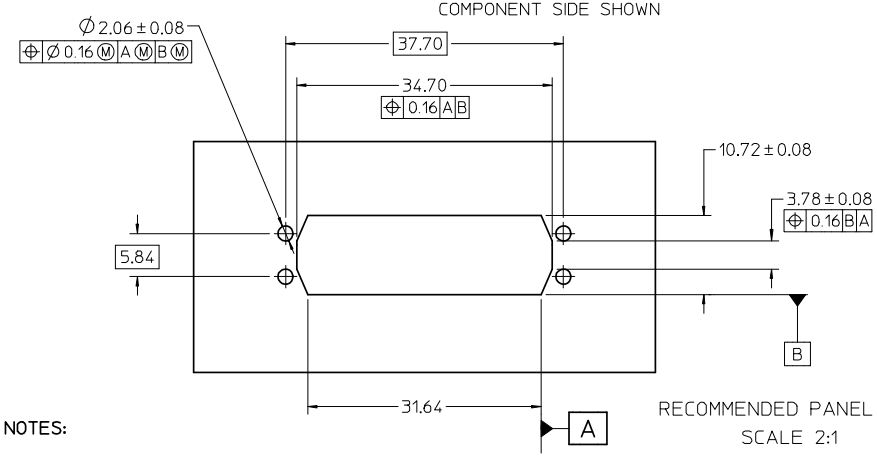

RECOMMENDED PANEL OPENING
SCALE 2:1

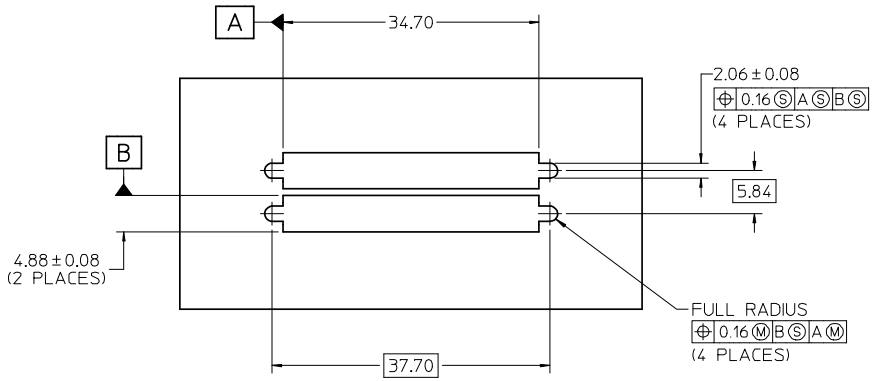

PANEL OPENING PER SFF-8441 SPECIFICATION
SCALE 2:1

NOTES:

1. FOR FULL MATE WITH PLUG, PANEL THICKNESS SHOULD NOT EXCEED 1.0mm.

   FUNCTIONAL MATING WITH MOLEX PLUG CAN STILL BE MAINTAINED WITH PANELS AS THICK AS 2.5mm (BUT PLUG AND RECEPTACLE WILL NOT BE FULLY MATED).

2. GUIDELINES FOR CHOOSING A MOLEX SCREWLOCK:

PANEL THICKNESS	RECOMMENDED SCREWLOCK
LESS THAN OR EQUAL TO 1.00 MM	71433-0002
1.01 TO 2.15 MM	71433-0010

CLARIFY DIMENSIONS
EC NO: UCP2008-1553
DRWN:BBARKER 2008/02/01
CH'KD:DMORGAN 2008/02/07
APPR:SMILLER 2008/02/08
DESCRIPTION
REV
R

QUALITY SYMBOLS
▼ = 0
▽ = 0

GENERAL TOLERANCES (UNLESS SPECIFIED)

	mm	INCH
4 PLACES	± ---	± ---
3 PLACES	± ---	± ---
2 PLACES	± 0.13	± ---
1 PLACE	± 0.25	± ---
ANGULAR ± 1 °		

DRAFT WHERE APPLICABLE
MUST REMAIN WITHIN DIMENSIONS

SCALE	3:1
DESIGN UNITS	METRIC
	THIRD ANGLE PROJECTION
	REVISE ON CAD ONLY
DIMENSION STYLE	MM ONLY
TITLE	VHDCI STACKED ASSEMBLY
DRAWN BY / DATE	SSAMPSON 05.08.2001
CHECKED BY / DATE	MBANAKIS 05.08.2001
	MOLEX INCORPORATED
APPROVED BY / DATE	MBANAKIS 05.08.2001
MATERIAL NO.	SEE TABLE
DOCUMENT NO.	SD-74337-014
SHEET NO.	4 OF 4

THIS DRAWING CONTAINS INFORMATION THAT IS PROPRIETARY TO MOLEX INCORPORATED AND SHOULD NOT BE USED WITHOUT WRITTEN PERMISSION

C