PRODUCT DATASHEET

Type	Size	Output	MYRRA P/N
FLYBACK	**ETD39**	**5 + 12 V - 5 + 12 V**	**74060**

Product designation

FLYBACK TRANSFORMER – ETD39

MECHANICAL CHARACTERISTICS - PINOUT

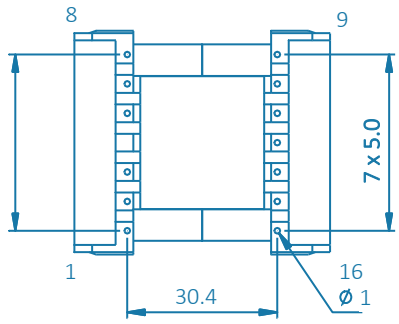

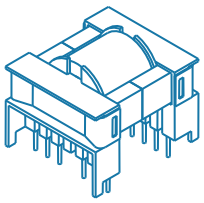

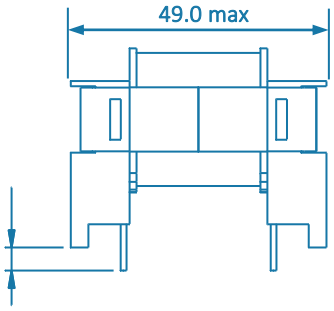

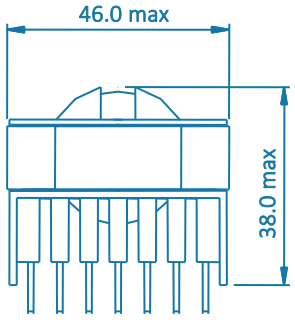

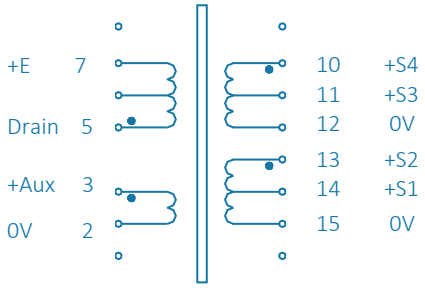

Pin 4 removed
Recommended PCB drilling diameter : 1.5 mm

ELECTRICAL CHARACTERISTICS

MYRRA P/N	Maximum output power	Windings					
			Pins	Turns	Voltage	Maximum current	Inductance (+/- 10 %)
74060	140 w	P	5 - 7	36	85 ~ 265 V_{rms}	4.0 A_{pk}	0.44 mH
		Aux.	3 - 2	4	7.0 ~ 14.0 V_{DC}	0.5 A_{DC}	
		S1	14 - 15	2	3.3 ~ 6.5 V_{DC}	5.0 A_{DC}	
		S2	13 - 15	5	8.5 ~ 17.0 V_{DC}	5.0 A_{DC}	
		S3	11 - 12	2	3.3 ~ 6.5 V_{DC}	5.0 A_{DC}	
		S4	10 - 12	5	8.5 ~ 17.0 V_{DC}	5.0 A_{DC}	

Typical uses	Outputs	Connections of the windings
	5.0 V - 9.5 A + 12.0 V - 7.0 A	S1 + S2 and S3 + S4 in parallel
	5.0 + 12.0 + 17.0 + 24.0 V	S1 to S4 in series (pins 10 and 11 linked)

REMARKS

RoHS compliant

UL94 V-0 materials

Class B

Ambient temperature: 50 °C max.

P / S :

Creepage distances ≥ 8.0 mm
4.0 kV dielectric test
Construction conforms to IEC60950, IEC60335 and IEC61558-2-16 for reinforced isolation