This document was generated on 05/14/2010

PLEASE CHECK WWW.MOLEX.COM FOR LATEST PART INFORMATION

Part Number: 0738101000
Status: Active
Overview: hdm
Description: 2.00mm (.079") Pitch HDM® Board-to-Board Midplane Header, Vertical SMC, Press-Fit, Double End Option, Slide On Housing, 144 Circuits

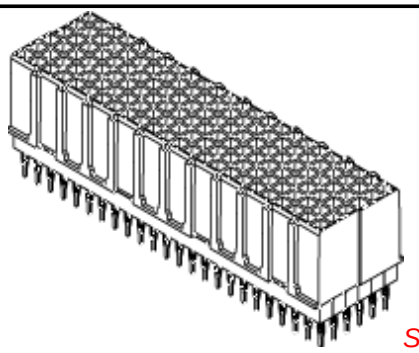

Series image - Reference only

Documents:
Drawing (PDF)
RoHS Certificate of Compliance (PDF)

Agency Certification

CSA	LR19980
UL	E29179

General

Product Family	Backplane Connectors
Series	73810
Application	Midplane
Component Type	PCB Header
Overview	hdm
Product Name	HDM®
Style	N/A

Physical

Circuits (Loaded)	N/A
Circuits (maximum)	144
Color - Resin	Black
Durability (mating cycles max)	250
First Mate / Last Break	No
Flammability	94V-0
Guide to Mating Part	Yes
Keying to Mating Part	Yes
Material - Resin	High Temperature Thermoplastic
Number of Columns	24
Number of Pairs	Open Pin Field
Number of Rows	6
Orientation	Vertical
PC Tail Length (in)	0.000 In
PC Tail Length (mm)	0.00 mm
PCB Locator	No
PCB Retention	None
Packaging Type	Tube
Pitch - Mating Interface (in)	0.079 In
Pitch - Mating Interface (mm)	2.00 mm
Polarized to PCB	N/A
Surface Mount Compatible (SMC)	Yes
Temperature Range - Operating	-55°C to +105°C

Electrical

Current - Maximum per Contact	1A
Data Rate	1.0 Gbps
Real Signals (per 25mm)	0
Voltage - Maximum	250V AC

Solder Process Data

Lead-free Process Capability	Reflow Capable (SMT only)
Process Temperature max. C	260

EU RoHS
ELV and RoHS Compliant
REACH SVHC
Contains SVHC: No
Halogen-Free Status
Halogen-Free

China RoHS

Need more information on product environmental compliance?

Email productcompliance@molex.com
For a multiple part number RoHS Certificate of Compliance, click here

Please visit the Contact Us section for any non-product compliance questions.

Search Parts in this Series
73810Series

Mates With
73632 HDM PLUS® Board-to-Board Daughtercard Receptacle. 73780 HDM® Board-to-Board Daughtercard Receptacle

Material Info

Reference - Drawing Numbers

Sales Drawing	SD-73810-001

HDM and High Density Metric are trademarks of Amphenol Corporation

This document was generated on 05/14/2010

PLEASE CHECK WWW.MOLEX.COM FOR LATEST PART INFORMATION

NOTES:

1. HOUSING MATERIALS: LIQUID CRYSTAL POLYMER (LCP), GLASS-FILLED, UL94V-0, COLOR: BLACK.
2. THIS PART CONFORMS TO MOLEX PRODUCT SPECIFICATION PS-73670-9999.
3. SEE DRAWINGS SD-73800-001, SD-73801-001, AND SD-73802-001 FOR DIMENSIONAL INFORMATION.
4. PARTS MARKED WITH PART NUMBER AND DATE CODE, ON EITHER SIDE, APPROXIMATELY WHERE SHOWN.
5. PARTS PACKAGED PER PK-70873-0818.

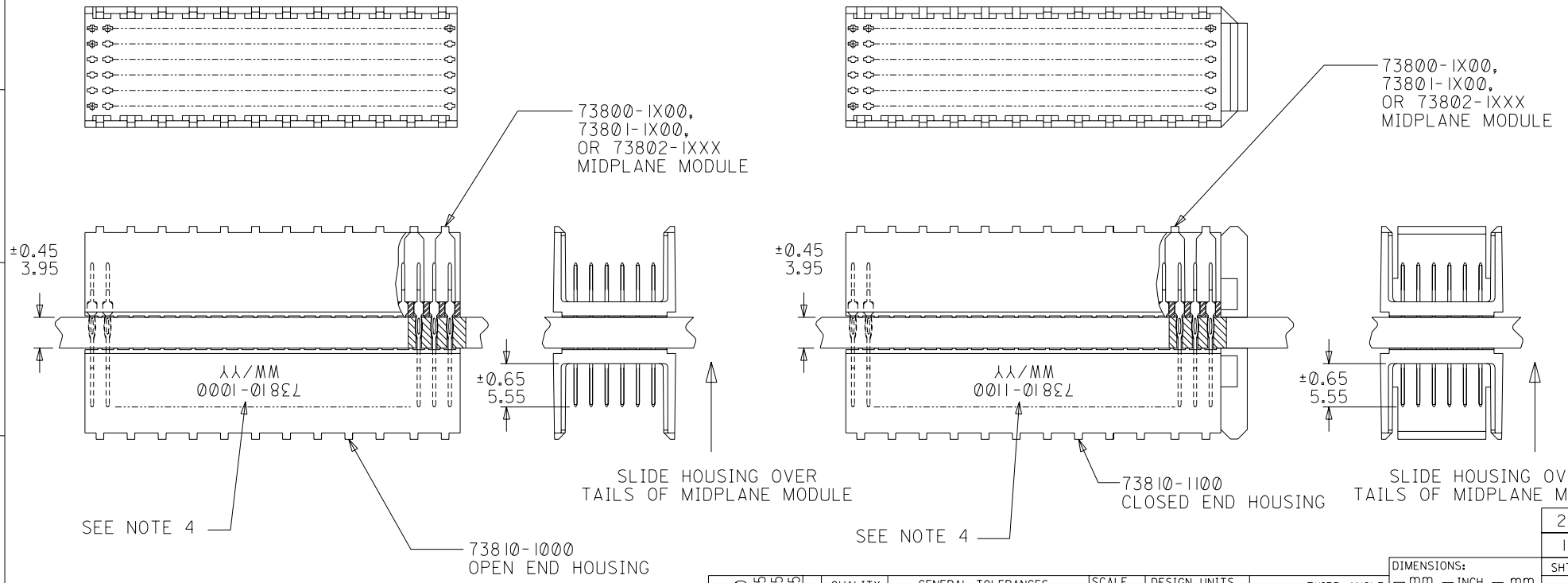

2	B
1	D
SHT	REV

REVISED
EC NO. UCP2003-2260
DRWN: THOMAS 03/04/25
CH'K: BINGHAM 03/04/25
APPR: REED 03/04/25
DESCRIPTION

D
REV

QUALITY SYMBOLS
MAJOR ▼ =0
CRITICAL (C) =0

GENERAL TOLERANCES: (UNLESS SPECIFIED)

	mm	INCH
4 PLACES	±0.	±.
3 PLACES	±0.	±.
2 PLACES	±0.05	±.
1 PLACE	±0.10	±.
ANGULAR: ± 1/2°		

DRAFT WHERE APPLICABLE MUST REMAIN WITHIN DIMENSIONS

SCALE 2 : 1
DESIGN UNITS ☒mm ☐INCH
THIRD ANGLE PROJECTION
DIMENSIONS: ☐mm/INCH ☐INCH/mm ☒mm ONLY
REVISE ON CAD ONLY

DRAWN BY & DATE: JBINGHAM 97/06/19
CHECKED BY & DATE: SREED 97/06/19
APPROVED BY & DATE: CBIXLER 97/06/19

TITLE: SALES ASSEMBLY, HDM
DOUBLE-END MIDPLANE, 144 POS.
SLIDE-ON HOUSING

molex MOLEX INCORPORATED

CAD FILENAME	MATERIAL NO.	DRAWING NO.	SHEET NO.
S73810X1.DGN	SEE CHART	SD-73810-001	1 OF 2

THIS DRAWING CONTAINS INFORMATION THAT IS PROPRIETARY TO MOLEX INCORPORATED AND SHOULD NOT BE USED WITHOUT WRITTEN PERMISSION.

SIZE B

MATERIAL NUMBER ASSIGNMENT

73810- * * * *

1 = 144-CIRCUIT

0 = OPEN END VERSION
1 = CLOSED END VERSION
2 = POLAR/GUIDE VERSION

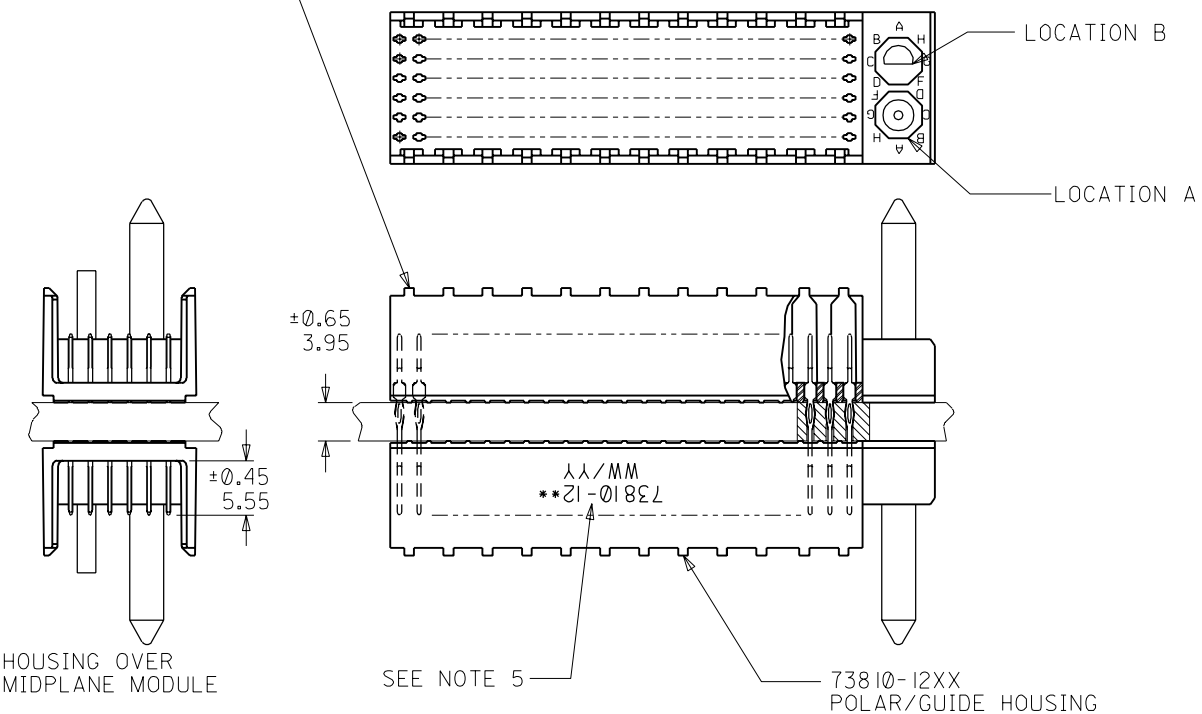

NUMBER	GUIDE POST LOCATION	POLAR KEY POSITION
00	N/A	N/A
01	B	A
02	A	
03	B	B
04	A	
05	B	C
06	A	
07	B	D
08	A	
09	B	E
10	A	
11	B	F
12	A	
13	B	G
14	A	
15	B	H
16	A	
17	B	N/A
18	A	

SEE SHEET 1
EC NO. UDT20000-0443
DRWN: JBINGHAM 99/11/04
CHK: SREED 99/11/04
APPR: CBIXLER 99/11/04
DESCRIPTION
B
REV

QUALITY SYMBOLS
MAJOR ▼ = 0
CRITICAL (C) = 0

GENERAL TOLERANCES: (UNLESS SPECIFIED)

	mm	INCH
4 PLACES	±0.	±.
3 PLACES	±0.	±.
2 PLACES	±0.05	±.
1 PLACE	±0.10	±.
ANGULAR: ± 1/2°		

DRAFT WHERE APPLICABLE MUST REMAIN WITHIN DIMENSIONS

SCALE 2 : 1
DESIGN UNITS ☒mm ☐INCH
THIRD ANGLE PROJECTION
DIMENSIONS: ☐mm/INCH ☐INCH/mm ☒mm ONLY
SHT | REV
REVISE ON CAD ONLY

DRAWN BY & DATE JBINGHAM 97/06/19
CHECKED BY & DATE SREED 97/06/19
APPROVED BY & DATE CBIXLER 97/06/19

TITLE: SALES ASSEMBLY, HDM
DOUBLE-END MIDPLANE, 144 POS.
SLIDE-ON HOUSING

molex MOLEX INCORPORATED

CAD FILENAME S73810X2.DGN
MATERIAL NO. SEE CHART
DRAWING NO. SD-73810-001
SHEET NO. 2
SIZE B

THIS DRAWING CONTAINS INFORMATION THAT IS PROPRIETARY TO MOLEX INCORPORATED AND SHOULD NOT BE USED WITHOUT WRITTEN PERMISSION.