Pomona ELECTRONICS

Technical Data Sheet

# Model 73061

## BNC Right-Angle Plug, 50 Ohm, Crimp Type, RG58, 141

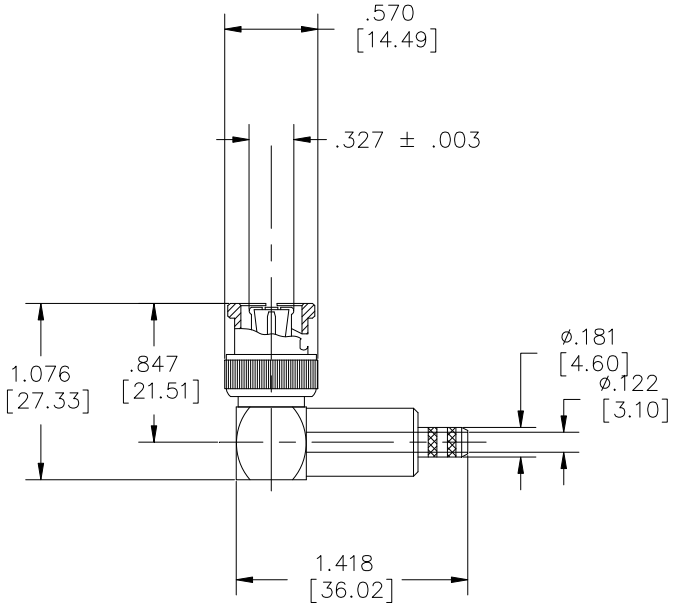


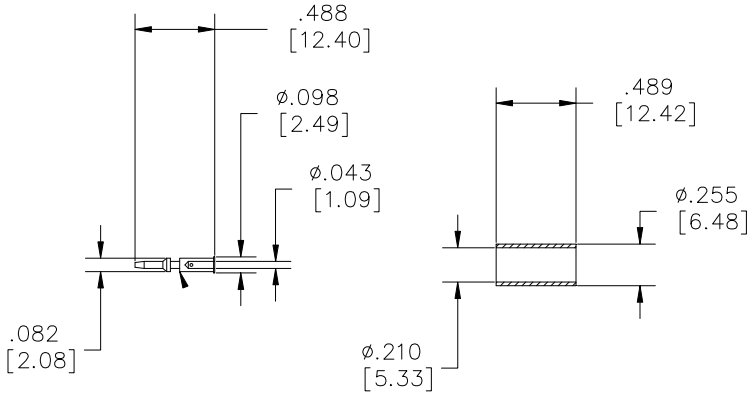




*Model 73061*
*BNC Right-Angle Plug, 50 Ohm, Crimp Type, RG58, 141*

## Features

- DC – 4GHz bandwidth.
- Connectors are precision machined.
- Connector accepts cable types RG/U: 58, 141

## Materials

Center Conductor, Male: Brass, Gold Plated
Connector Body: Brass, Nickel Plated
Crimp Ferrule: Brass, Nickel Plated

## Specifications

| | |
|---|---|
| Impedance: | 50Ω |
| Frequency Range: | DC – 4GHz |
| Contact Resistance: | |
| Center Conductor: | ≤1.5 mΩ |
| Outer Conductor: | ≤0.3 mΩ |
| Insulation Reistance: | ≥ 5000 MΩ |
| Operating Voltage: | 500V |
| *For CE compliance*, do not hold in hand when voltages exceed 33 Vrms / 70 Vdc. | |
| VSWR: | ≤1.35 |
| Operating Temperature: | -65º C (-85º F) to +165º C (+329º F) |
| Number of Insertions: | 500 cycles minimum |

## Ordering Information

Model: **73061**

**USA:** Sales: 800-490-2361
Technical Support: technicalsupport@pomonatest.com
Fax: 425-446-5844
**Europe:** 31-(0) 40 2675 150 **International:** 425-446-5500
**Where to Buy:** www.pomonaelectronics.com

All dimensions are in inches. Tolerances (except noted): .xx = ±.02" (,51 mm), .xxx = ± .005" (,127 mm). All specifications are to the latest revisions. Specifications are subject to change without notice. Registered trademarks are the property of their respective companies.

Copyright © 2009 

Pomona ELECTRONICS

Technical Data Sheet

# Model 73061

## BNC Right-Angle Plug, 50 Ohm, Crimp Type, RG58, 141

### Cable Types and Crimp Die Information

| Connector Model # | Cable Groups | Crimp Die Cavity Size for Outer Ferrule |
|---|---|---|
| 73061 | RG58, 141 | .213 (5.4) |

### Cable Assembly Instructions

1. CUT CABLE END ENENLY AND PERPENDICULAR

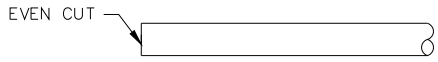


2. SLIDE FEFFULE OVER CABLE.

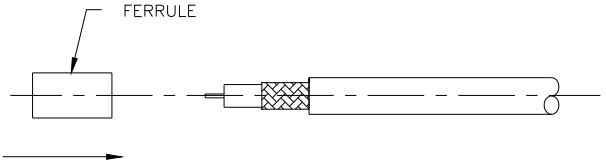


3. STRIP CABLE JACKET, BRAID AND DIELECTRIC TO SPECIFICATION LENGTHS.

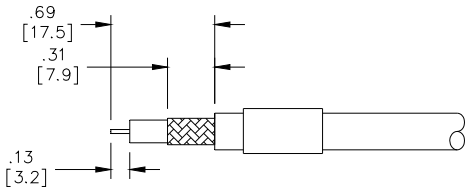


4. FLARE BRAD END SLIGHTLY.

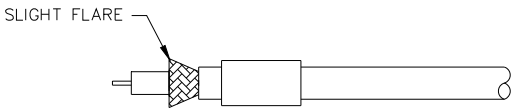


5. CRIMP CENTER CONTACT ON CENTER CODUCTOR.

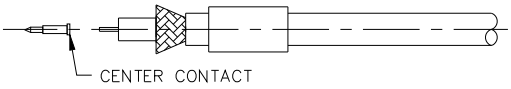


6. SLIDE CONNECTOR BODY OVER DIELECTRIC, CENTER CONTACT AND UNDER BRAID.

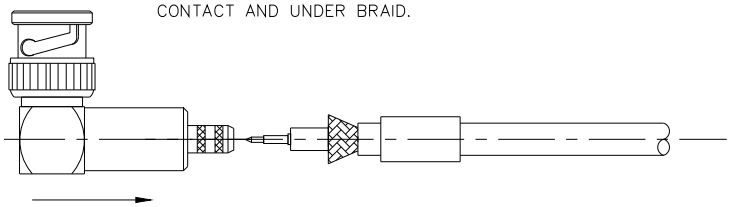

7. SLIDE FERRULE OVER BRAID AND CRIMP.

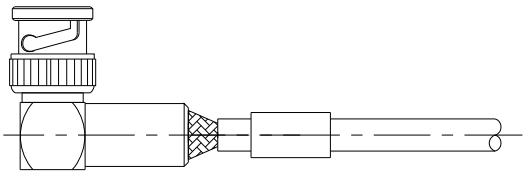

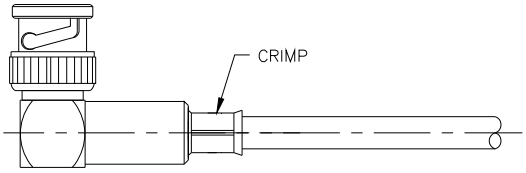


**USA:** Sales: 800-490-2361
Technical Support: technicalsupport@pomonatest.com
Fax: 425-446-5844
**Europe:** 31-(0) 40 2675 150 **International:** 425-446-5500
**Where to Buy:** www.pomonaelectronics.com

All dimensions are in inches. Tolerances (except noted): .xx = ±.02" (,51 mm), .xxx = ± .005" (,127 mm). All specifications are to the latest revisions. Specifications are subject to change without notice. Registered trademarks are the property of their respective companies.

Copyright © 2009 