Pomona ELECTRONICS

Technical Data Sheet

Model 7287
XLR (F) / Triple Binding Post



Model 7287 XLR (F) / Triple Binding Post

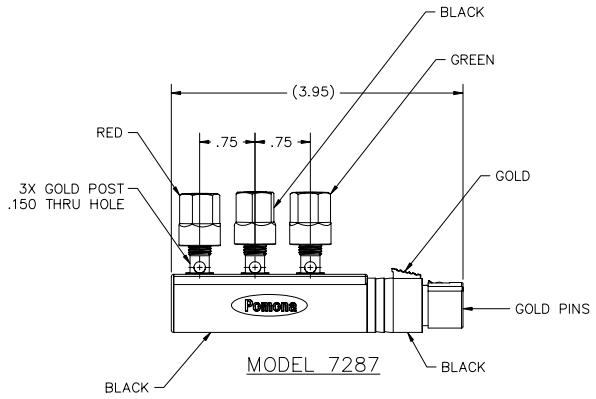

Features

- 5-way binding posts accept banana plugs vertically or horizontally, dual or triple banana plugs vertically or horizontally, bare wire via through-holes, alligator clips or spade lugs.
- XLR jack enables connection to audio cable links or broadcast system panels.
- Gold plated contacts and binding posts for excellent conductivity.
- ¾" Spacing between banana jacks allows dual or triple banana plug connections.
- Cross holes have large 3.8 mm (0.150") diameter for easy wire access.
- Rugged body exterior.

Connection Schematic

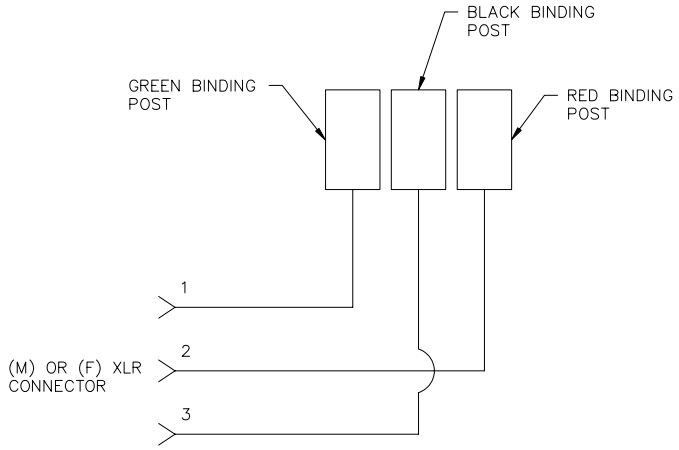

Materials

- Adapter body is made of rugged ABS.
- Binding posts: gold plated brass. Nylon 6 hex nuts.
- XLR Body: Die cast zinc.
- XLR female center contacts: gold plated brass.

Specifications

- Voltage: 33 Vrms / 70 Vdc

Ordering Information

Model: 7287, XLR (F) / Triple Binding Post

USA: Sales: 800-490-2361
Technical Support: 800-241-2060 **Fax:** 888-403-3360
Europe: 31-(0) 40 2675 150 **International**: 425-446-5500
e-mail: technicalsupport@pomonatest.com
Where to Buy: www.pomonaelectronics.com

All dimensions are in inches. Tolerances (except noted): .xx = ±.02" (,51 mm), .xxx = ± .005" (,127 mm). All specifications are to the latest revisions. Specifications are subject to change without notice. Registered trademarks are the property of their respective companies.

Copyright © 2005 5/2005 2447857 D-ENG-N Rev A