Tous droits strictement reserves. Reproduction ou communication a des tiers interdite sous quelque forme que ce soit sans autorisation ecrite du proprietaire.
Propriete de c FCI. Droits de reproduction FCI.

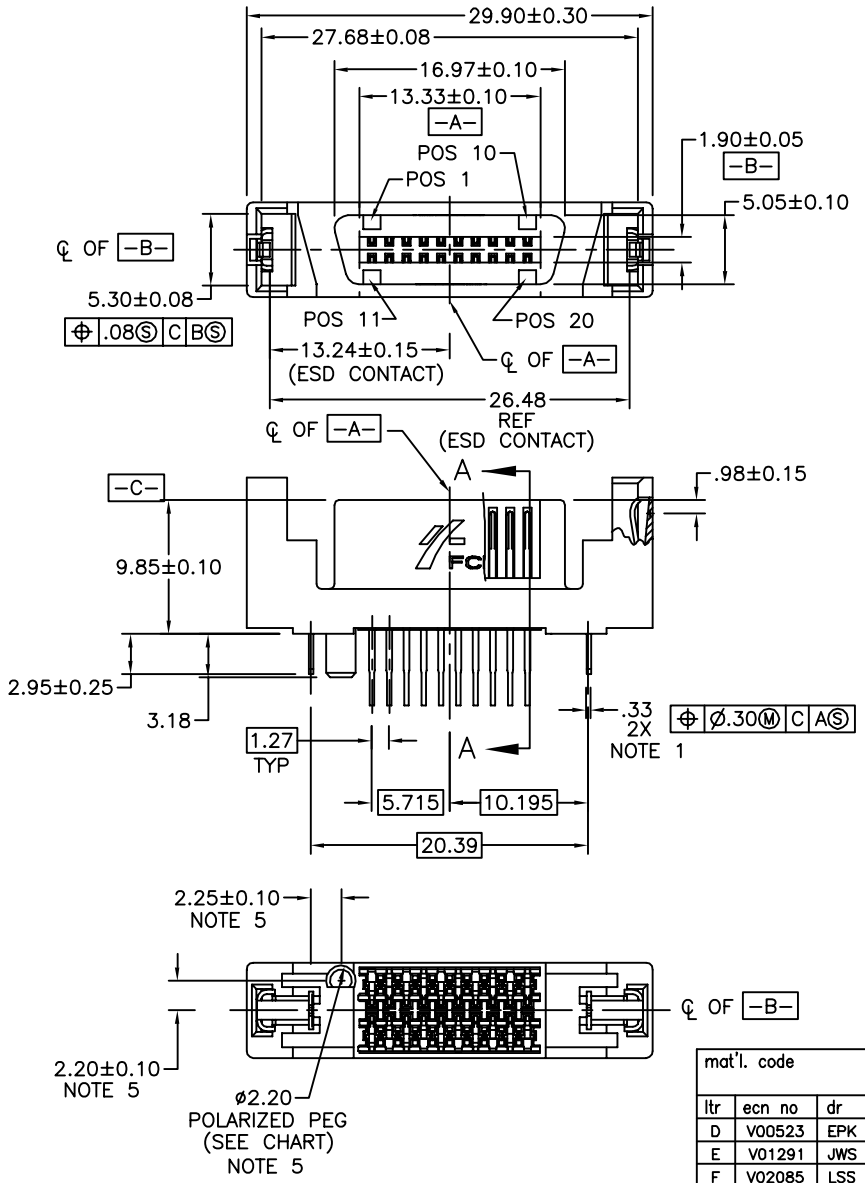

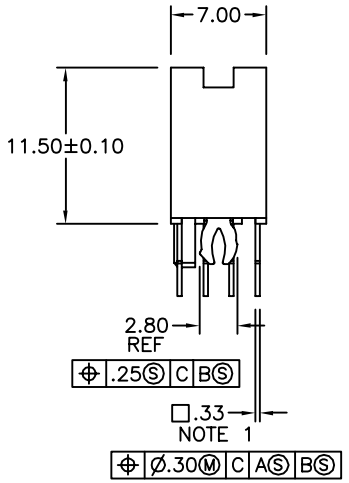

mat'l. code				tolerances unless otherwise specified			CUSTOMER COPY	CONFIDENTIAL
ltr	ecn no	dr	date	linear	.X ±.3			FCI www.fciconnect.com
D	V00523	EPK	3/23/00		.XX ±.13		projection	title: SCA-2 & FIBER CHANNEL 20 POS. RECEPT. ASS'Y
E	V01291	JWS	5/29/00		.XXX ±.051			
F	V02085	LSS	8/31/00	angles	0° ±2°			
G	V10874	LSS	2/12/01	dr	D. INGRAM	9/11/96	MM	product family: SCA-2 / code: 213
H	V20316	MEM	2/11/02	engr	A. RAISTRICK	9/11/96		size: A / dwg no: 72347 / sheet: 1 of 3
J	S05-0001	GLL	1/04/05	chr	GL LOO	1/04/05	scale: 2:1	
				appd	JOEY NG	1/04/05		

sheet index	revision	J	J
	sheet	1	2
		J	3

cage code: 22526

ACAD

All rights strictly reserved. Reproduction or issue to third parties in any form whatever is not permitted without written authority from the proprietor.
Property of FCI. Copyright FCI.

PDM: Rev:J STATUS: Released Printed: May 26, 2010

Tous droits strictement reserves. Reproduction ou communication a des tiers interdite sous quelque forme que ce soit sans autorisation ecrite du propietaire. Propriete de c FCI. Droits de reproduction FCI.

All rights strictly reserved. Reproduction or issue to third parties in any form whatever is not permitted without written authority from the proprietor. Property of FCI. Copyright FCI.

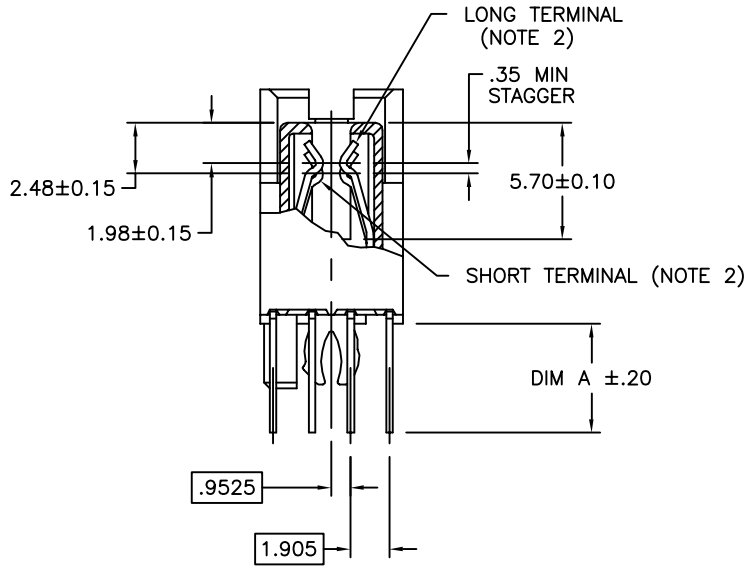

SECTION A–A

CONFIDENTIAL

mat'l. code				tolerances unless otherwise specified		CUSTOMER COPY	FCI www.fciconnect.com
ltr	ecn no	dr	date	linear	.X ±.3		
J					.XX ±.13	projection	title SCA–2 & FIBER CHANNEL 20 POS. RECEPT. ASS'Y
					.XXX ±.051		
				angles	0° ±2°		
				dr	D. INGRAM 9/11/96	MM	product family SCA–2 / code 213
				engr	A. RAISTRICK 9/11/96		size A / dwg no 72347
				chr	GL LOO 1/04/05	scale 2:1	sheet 2 of 3
				appd	JOEY NG 1/04/05		
sheet index	revision sheet						

cage code 22526

ACAD

PDM: Rev:J STATUS: Released Printed: May 26, 2010

Tous droits strictement reserves. Reproduction ou communication a des tiers interdite sous quelque forme que ce soit sans autorisation ecrite du propietaire. Propriete de c FCI. Droits de reproduction FCI.

PRODUCT NUMBER	"A" DIM	POLARIZATION PEG	PLATING	RECOMMEDED P.C. BOARD THICKNESS	PRODUCT NUMBER	PLATING	PRODUCT NUMBER	PLATING	PRODUCT NUMBER	PLATING
72347-001	2.79	YES	NOTE ④	1.57mm (0.062")	72347-101	NOTE ⑥	72347-001LF	NOTE ⑧	72347-101LF	NOTE ⑦
72347-002	2.79	NO			72347-102		72347-002LF		72347-102LF	
72347-003	3.18	YES		2.36mm (0.093")	72347-103		72347-003LF		72347-103LF	
72347-004	3.18	NO			72347-104		72347-004LF		72347-104LF	
72347-005	4.06	YES		3.18mm (0.125")	72347-105		72347-005LF		72347-105LF	
72347-006	4.06	NO			72347-106		72347-006LF		72347-106LF	

NOTE 6 NOTE 8 NOTE 7

NOTES :

① TRUE POSITION NOTES APPLY AT TERMINAL TIP.

② CONTACTS IN POSITIONS 1 THRU 10
15 & 16 ARE SHORT TERMINALS.
CONTACTS IN POSITIONS 11, 12, 13, 14,
AND 17, 18, 19, 20 ARE LONG TERMINALS.

3. RAW MATERIALS:
HOUSING: HTN, UL94V-0, COLOR: BLACK
CONTACTS: PHOSPHOR-BRONZE

④ CONTACT PLATING: 30u" (0.76um) MIN. GXT PLATING
OVER 50u" (1.27um) NICKLE MIN. UNDERPLATE IN CONTACT AREA.
100u" (2.54um) MIN. TIN-LEAD PLATING OVER 50u" (1.27um) MIN.
NICKLE UNDERPLATE IN P.C. BOARD LEG AREA. 50u" (1.27um) MIN.
NICKLE UNDERPLATE OVER REMAINING AREA.

⑤ DIMENSIONS DO NOT APPLY TO CONNECTOR STYLES WITHOUT POLARIZATION PEG. (SEE CHART)

⑥ CONTACT PLATING: 30µ" (0.76µm) MIN. GOLD PLATING OVER
50µ" (1.27µm) NICKEL MIN. UNDERPLATE IN CONTACT AREA.
100µ" (2.54µm) MIN TIN-LEAD PLATING OVER 50µ" (1.27µm) MIN.
NICKEL UNDERPLATE IN P.C. BOARD LEG AREA. 50µ" (1.27µm) MIN.
NICKEL UNDERPLATE OVER REMAINING AREA.

⑦ CONTACT PLATING: 30u" (0.76um) GOLD PLATING
OVER 50u" (1.27um) NICKLE UNDERPLATE IN CONTACT AREA.
100u" (2.54um) - 200u"(5.08um) TIN PLATING OVER
50u" (1.27um) -100u" (2.54um) NICKEL UNDERPLATE IN
P.C. BOARD LEG AREA. 50u" (1.27um) NICKEL UNDERPLATE OVER
REMAINING AREA.

⑧ CONTACT PLATING: 30u" (0.76um) GXT PLATING
OVER 50u" (1.27um) NICKLE UNDERPLATE IN CONTACT AREA.
100u" (2.54um) - 200u"(5.08um) TIN PLATING OVER
50u" (1.27um) -100u" (2.54um) NICKEL UNDERPLATE IN
P.C. BOARD LEG AREA. 50u" (1.27um) NICKEL UNDERPLATE OVER
REMAINING AREA.

⑨ THE HOUSING WILL WITHSTAND EXPOSURE TO 260°C PEAK
TEMPERATURE FOR 10 SECONDS IN A WAVE SOLDER APPLICATION
WITH A 1.57MM THICK CIRCUIT BOARD.

⑩ THIS PRODUCT MEETS EUROPEAN UNION DIRECTIVES AND OTHER
COUNTRY REGULATIONS AS DESCRIBED IN GS-22-008.

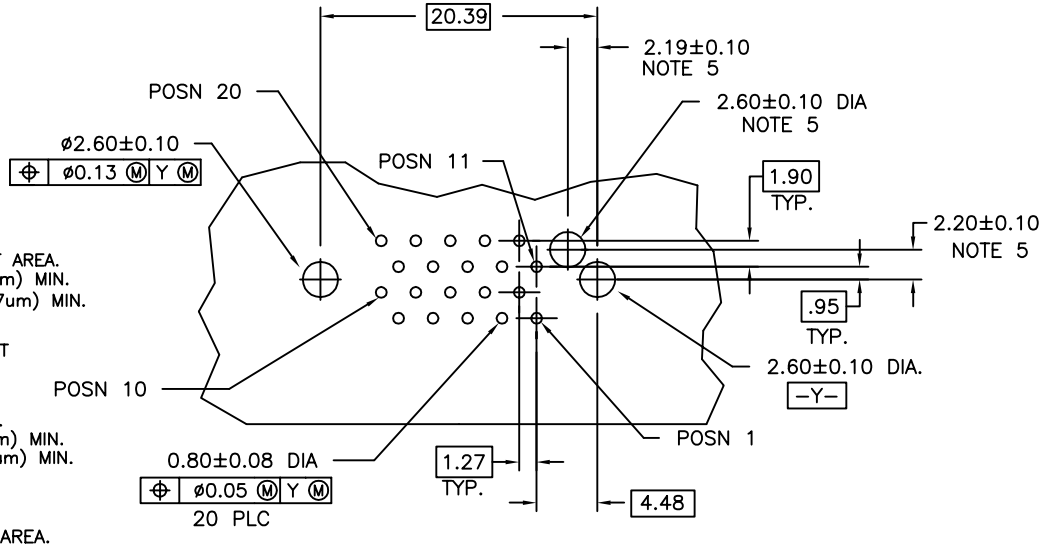

RECOMMENDED PC BOARD
MOUNTING DIMENSIONS
COMPONENT SIDE

CONFIDENTIAL

mat'l. code				tolerances unless otherwise specified			CUSTOMER COPY	FCI www.fciconnect.com
ltr	ecn no	dr	date		.X ±.3			
J				linear	.XX ±.13		projection	title SCA-2& FIBER CHANNEL 20 POS. RECEPT. ASS'Y
					.XXX ±.051			
				angles	0° ±2°			
				dr	D. INGRAM	9/11/96	MM	product family SCA-2 code 213
				engr	A. RAISTRICK	9/11/96		size A dwg no 72347 sheet 3 of 3
				chr	GL LOO	1/04/05	scale 2:1	
				appd	JOEY NG	1/04/05		
sheet index	revision sheet							cage code 22526

ACAD

All rights strictly reserved. Reproduction or issue to third parties in any form whatever is not permitted without written authority from the proprietor. Property of FCI. Copyright FCI.

PDM: Rev:J STATUS: Released Printed: May 26, 2010