71M6533/71M6533H Demo Board

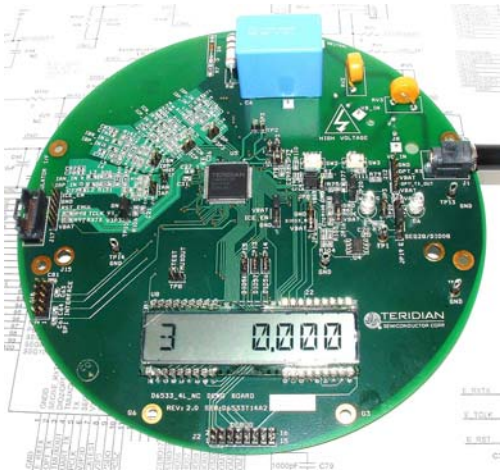

QUICK START GUIDE

Getting Started

The TERIDIAN Semiconductor Corporation (TSC) 71M6533/71M6533H Demo Board is a demonstration board for evaluating the 71M6533/71M6533H device for 3-phase electronic energy metering applications. It incorporates a 71M6533 or 71M6533H integrated circuit, peripheral circuitry such as a serial EEPROM, emulator port, and on-board power supply. The Demo Kit is shipped with a companion Debug Board that allows a connection to a PC through a RS-232 port. The Demo Board allows the evaluation of the 71M6533 or 71M6533H energy meter controller chip for measurement accuracy and overall system use.

The Demo Board is pre-loaded with Demo Code in the FLASH memory of the 71M6533/71M6533H IC. This embedded application is developed to exercise all low-level functions to directly manage the IC and the peripherals on the PCB.

Downloading of any other TSC or custom application can be done through the emulator (ICE) port or using the Flash Programmer Module (TFP-2).

Safety and ESD Notes

Connecting live voltages to the Demo Board system will result in potentially hazardous voltages on the demo board.



EXTREME CAUTION SHOULD BE TAKEN WHEN HANDLING THE DEMO BOARD ONCE IT IS CONNECTED TO LIVE VOLTAGES!

THIS DEMO SYSTEM IS ESD SENSITIVE! ESD PRECAUTIONS SHOULD BE TAKEN WHEN HANDLING THE DEMO BOARD!

Demo Board Kit Contents

- 71M6533/71M6533H Demo Board containing one 71M6533 or 71M6533H IC with pre-loaded Demo Code (circular PCB)
- Debug Board (rectangular PCB) for serial port access to the Demo Board
- 2 x 5VDC/1,000mA universal voltage wall transformer w/ 2.5mm plug (Switchcraft 712A compatible)
- Serial cable, DB9, Male/Female, 2m (Digi-Key AE1379-ND)
- CD-ROM containing the 71M6533/71M6533H Data Sheet, the Demo Board User's Guide, the Software User's Guide, the Demo Code object and source files, and other documentation and utilities

Note: The CD-ROM contains a file named readme.txt that specifies all files found on the media and their purpose.

© Copyright 2004-2008 TERIDIAN Semiconductor Corporation

Demo Board Test Setup

The file DBUM6533.pdf on the CD-ROM contains detailed instructions on how to set up and use the Demo Board. **This document should be carefully read** and understood before attempting to use the Demo Board.

The figure below shows the basic connections of the Demo Board plus Debug Board with the external equipment.

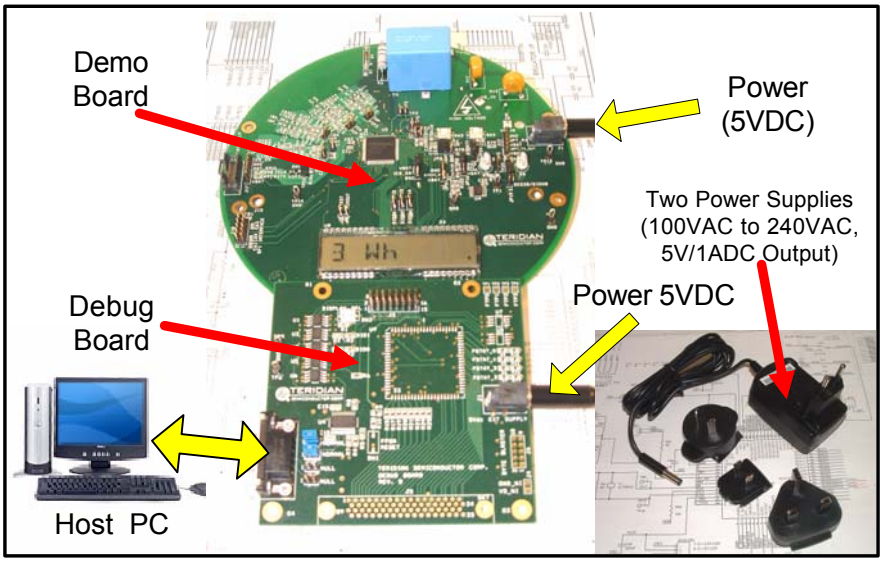

Using the Demo Board

The Demo Board is a ready-to-run meter with a Kh of 3.2 Wh/pulse (if used with a CT with a 2,000:1 winding ratio). The Demo Board has been tested on a meter calibration system, but it has not been calibrated. Please refer to the Demo Board User's Manual for further details on how to use the Demo Board.

Documentation and Software/ Utilities

All data sheets, user's manuals, user's guides, and Demo Code, source files, and libraries, including tools and utilities are in electronic form, i.e. on the CD-ROM supplied with this kit. The TERIDIAN Semiconductor web site should be checked frequently for updates.

Built-In Power Supply

The internal AC power supply of the Demo Board is designed for operation at **240VAC** and supports the current draw associated with the default clock rate established by the Demo Code. For higher clock rates or lower AC voltages, the external DC power supply (5VDC) should be used.

Support

Support is available from:

TERIDIAN Semiconductor Corporation

6440 Oak Canyon Rd., Suite 100

Irvine, CA 92618-5201

Phone: (714) 508-8800 ▪ Fax: (714) 508-8878

http://www.teridian.com/

meter.support@teridian.com

TERIDIAN Semiconductor Corporation makes no warranty for the use of its products, other than expressly contained in the Company's warranty detailed in the TERIDIAN Semiconductor Corporation standard Terms and Conditions. The company assumes no responsibility for any errors which may appear in this document, reserves the right to change devices or specifications detailed herein at any time without notice and does not make any commitment to update the information contained herein.

© Copyright 2004-2008 TERIDIAN Semiconductor Corporation