This document was generated on 04/08/2010

# PLEASE CHECK WWW.MOLEX.COM FOR LATEST PART INFORMATION

**Part Number:** 0717423003

**Status:** Active

**Description:** 1.00mm (.039") Pitch Mezzanine Receptacle, Surface Mount, Dual Row, Vertical Stacking, 84 Circuits

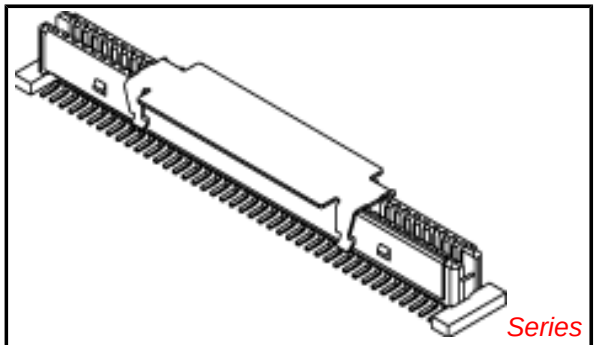

Series

*image - Reference only*

**Documents:**

3D Model
Drawing (PDF)
Product Specification PS-71741-9999 (PDF)
RoHS Certificate of Compliance (PDF)

## Agency Certification

| | |
|---|---|
| CSA | LR19980 |
| UL | E29179 |

## General

| | |
|---|---|
| Product Family | PCB Receptacles |
| Series | 71742 |
| Application | Board-to-Board |
| Product Name | Mezzanine |

## Physical

| | |
|---|---|
| Circuits (Loaded) | 84 |
| Color - Resin | Natural |
| Flammability | 94V-0 |
| Glow-Wire Compliant | No |
| Lock to Mating Part | Yes |
| Material - Metal | Phosphor Bronze |
| Material - Plating Mating | Gold |
| Material - Plating Termination | Tin |
| Material - Resin | High Temperature Thermoplastic |
| Number of Rows | 2 |
| Orientation | Vertical |
| PCB Locator | Yes |
| PCB Retention | None |
| PCB Thickness Recommended (in) | 0.040 In |
| PCB Thickness Recommended (mm) | 1.00 mm |
| Packaging Type | Embossed Tape on Reel |
| Pitch - Mating Interface (in) | 0.039 In |
| Pitch - Mating Interface (mm) | 1.00 mm |
| Plating min: Mating (µin) | 10 |
| Plating min: Mating (µm) | 0.25 |
| Plating min: Termination (µin) | 40.8 |
| Plating min: Termination (µm) | 1.02 |
| Polarized to PCB | No |
| Robotic Placement | Pick and Place Cap |
| Surface Mount Compatible (SMC) | N/A |
| Temperature Range - Operating | -55°C to +85°C |
| Termination Interface: Style | Surface Mount |

## Electrical

| | |
|---|---|
| Current - Maximum per Contact | 1A |
| Voltage - Maximum | 100V |

## Solder Process Data

| | |
|---|---|
| Lead-free Process Capability | Reflow Capable (SMT only) |
| Process Temperature max. C | 260 |

## Material Info

**EU RoHS**
**ELV and RoHS Compliant**
**REACH SVHC**
**Contains SVHC: No**
**Halogen-Free Status**
**Halogen-Free**

**China RoHS**

**Need more information on product environmental compliance?**

Email productcompliance@molex.com
For a multiple part number RoHS Certificate of Compliance, click here

Please visit the Contact Us section for any non-product compliance questions.

**Search Parts in this Series**
71742Series

**Mates With**
717410 for Stack Height 15mm, 717412 for Stack Height 13mm

## Reference - Drawing Numbers

| | |
|---|---|
| Product Specification | PS-71741-9999 |
| Sales Drawing | SDA-71742-3*** |

This document was generated on 04/08/2010

**PLEASE CHECK WWW.MOLEX.COM FOR LATEST PART INFORMATION**

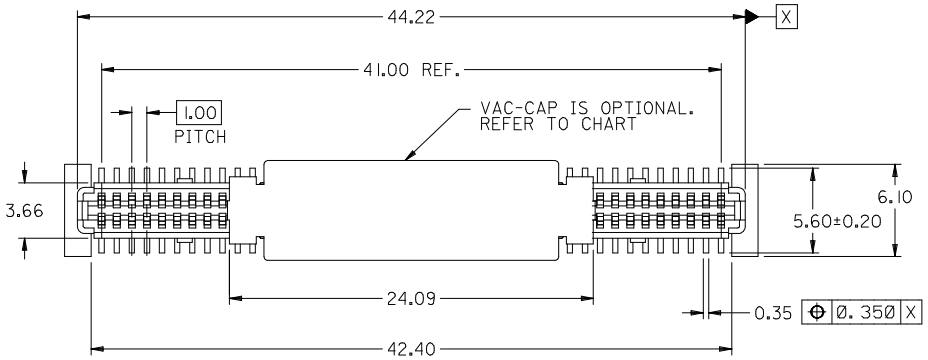


| | | | | | |
|---|---|---|---|---|---|
| 71742-3004 | 0.76 (30 MICROINCH) | YES | YES | PK-70873-063 | TAPE & REEL |
| 71742-3003 | 0.25 (10 MICROINCH) | YES | YES | PK-70873-063 | TAPE & REEL |
| 71742-3001 | 0.25 (10 MICROINCH) | NO | YES | PK-70873-063 | TAPE & REEL |
| ITEM NUMBER | CONTACT AREA PLATING MINIMUM GOLD THICKNESS IN MICROMETERS (SEE NOTES FOR OTHER PLATINGS) | PEGS | PICK & PLACE CAP | PACKAGING SPEC. NUMBER | PACKAGING TYPE |

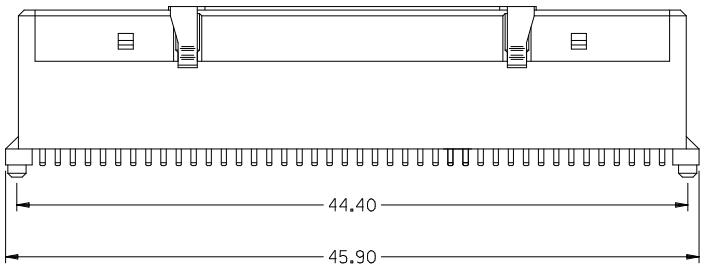


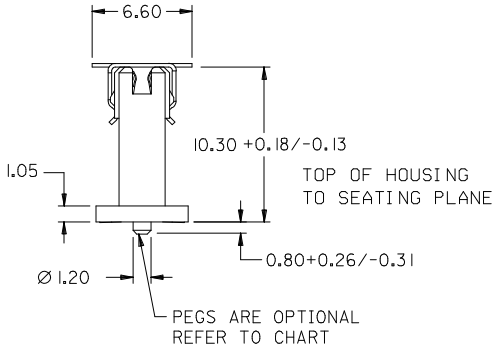


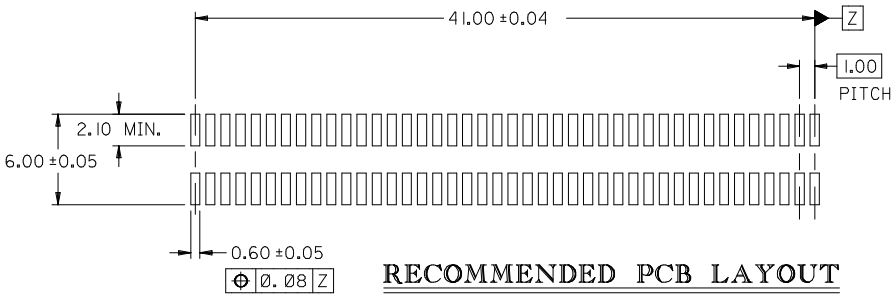


## RECOMMENDED PCB LAYOUT

RECOMMENDED PCB THICKNESS: 1.0±0.1mm MIN.

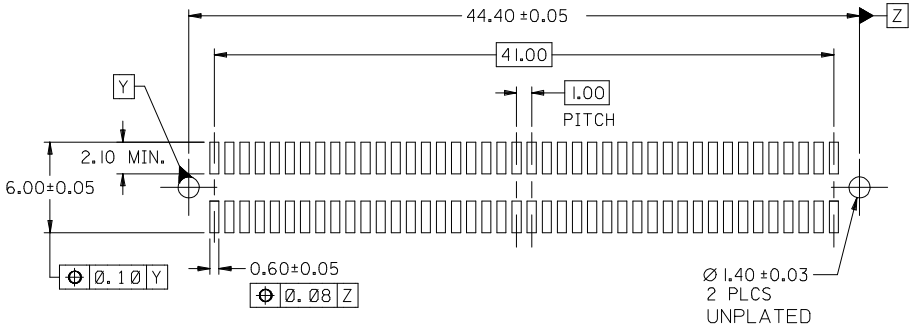


## RECOMMENDED PCB LAYOUT WITH PEGS

RECOMMENDED PCB THICKNESS: 1.0±0.1mm MIN.

## NOTES:

1. HOUSING MATERIAL: GLASS FILLED LIQUID CRYSTAL POLYMER (LCP); UL RATING: 94V-0; COLOR: WHITE (NATURAL).
   TERMINAL MATERIAL: PHOSPHOR BRONZE.
   VACUUM CAP MATERIAL: STAINLESS STEEL.
2. CONTACT FINISH:
   SEE TABLE FOR THICKNESS OF GOLD PLATING IN CONTACT AREA.
   1.90 MICROMETER MINIMUM TIN PLATING IN SOLDER TAIL AREA.
   OVER NICKEL PLATING OVERALL.
3. THIS PART CONFORMS TO MOLEX PRODUCT SPECIFICATION PS-71741-9999.
4. DIMENSIONS ARE IN MILLIMETERS.
5. PACKAGING SPECIFICATIONS: REFER TO CHART.

CLARIFY DIMENSIONS
EC NO: UCP2009-2408 2009/04/20
DRWN:BBARKER 2009/04/20
CH'KD:DMORGAN 2009/04/21
APPR:SMILLER
DESCRIPTION
REV: I

QUALITY SYMBOLS
▼=0
▽=0

GENERAL TOLERANCES (UNLESS SPECIFIED)

| | mm | INCH |
|---|---|---|
| 4 PLACES | ± --- | ± --- |
| 3 PLACES | ± --- | ± --- |
| 2 PLACES | ± 0.13 | ± --- |
| 1 PLACE | ± 0.25 | ± --- |
| ANGULAR ±1/2° | | |

DRAFT WHERE APPLICABLE MUST REMAIN WITHIN DIMENSIONS

DIMENSION STYLE: MM ONLY
SCALE
DESIGN UNITS: METRIC
THIRD ANGLE PROJECTION
DRAWN BY: WGM DATE: 97/08/04
CHECKED BY: DATE:
APPROVED BY: DJB DATE: 97/08/04
MATERIAL NO.: SEE TABLE
TITLE: SALES ASSY, 1.0MM 84 CKT BOARD-TO-BOARD RECPTACLE 10.3 STACK HEIGHT
molex MOLEX INCORPORATED
DOCUMENT NO.: SDA-71742-3***
SHEET NO.: 1 OF 2
SIZE C

THIS DRAWING CONTAINS INFORMATION THAT IS PROPRIETARY TO MOLEX INCORPORATED AND SHOULD NOT BE USED WITHOUT WRITTEN PERMISSION

RECOMMENDED PLUG/RECEPTACLE COMBINATION FOR
MATED STACK HEIGHT PER EIA STANDARD 700 AAAB

| MATED STACK HEIGHT | RECEPTACLE HEIGHT | RECEPTACLE SERIES NO. | PLUG HEIGHT | PLUG SERIES NO. |
|---|---|---|---|---|
| 15.00/.591 | 10.30/.406 | 71742-3*** | 4.30/.169 | 71741-0*** |
| 13.00/.512 | 10.30/.406 | 71742-3*** | 2.30/..091 | 71741-2*** |

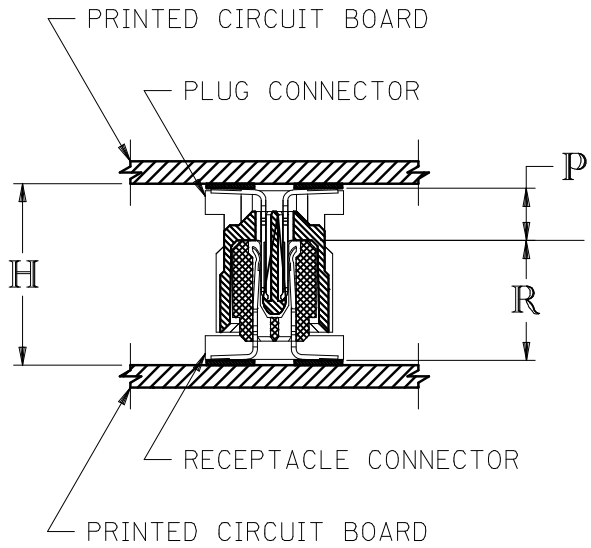


PLUG STACK HEIGHT
+ RECEPTACLE STACK HEIGHT
+ 0.40/.016 (SOLDER PASTE ALLOWANCE)
= MATED STACK HEIGHT

P = PLUG STACK HEIGHT
R = RECEPTACLE STACK HEIGHT
H = MATED STACK HEIGHT

SEE SHEET 1
EC NO: UCP2009-2408 2009/04/20
DRWN:BBARKER 2009/04/20
CHKD:DMORGAN 2009/04/21
APPR:SMILLER
DESCRIPTION
H
REV

QUALITY SYMBOLS
▼=0
▽=0

GENERAL TOLERANCES (UNLESS SPECIFIED)

| | mm | INCH |
|---|---|---|
| 4 PLACES | ± --- | ± --- |
| 3 PLACES | ± --- | ± --- |
| 2 PLACES | ± 0.13 | ± --- |
| 1 PLACE | ± 0.25 | ± --- |
| ANGULAR ±1/2° | | |

DRAFT WHERE APPLICABLE MUST REMAIN WITHIN DIMENSIONS

DIMENSION STYLE: MM ONLY
SCALE
DESIGN UNITS: METRIC
THIRD ANGLE PROJECTION

DRAWN BY: WGM DATE: 97/08/04
CHECKED BY: DATE:
APPROVED BY: DJB DATE: 97/08/04
MATERIAL NO.: SEE TABLE

TITLE: SALES ASSY, 1.0MM 84 CKT BOARD-TO-BOARD RECPTACLE 10.3 STACK HEIGHT
molex MOLEX INCORPORATED
DOCUMENT NO.: SDA-71742-3***
SHEET NO.: 1 OF 2
SIZE C

THIS DRAWING CONTAINS INFORMATION THAT IS PROPRIETARY TO MOLEX INCORPORATED AND SHOULD NOT BE USED WITHOUT WRITTEN PERMISSION

*RECOMMENDED PLUG/RECEPTACLE COMBINATION FOR
MATED STACK HEIGHT PER EIA STANDARD 700 AAAB

| MATED STACK HEIGHT | RECEPTACLE HEIGHT | RECEPTACLE SERIES NO. | PLUG HEIGHT | PLUG SERIES NO. |
|---|---|---|---|---|
| *15.00/.591 | 10.30/.406 | 71742-3*** | 4.30/.169 | 71741-0*** |
| 13.00/.512 | 10.30/.406 | 71742-3*** | 2.30/..091 | 71741-2*** |

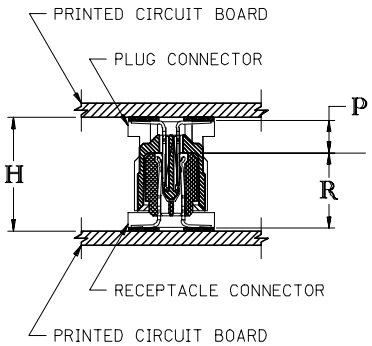


PLUG STACK HEIGHT
+ RECEPTACLE STACK HEIGHT
+ 0.40/.016 (SOLDER PASTE ALLOWANCE)
= MATED STACK HEIGHT

P = PLUG STACK HEIGHT
R = RECEPTACLE STACK HEIGHT
H = MATED STACK HEIGHT

CHG TO NEW BORDER
EC NO: UCP2007-1510
DRWN:BBARKER 2007/01/04
CH'KD:MIBARRA 2007/01/04
APPR:SMILLER 2007/01/05
DESCRIPTION
REV: G

QUALITY SYMBOLS
▼=0
▽=0

GENERAL TOLERANCES (UNLESS SPECIFIED)

| | mm | INCH |
|---|---|---|
| 4 PLACES | ± --- | ± --- |
| 3 PLACES | ± --- | ± --- |
| 2 PLACES | ± --- | ± --- |
| 1 PLACE | ± --- | ± --- |

ANGULAR ±1/2°

DRAFT WHERE APPLICABLE MUST REMAIN WITHIN DIMENSIONS

DIMENSION STYLE: MM/IN
SCALE: ---
DESIGN UNITS: METRIC
THIRD ANGLE PROJECTION

DRAWN BY: KAS DATE: 98/12/28
CHECKED BY: KAS DATE: 98/12/28
APPROVED BY: DJB DATE: 98/12/28

TITLE: SALES ASSEMBLY, 1.0 MM 84 CKT., BTB RECEPTACLE 10.30/.406 STACK HEIGHT

MOLEX INCORPORATED

MATERIAL NO.: SEE TABLE
DOCUMENT NO.: SDA-71742-3***
SHEET NO.: 2 OF 2
SIZE: C

THIS DRAWING CONTAINS INFORMATION THAT IS PROPRIETARY TO MOLEX INCORPORATED AND SHOULD NOT BE USED WITHOUT WRITTEN PERMISSION