PRODUCT NUMBER
71609-YXXZLF

- WHEN NEEDED, SUFFIX LETTER "LF" INDICATES THE PRODUCT IS RoHS COMPATIBLE, SEE NOTE 6
- OPTIONAL LETTER
  A: PRODUCT PACKED IN TAPE & REEL, SEE TA856.
- NUMBER OF POSITIONS PER ROW: 02 TO 40.
- PLATING CODE
  3= 0.76µm GOLD ON CONTACT AREA.
  3.81µm TIN-LEAD ON TAIL.
  4= 5µm TIN-LEAD ON CONTACT AREA.
  3.81µm TIN-LEAD ON TAIL.
  8= 0.38µm GOLD ON CONTACT AREA.
  3.81µm TIN-LEAD ON TAIL.

WHEN SUFFIX "LF" IS REQUIRED, 2µm MIN MATTE TIN OVER 1.27 MIN Ni IS SUPPLIED INSTEAD OF SnPb.

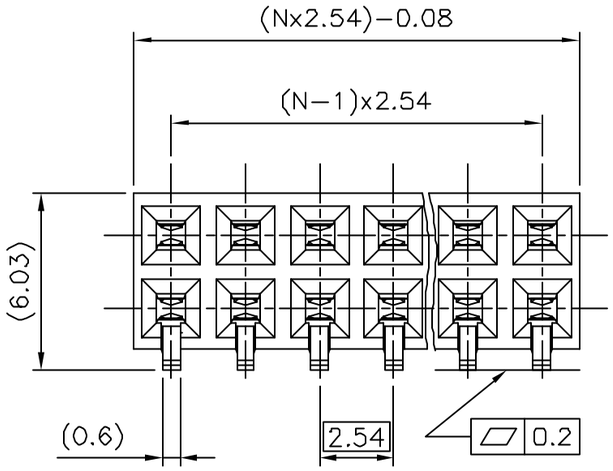

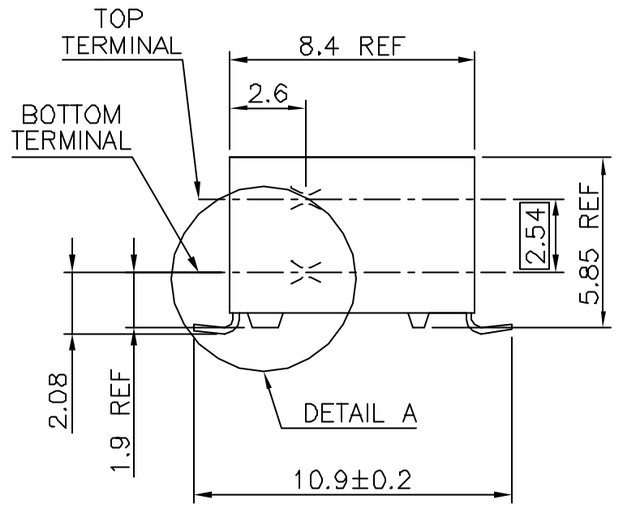

NOTES:
1 - HOUSING MAT'L: THERMOPLASTIC GLASS FILLED FLAME RETARDANT PER UL 94 V-0 COLOR: GREY.
2 - TERMINAL MATERIAL: PHOSPHOR BRONZE.
3 - 2 UP TO 4 POSITIONS PRODUCT PACKED IN PLASTIC BOX.
5 UP TO 40 POSITIONS PRODUCT PACKED IN TUBE.
4 - TO DETERMINE DIMENSIONS:
N = NUMBER OF POSITIONS PER ROW
EXAMPLE: 8 POS: (Nx2.54)-0.08=20.24 mm
5 - RECOMMENDED IR PROFIL PER TA 842.
6 - RoHS COMPATIBLE PRODUCT SPECIFICATIONS

a - PLATING:
- "LF" MEANS THE PRODUCT IS LEAD-FREE, 2µm MINIMUM MATTE TIN OVER 1.27µm MINIMUM NICKEL UNDERPLATE.

b - MANUFACTURING PROCESS COMPATIBILITY
- THE HOUSING WILL WITHSTAND EXPOSURE TO 260°C PEAK TEMPERATURE FOR 30 SECONDS MAX IN A CONVECTION, INFRA-RED OR VAPOR PHASE OR REFLOW OVEN.

c - LABELING:
- MEETS PACKAGING SPECS AS PER GS-14-920

d - LEGAL STATEMENT: SEE GS-22-008

SCALE 2.5:1

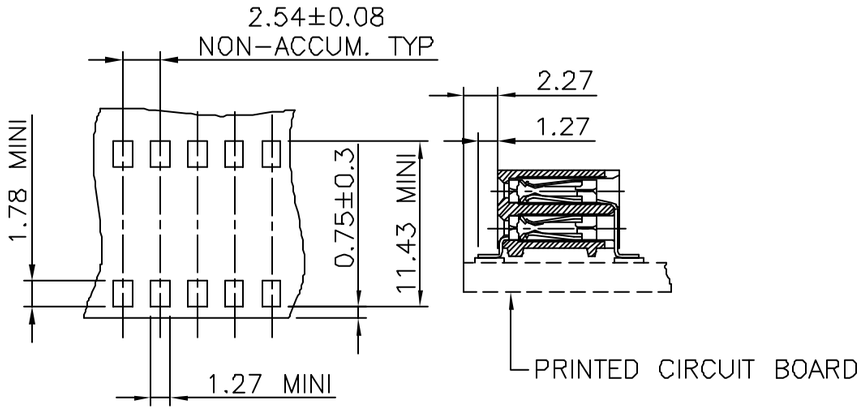

RECOMMENDED HOLE PATTERN

DETAIL A
SCALE 20:1

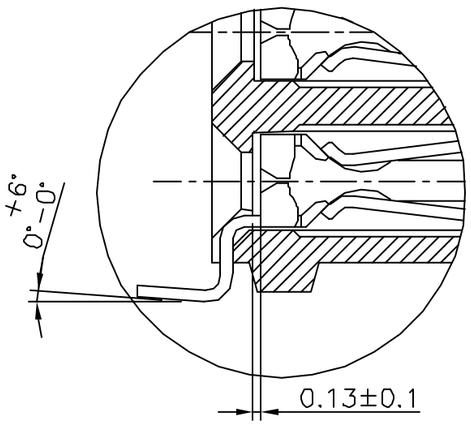

mat'l. code	surface	tolerance	projection	product family
SEE NOTE 1	ISO 1302	ISO 406 ISO 1101		DUBOX

ltr	ecn no	dr	date
W	F04-0347	DLE	04.11.08
X	F06-0204	DLE	06.06.10

tolerances unless otherwise specified: angles ±2°; linear ±0.3; mm; scale 10:1

dr	P.NIZZI	94.03.21
engr	P NIZZI	99.06.08
chr	JF NOTTEAU	97.05.13
appd	PNZ	99.06.08

title: BtB RECEPT. HORIZ DR SMT
dwg no: 71609 | sheet 1 of 1 | size A3
type: CUSTOMER Drawing
sheet index | revision sheet

FCIconnect.com
Copyright FCI

form: A3

PDM: Rev:X STATUS:Released Printed: Sep 15, 2009