U | Contact

METZ CONNECT
We realize ideas

P/N
310071xx
xx=number of poles
2017/05/04

Data Sheet
RP025xxIBWC

Illustration





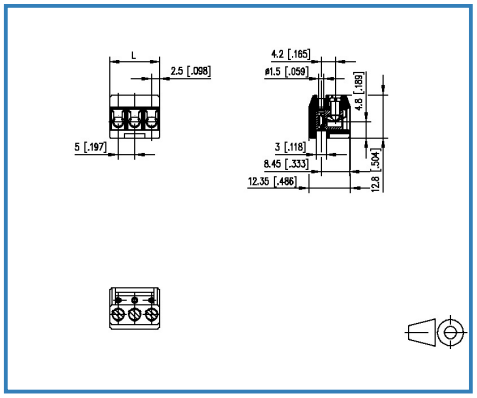

SEV c UL us

see enlarged drawing at the end of the document

Product specification

- screw type terminal block, pluggable
- centerline 5.00 mm, direction of connection 90°
- wire protector, fittable without loss of poles
- color black
- wire entry perpendicular to plug direction, lamella

© 2017 METZ CONNECT - Technische Änderungen vorbehalten! Subject to modifications! Sous réserve de modifications techniques!

Data Sheet
RP025xxIBWC

Technical Data

General Data

Tightening torque SEV	0.5 Nm		
Tightening torque UL	7 lb-in		
min. number of poles	2		
max. number of poles	24		
Insulating material class	CTI 600		
clearance/creepage dist.	2.3 mm		
protection category	IP 20		
Overvoltage category	III	III	II
Pollution degree	3	2	2
Rated voltage	100.0 V	320.0 V	320.0 V
Rated test voltage	2.5 kV	2.5 kV	2.5 kV

Connection data

Rated wiring solid wire	0.33 - 2.5 mm² / AWG 22 - 12
Rated wiring stranded wire	0.33 - 2.5 mm² / AWG 22 - 12

Approvals

extended wiring UL	Wire range extended to No. 30 AWG for factory-wiring. Two same size wires No. 22-16 AWG Cu, Sol/Str for field-wiring; No. 30-16 AWG Cu Sol/Str factory-wiring.
c UL us V / A / AWG	300 / 15 / 22 - 12
SEV	10 A / 250 V / 2.5 kV / 3 / IEC 61984 / 0.33 - 2.5 mm²

Material

insulating material	PA66
flammability class	V0
contact material	CuBe
Glow-Wire Flammability GWFI	960
Glow-Wire Flammability GWIT	775
contact surface	Ni + Ag
terminal body material	CuZn
terminal body surface	Cu + Ni

© 2017 METZ CONNECT - Technische Änderungen vorbehalten! Subject to modifications! Sous réserve de modifications techniques!

Data Sheet
RP025xxIBWC

screw surface	Zn Cr(VI)-frei/free
wire protector material	CuSn
wire protector surface	Sn
screw thread	M3

Climatic properties

upper limit temperature	105 °C
lower limit temperature	-40 °C

General

Tolerance	ISO 2768 -mH

© 2017 METZ CONNECT - Technische Änderungen vorbehalten! Subject to modifications! Sous réserve de modifications techniques!

Data Sheet
RP025xxIBWC

Matching Part

P/N	Product name
310171	PR015xxVBHC Typ 017
310271	PR015xxVBVC Typ 027
310391	PT055xxHBHC Typ 039
310411	PT065xxVBEN Typ 041
310421	PT065xxVBVN Type 042
314171	PM035xxVBHC Typ 417

Accessories

P/N	Product name
710084	710084
710085	710085
710121-2	710121
710122-2	710122
716846	716846

© 2017 METZ CONNECT - Technische Änderungen vorbehalten! Subject to modifications! Sous réserve de modifications techniques!

Data Sheet
RP025xxIBWC

Illustration

Drawing

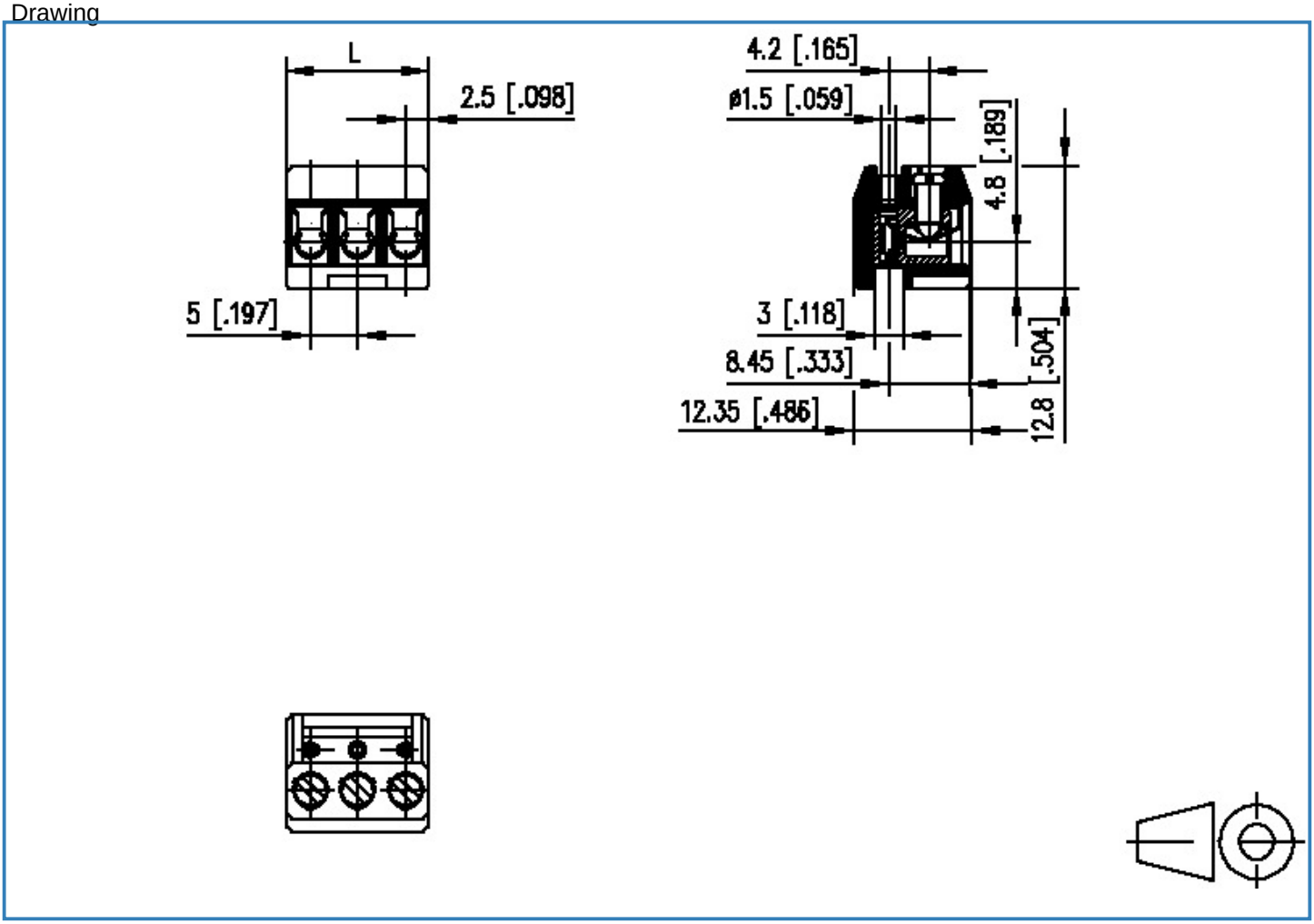

L=(pole size - 1) x centerline + 5 [0.197]

© 2017 METZ CONNECT - Technische Änderungen vorbehalten! Subject to modifications! Sous réserve de modifications techniques!