FEATURES

- SPST, Normally Open
- UL, CSA Certified
- 1500 Vac Optical Isolation
- G5 and OpenLine® Modules Provide Replaceable 5x20mm Glass Fuse
- Built-in Status LED
- Lifetime Warranty
- Switch AC or DC with the Same Module
- Very Low Off-State Leakage Current for AC loads
- No Off-State Leakage Current for DC loads



70L-ODC5R 70G-ODCR/OACRLY 70-ODCR/OACRLY 70M-ODCR

CIRCUITRY

Standard, Mini, G5

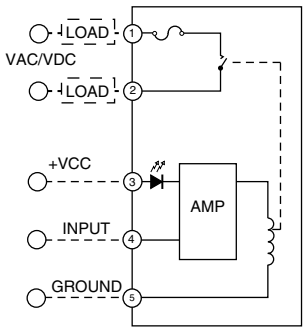

Fuse and status LED in G5 modules only.

OpenLine®

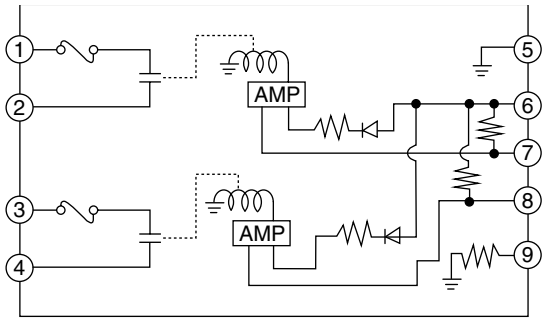

SPECIFICATIONS BY PACKAGE STYLE

Package Style		Std (70-)	Mini (70M-)	G5 (70G-)	OpenLine® (70L-)
Specifications	**Units**				
Isolation Voltage[1]	Vrms	1500	1500	1500	1500
Vibration[2]		MIL-STD-202	MIL-STD-202	MIL-STD-202	IEC68-2-6
Mechanical Shock[3]		MIL-STD-202	MIL-STD-202	MIL-STD-202	IEC68-2-7
Storage Temp. Range	°C	-40 to 70	-40 to 70	-40 to 70	-40 to 70
Operating Temp. Range	°C	-40 to 70	-40 to 70	-40 to 70	-40 to 70

[1] Field to logic and channel-to-channel if Grayhill racks are used.
[2] MIL-STD-202, Method 204, 20 G, 10-2000 Hz or IEC68-2-6, 0.15 mm/sec², 10-150 Hz.
[3] MIL-STD-202, Method 213, Condition F, 1500 G or IEC68-2-27, 11 mS, 15g.

SPECIFICATIONS BY PART NUMBER

Standard and Miniature Modules

Type/Function		Grayhill Part Number		
Miniature, Normally Open		**70M-ODC5R**		**70M-ODC24R**
Standard, Normally Open		**70-ODC5R**	**70-OAC5RLY**	**70-ODC24R**
Specifications	**Units**			
Maximum Line Voltage	Vdc/Vac	100/120	110/250	100/120
Load Voltage Range	Vdc/Vac	0-100/0-120	0-110/0-250	0-100/0-120
Maximum Contact Rating	W	10	90	10
Maximum Switching Current[1]	A	0.5	3.0	0.5
Maximum Carry Current[1]	A	1.0	5.0	1.0
Minimum Life Expectancy				
@ 10 Vdc/10 mA	Cycles	200×10^6	—	200×10^6
@ 48 Vdc/100 mA	Cycles	500×10^3	—	500×10^3
@ 120 Vac/80 mA	Cycles	500×10^3	—	500×10^3
@ 30 Vdc or 230 Vac/3A	Cycles	—	100×10^6	—
Maximum Contact Resistance	mΩ	250	250	250
Maximum Off-State Leakage	mA	.002	.002	.002
Maximum Turn-On Time[2]	mSec	1	11	1
Maximum Turn-Off Time[2]	mSec	1	11	1
Nominal Logic Voltage (Vcc)	Vdc	5	5	24
Logic Voltage Range	Vdc	4.8-6.0	4.8-6.0	20-30
Maximum Logic Supply Current				
@ Nominal Vcc	mA	10	26	16
Nominal Input Resistance (Rx)	Ω	500	200	1700
Minimum Drop-Out Voltage	Vdc	2.5	4.8	23
Maximum Reverse Logic Voltage	Vdc	-5	-5	-5

G5 and OpenLine® Modules

Type/Function		Grayhill Part Number			
G5 Fusible, Normally Open		**70L-ODC5R**	**70G-ODC5R**	**70G-OAC5RLY**	**70G-ODC24R**
Specifications	**Units**				
Maximum Line Voltage	Vdc/Vac	200/200	100/120	110/250	100/120
Load Voltage Range	Vdc/Vac	0-200/0-200	0-100/0-120	0-110/0-250	0-100/0-120
Maximum Contact Rating	W	10	10	90	10
Maximum Switching Current[1]	A	0.5	0.5	3.0	0.5
Maximum Carry Current[1]	A	1.5	1.0	5.0	1.0
Minimum Life Expectancy					
@ 1Vdc/10 mA	Cycles	1000×10^6	—	—	—
@ 10 Vdc/10 mA	Cycles	—	200×10^6	—	200×10^6
@ 48 Vdc/100 mA	Cycles	—	500×10^3	—	500×10^3
@ 120 Vac/80 mA	Cycles	500×10^3	500×10^3	—	500×10^3
@ 30 Vdc or 230 Vac/3A	Cycles		—	100×10^6	—
Maximum Contact Resistance	mΩ	300	250	250	250
Maximum Turn-On Time[2]	mSec	1	1	11	1
Maximum Turn-Off Time[2]	mSec	1	1	11	1
Max. Off-State Leakage @ Max. Line	mA	.002	.002	.002	.002
Nominal Logic Voltage (Vcc)	Vdc	5	5	5	24
Logic Voltage Range	Vdc	4.5-6.0	4.8-6.0	4.8-6.0	18-32
Max. Logic Supply Current					
@ Nominal Vcc	mA	30 max./channel	10	26	23
Nominal Input Resistance (Rx)	Ω	167	500	200	1200
Minimum Drop-Out Voltage	Vdc	4.5	1	1	23

[1] Inductive loads require diode suppression or RC network.
[2] Times include debounce.

Available from your local Grayhill Distributor.
For prices and discounts, contact a local Sales Office, an authorized local Distributor or Grayhill.