Data sheet | Item number: 704-2004

Interface module for system wiring; Pluggable connector per DIN 41651; Male connector; 20-pole; 16-channel digital input or output; 1-wire connection; in mounting carrier

www.wago.com/704-2004

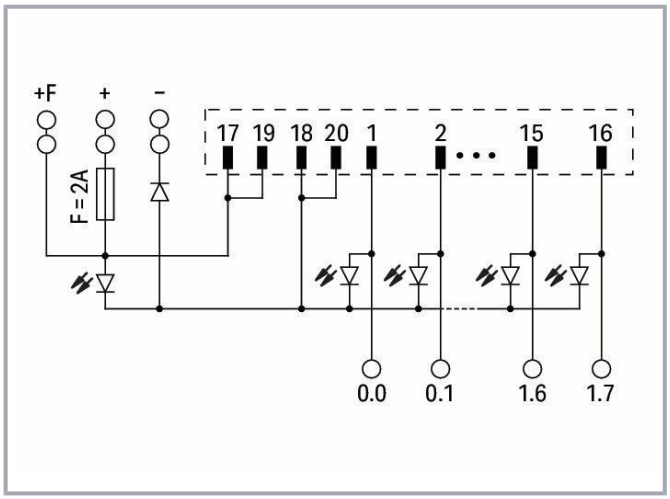

Data

Electrical data

Inputs/outputs	16-channel digital input or output
Circuit type	1-cond. connection
Nominal operating voltage	DC 24 V
Operating voltage range	±10 %
Power consumption (status indication)	5 mA

Subject to changes. Please also observe the further product documentation!

WAGO GmbH & Co. KG
Hansastr. 27
32423 Minden
Phone: +49571 887-0 | Fax: +49571 887-169
Email: info.de@wago.com | Web: www.wago.com

Do you have any questions about our products?
We are always happy to take your call at +49 (571) 887-44222.

Total current	2 A
Limiting continuous current	1 A
Status indicator	Green LED (channel) Yellow LED (power supply)
Internal fuse	2 A

Safety and protection

Rated voltage	50 V
Rated surge voltage	0.8 kV
Pollution degree	2

Connection data

Compatible PLC Modules	WAGO I/O System 750 WAGO I/O System 753 Omron CJ1W Rockwell Compact Logix Rockwell Control Logix Schneider Modicon Quantum Schneider Modicon M340 Schneider Twido Schneider TSX Schneider Modicon TM3 GE Fanuc RX3i GE Fanuc 9030 Siemens S7-1500 Siemens S7-400 Siemens S7-300
Compatible PLC I/O Card Types	6ES7 313-5BE01-0AB0 6ES7 313-5BG04-0AB0 6ES7 313-6BE01-0AB0 6ES7 313-6BF03-0AB0 6ES7 313-6CE01-0AB0 6ES7 313-6CF03-0AB0 6ES7 314-6BF01-0AB0 6ES7 314-6BG03-0AB0 6ES7 314-6CF01-0AB0 6ES7 314-6CG03-0AB0 6ES7 321-1BH02-0AA0 6ES7 321-1BH10-0AA0 6ES7 321-1BH80-0AA0 6ES7 321-1BL00-0AA0 6ES7 321-1BL80-0AA0 6ES7 321-1BP00-0AA0 6ES7 321-7BH01-0AB0

Subject to changes. Please also observe the further product documentation!

WAGO GmbH & Co. KG
Hansastr. 27
32423 Minden
Phone: +49571 887-0 | Fax: +49571 887-169
Email: info.de@wago.com | Web: www.wago.com

Do you have any questions about our products?
We are always happy to take your call at +49 (571) 887-44222.

6ES7 321-7BH80-0AA0
6ES7 322-1EH01-0AA0
6ES7 322-8BH01/8BH10-0AB0
6ES7 323-1BL00-0AA0
6ES7 326-1BK01-0AB0
6ES7 326-1RF00-0AB0
6ES7 511-1CK00-0AB0
6ES7 512-1CK00-0AB0
6ES7 521-1BH00-0AA0
6ES7 521-1BH10-0AA0
6ES7 521-1BL00-0AB0
6ES7 521-1BL10-0AA0
6ES7 522-1BH00-0AB0
6ES7 522-1BH01-0AB0
6ES7 522-1BH10-0AA0
6ES7 522-1BL00-0AB0
6ES7 522-1BL01-0AB0
6ES7 522-1BL10-0AA0
6ES7 523-1BL00-0AA0
6ES7 526-2BF00-0AB0
6ES7 526-1BH00-0AB0
6ES7 421-7BH01-0AB0
6ES7 421-1BL01-0AA0
6ES7 422-7BL00-0AB0
6ES7 422-1BL00-0AA0
IC693 MDL241
IC693 MDL640
IC693 MDL643
IC693 MDL645
IC693 MDL646
IC693 MDL655
IC693 MDL740
IC693 MDL742
IC693 MDL753
IC694 MDL655
IC694 MDL753
TM3 DI16(G)
TM3 DI16K
TM3 DI32K
TM3 DQ16T(G)
TM3 DQ16TK
TM3 DQ32TK
TSX DEZ 12D2K
TSX DEZ 32D2
TSX DSZ 32T2
TSX DMZ 28DT
TSX DMZ 28DTK
TSX DMZ 64DTK

WAGO GmbH & Co. KG
Hansastr. 27
32423 Minden
Phone: +49571 887-0 | Fax: +49571 887-169
Email: info.de@wago.com | Web: www.wago.com

TSX DEY 16D2
TSX DEY 16FK
TSX DEY 32D2K
TSX DEY 64D2K
TSX DSY 16T2
TSX DSY 32T2K
TSX DSY 64T2K
TSX DMY 28FK
TSX DMY 28RFK
TM2 DDI 16DK
TM2 DDI 32DK
TM2 DDO 16TK
TM2 DDO 32TK
140 DDI 353 00
140 DDI 364 00
140 DSI 353 00
140 DDO 353 00
140 DDO 353 01
140 DDO 364 00
140 DVO 853 00
140 DDM 390 00
BMX DDI 1602
BMX DDI 3202K
BMX DDI 6402K
BMX DDO 1602
BMX DDO 3202K
BMX DDO 6402K
BMX DDM 3202K
1769 - IQ16
1769 - IQ16F
1769 - IQ32
1769 - IQ32T
1769 - OB16
1769 - OB16P
1769 - OB32
1769 - OB32T
1756 - IB16I
1756 - IB16ISOE
1756 - IB32
1756 - OB16E
1756 - OB16I
1756 - OB16IS
1756 - OB32
753-430 (x2)
753-431 (x2)
753-530 (x2)
750-1502
750-1500

WAGO GmbH & Co. KG
Hansastr. 27
32423 Minden
Phone: +49571 887-0 | Fax: +49571 887-169
Email: info.de@wago.com | Web: www.wago.com

	750-1400 CJ1W-ID211 CJ1W-ID231 CJ1W-ID232 CJ1W-ID261 CJ1W-ID262 CJ1W-IDP01 CJ1W-INT01 CJ1W-OD212 CJ1W-OD232 CJ1W-OD262 CJ1W-MD232
Connection type (1)	System
Pole number 1	20
Pluggable connectors	DIN 41651 male connector
Mating direction	vertical
Connection type 2	Field
Pole number 2	16
Design 2	PCB terminal blocks (double-deck)
WAGO Connector 2	WAGO 736 Series
Solid conductor 2	0.08 … 2.5 mm² / 28 … 12 AWG
Fine-stranded conductor 2	0.08 … 2.5 mm² / 28 … 12 AWG
Strip length 2	5 … 6 mm / 0.2 … 0.24 inch
Connection type (3)	Supply
Pole number 3	6
Design 3	PCB terminal blocks (double-deck)
WAGO Connector 3	WAGO 736 Series
Solid conductor 3	0.08 … 2.5 mm² / 28 … 12 AWG
Fine-stranded conductor (3)	0.08 … 2.5 mm² / 28 … 12 AWG
Strip length 3	5 … 6 mm / 0.2 … 0.24 inch
Note (conductor cross-section)	12 AWG: THHN, THWN

Physical data

Width	55 mm / 2.165 inch
Height	85 mm / 3.346 inch
Depth from upper edge of DIN-rail	50 mm / 1.969 inch

Mechanical data

Mounting type	DIN-35 rail

Subject to changes. Please also observe the further product documentation!

WAGO GmbH & Co. KG
Hansastr. 27
32423 Minden
Phone: +49571 887-0 | Fax: +49571 887-169
Email: info.de@wago.com | Web: www.wago.com

Do you have any questions about our products?
We are always happy to take your call at +49 (571) 887-44222.

Material data

Fire load	1.198 MJ
Weight	80 g

Environmental requirements

Surrounding air temperature (operation)	-20 … 50 °C
Surrounding air temperature (storage)	-40 … 70 °C
Relative humidity	85% (non-condensing)

Commercial data

Product Group	30 ()
PU (SPU)	1 Stück
Packaging type	box
Country of origin	FR
GTIN	4050821161998
Customs tariff number	85366990990

Optional accessories

Cables and pluggable connectors

System cable

	**Item no.: 706-2300/301-300** System cable; for Siemens S7-300; 2 x 16 digital inputs or outputs; Length: 3 m; Conductor cross-section: 0.14 mm²	www.wago.com/706-2300/301-300
	**Item no.: 706-2300/301-200** System cable; for Siemens S7-300; 2 x 16 digital inputs or outputs; Length: 2 m; Conductor cross-section: 0.14 mm²	www.wago.com/706-2300/301-200
	**Item no.: 706-2300/100-200** System cable; for Siemens S7-300; 2 x 16 digital inputs; Length: 2 m; Conductor cross-section: 0.34 mm²	www.wago.com/706-2300/100-200
	**Item no.: 706-2300/200-100** System cable; for Siemens S7-300; 2 x 16 digital outputs; Length: 1 m; Conductor cross-section: 0.14 mm²	www.wago.com/706-2300/200-100
	**Item no.: 706-2300/100-100** System cable; for Siemens S7-300; 2 x 16 digital inputs; Length: 1 m; Conductor cross-section: 0.34 mm²	www.wago.com/706-2300/100-100
	**Item no.: 706-2300/100-300** System cable; for Siemens S7-300; 2 x 16 digital inputs; Length: 3 m; Conductor cross-section: 0.34 mm²	www.wago.com/706-2300/100-300

Subject to changes. Please also observe the further product documentation!

WAGO GmbH & Co. KG
Hansastr. 27
32423 Minden
Phone: +49571 887-0 | Fax: +49571 887-169
Email: info.de@wago.com | Web: www.wago.com

Do you have any questions about our products?
We are always happy to take your call at +49 (571) 887-44222.

	**Item no.: 706-2300/101-200** System cable; for Siemens S7-300; 16 digital inputs; Length: 2 m; Conductor cross-section: 0.34 mm²	www.wago.com/706-2300/101-200
	**Item no.: 706-2300/200-300** System cable; for Siemens S7-300; 2 x 16 digital outputs; Length: 3 m; Conductor cross-section: 0.14 mm²	www.wago.com/706-2300/200-300
	**Item no.: 706-2300/101-300** System cable; for Siemens S7-300; 16 digital inputs; Length: 3 m; Conductor cross-section: 0.34 mm²	www.wago.com/706-2300/101-300
	**Item no.: 706-2300/200-200** System cable; for Siemens S7-300; 2 x 16 digital outputs; Length: 2 m; Conductor cross-section: 0.14 mm²	www.wago.com/706-2300/200-200
	**Item no.: 706-2300/300-100** System cable; for Siemens S7-300; 16 digital inputs or outputs; Length: 1 m; Conductor cross-section: 0.14 mm²	www.wago.com/706-2300/300-100
	**Item no.: 706-2300/101-100** System cable; for Siemens S7-300; 16 digital inputs; Length: 1 m; Conductor cross-section: 0.34 mm²	www.wago.com/706-2300/101-100
	**Item no.: 706-2300/301-100** System cable; for Siemens S7-300; 2 x 16 digital inputs or outputs; Length: 1 m; Conductor cross-section: 0.14 mm²	www.wago.com/706-2300/301-100
	**Item no.: 706-2300/300-200** System cable; for Siemens S7-300; 16 digital inputs or outputs; Length: 2 m; Conductor cross-section: 0.14 mm²	www.wago.com/706-2300/300-200
	**Item no.: 706-2300/300-300** System cable; for Siemens S7-300; 16 digital inputs or outputs; Length: 3 m; Conductor cross-section: 0.14 mm²	www.wago.com/706-2300/300-300
	**Item no.: 706-7753/301-200** System cable; for WAGO-I/O-SYSTEM, 753 Series; 2 x 16 digital inputs or outputs; Length: 2 m; Conductor cross-section: 0.14 mm²	www.wago.com/706-7753/301-200

Connection cable

	**Item no.: 706-100/1300-200** Connection cable; 20-pole; Pluggable connector per DIN 41651; open-ended; Length: 2 m; Conductor cross-section: 0.14 mm²; UR components	www.wago.com/706-100/1300-200
	**Item no.: 706-100/1300-400** Connection cable; 20-pole; Pluggable connector per DIN 41651; open-ended; Length: 4 m; Conductor cross-section: 0.14 mm²; UR components	www.wago.com/706-100/1300-400

Marking accessories

Marking strip

WAGO GmbH & Co. KG
Hansastr. 27
32423 Minden
Phone: +49571 887-0 | Fax: +49571 887-169
Email: info.de@wago.com | Web: www.wago.com



Item no.: 2009-110
Marking strips; for Smart Printer; on reel; not stretchable; plain; snap-on type; white
www.wago.com/2009-110



Item no.: 709-196
Marking strips; for laser printer; translucent
www.wago.com/709-196



Item no.: 709-178
Marking strips; on reel; 7.5 mm wide; not stretchable; plain; snap-on type; white
www.wago.com/709-178



Item no.: 709-177
Marking strips; on reel; 7.5 mm wide; not stretchable; plain; snap-on type; translucent
www.wago.com/709-177

Downloads

Documentation

Bid Text

704-2004 X81 - Datei	2019. 2. 19.	xml 3.9 kB	Download
704-2004 doc - Datei	2015. 11. 20.	doc 26.1 kB	Download

Additional Information

Disposal; Electrical and electronic equipment, Packaging	V 1.0.0	pdf 265.8 kB	Download

System Description

WAGO System Wiring, Selection Guide This guide will help you select the appropriate interface modules and system cables for the controller you are usng.		pdf 545.9 kB	Download

CAD/CAE-Data

CAD data

2D/3D Models 704-2004		URL	Download

CAE data

Subject to changes. Please also observe the further product documentation!

WAGO GmbH & Co. KG
Hansastr. 27
32423 Minden
Phone: +49571 887-0 | Fax: +49571 887-169
Email: info.de@wago.com | Web: www.wago.com

Do you have any questions about our products?
We are always happy to take your call at +49 (571) 887-44222.

EPLAN Data Portal 704-2004	URL	Download
WSCAD Universe 704-2004	URL	Download
ZUKEN Portal 704-2004	URL	Download

Environmental Product Compliance

Compliance Search

Environmental Product Compliance 704-2004 Interface module for system wiring; Pluggable connector per DIN 41651; Male connector; 20-pole; 16-channel digital input or output; 1-wire connection; in mounting carrier	URL	Download

Installation Notes

WAGO GmbH & Co. KG
Hansastr. 27
32423 Minden
Phone: +49571 887-0 | Fax: +49571 887-169
Email: info.de@wago.com | Web: www.wago.com