HIGH-SPEED 16K X 9 DUAL-PORT STATIC RAM

IDT7016S/L

Features

- **True Dual-Ported memory cells which allow simultaneous reads of the same memory location**
- **High-speed access**
  - *Commercial:12/15/20/25/35ns (max.)*
  - *Industrial: 20ns (max.)*
  - *Military: 20/25/35ns (max.)*
- **Low-power operation**
  - *IDT7016S*
    Active: 750mW (typ.)
    Standby: 5mW (typ.)
  - *IDT7016L*
    Active: 750mW (typ.)
    Standby: 1mW (typ.)
- **IDT7016 easily expands data bus width to 18 bits or more using the Master/Slave select when cascading more than one device**
- **M/$\overline{S}$ = VIH for $\overline{BUSY}$ output flag on Master**
  M/$\overline{S}$ = VIL for $\overline{BUSY}$ input on Slave
- **Busy and Interrupt Flag**
- **On-chip port arbitration logic**
- **Full on-chip hardware support of semaphore signaling between ports**
- **Fully asynchronous operation from either port**
- **TTL-compatible, single 5V (±10%) power supply**
- **Available in ceramic 68-pin PGA, 68-pin PLCC, and an 80-pin TQFP**
- **Industrial temperature range (–40°C to +85°C) is available for selected speeds**
- **Green parts available, see ordering information**

Functional Block Diagram

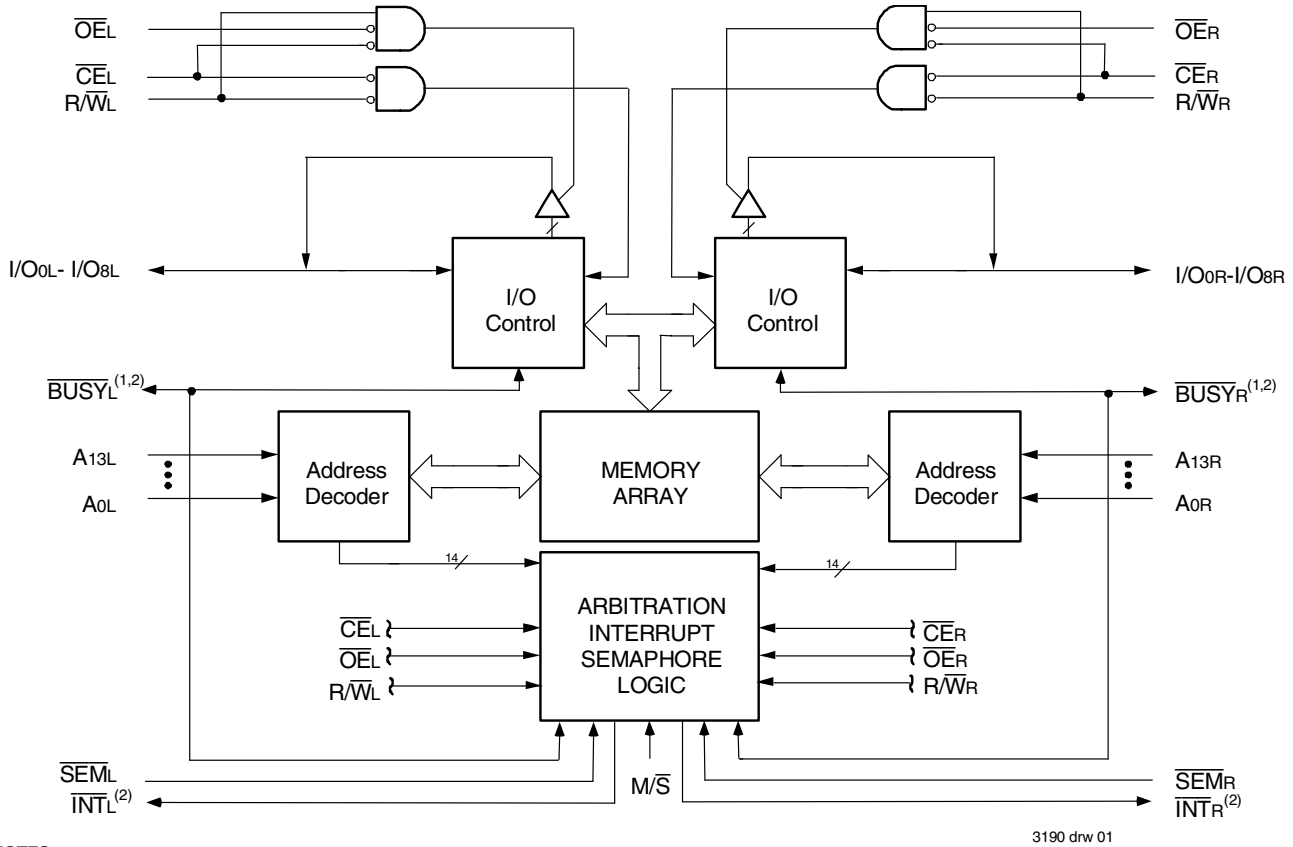

NOTES:

1. In MASTER mode: $\overline{BUSY}$ is an output and is a push-pull driver
   In SLAVE mode: $\overline{BUSY}$ is input.
2. $\overline{BUSY}$ outputs and $\overline{INT}$ outputs are non-tri-stated push-pull drivers.

OCTOBER 2014

©2014 Integrated Device Technology, Inc.

Description

The IDT7016 is a high-speed 16K x 9 Dual-Port Static RAM. The IDT7016 is designed to be used as stand-alone Dual-Port RAMs or as a combination MASTER/SLAVE Dual-Port RAM for 18-bit-or-more wider systems. Using the IDT MASTER/SLAVE Dual-Port RAM approach in 18-bit or wider memory system applications results in full-speed, error-free operation without the need for additional discrete logic.

This device provides two independent ports with separate control, address, and I/O pins that permit independent, asynchronous access for reads or writes to any location in memory. An automatic power down feature controlled by $\overline{CE}$ permits the on-chip circuitry of each port to enter a very low standby power mode.

Fabricated using IDT's CMOS high-performance technology, these devices typically operate on only 750mW of power.

The IDT7016 is packaged in a ceramic 68-pin PGA, a 64-pin PLCC and an 80-pinTQFP (Thin Quad Flatpack). Military grade product is manufactured in compliance with the latest revision of MIL-PRF-38535 QML, making it ideally suited to military temperature applications demanding the highest level of performance and reliability.

Pin Configurations[1,2,3]

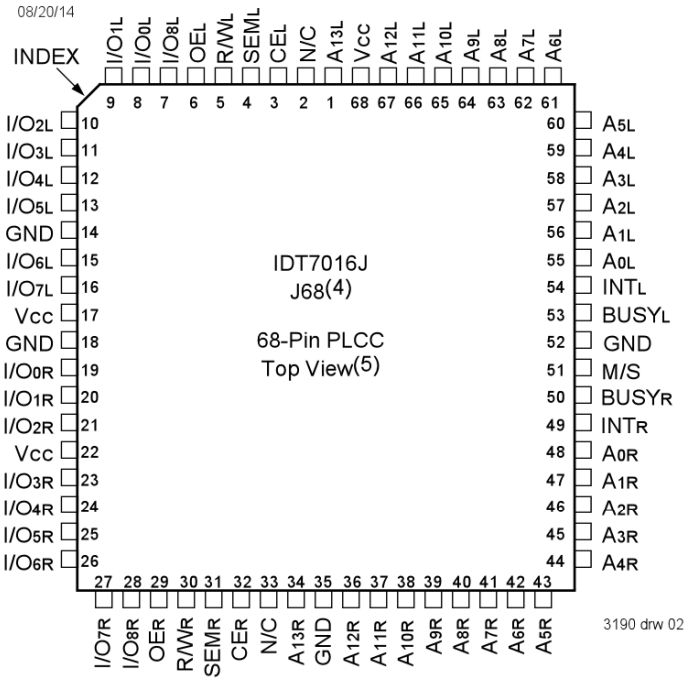

NOTES:
1. All VCC pins must be connected to power supply.
2. All GND pins must be connected to ground supply.
3. Package body is approximately .95 in x .95 in x .17 in.
4. This package code is used to reference the package diagram.
5. This text does not imply orientation of Part-marking.

Pin Names

Left Port	Right Port	Names
$\overline{CE}_L$	$\overline{CE}_R$	Chip Enable
$R/\overline{W}_L$	$R/\overline{W}_R$	Read/Write Enable
$\overline{OE}_L$	$\overline{OE}_R$	Output Enable
A_{0L} - A_{13L}	A_{0R} - A_{13R}	Address
I/O_{0L} - I/O_{8L}	I/O_{0R} - I/O_{8R}	Data Input/Output
$\overline{SEM}_L$	$\overline{SEM}_R$	Semaphore Enable
$\overline{INT}_L$	$\overline{INT}_R$	Interrupt Flag
$\overline{BUSY}_L$	$\overline{BUSY}_R$	Busy Flag
$M/\overline{S}$		Master or Slave Select
V_{CC}		Power
GND		Ground

3190 tbl 01

Pin Configurations[1,2,3] (con't.)

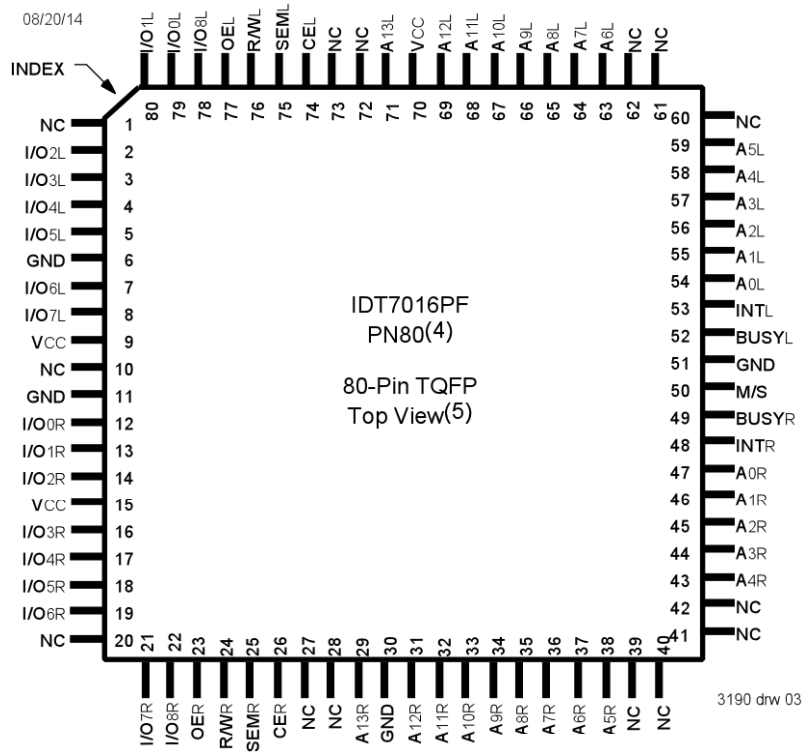

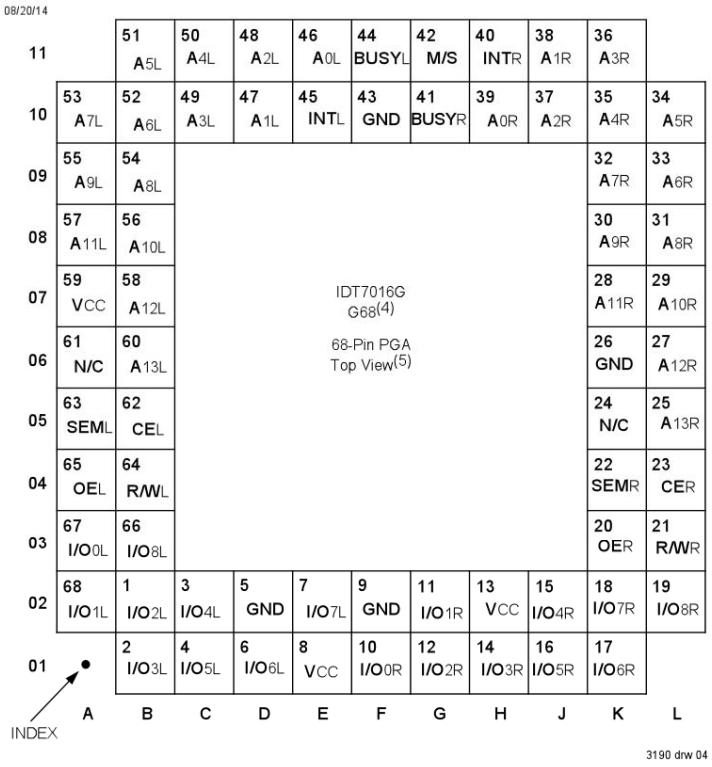

NOTES:
1. All VCC pins must be connected to power supply.
2. All GND pins must be connected to ground supply.
3. PN80-1 package body is approximately
   14mm x 14mm x 1.4mm.
   G68-1 package body is approximately
   1.18 in x 1.18 in x .16 in.
4. This package code is used to reference the package diagram.
5. This text does not indicate orientation of the actual part-marking.

Truth Table I: Non-Contention Read/Write Control

Inputs[1]				Outputs	
$\overline{CE}$	R/$\overline{W}$	$\overline{OE}$	$\overline{SEM}$	I/O0-8	Mode
H	X	X	H	High-Z	Deselcted: Power-Down
L	L	X	H	DATAIN	Write to Memory
L	H	L	H	DATAOUT	Read Memory
X	X	H	X	High-Z	Outputs Disabled

3190 tbl 02

NOTE:
1. Condition: A_{0L} — $A_{13L} \neq A_{0R}$ — A_{13R}

Truth Table II: Semaphore Read/Write Control(1)

Inputs				Outputs	
$\overline{CE}$	R/$\overline{W}$	$\overline{OE}$	$\overline{SEM}$	I/O0-8	Mode
H	H	L	L	DATAOUT	Read Semaphore Flag Data Out (I/O0 - I/O8)
H	↑	X	L	DATAIN	Write I/O0 into Semaphore Flag
L	X	X	L	—	Not Allowed

3190 tbl 03

NOTE:
1. There are eight semaphore flags written to via I/O0 and read from all I/Os (I/O0-I/O8). These eight semaphores are addressed by A0 - A2.

Absolute Maximum Ratings(1)

Symbol	Rating	Commercial & Industrial	Military	Unit
VTERM(2)	Terminal Voltage with Respect to GND	-0.5 to +7.0	-0.5 to +7.0	V
TBIAS	Temperature Under Bias	-55 to +125	-65 to +135	°C
TSTG	Storage Temperature	-65 to +150	-65 to +150	°C
IOUT	DC Output Current	50	50	mA

3190 tbl 04

NOTES:
1. Stresses greater than those listed under ABSOLUTE MAXIMUM RATINGS may cause permanent damage to the device. This is a stress rating only and functional operation of the device at these or any other conditions above those indicated in the operational sections of this specification is not implied. Exposure to absolute maximum rating conditions for extended periods may affect reliability.
2. VTERM must not exceed Vcc + 10% for more than 25% of the cycle time or 10ns maximum, and is limited to ≤ 20mA for the period of VTERM ≥ Vcc + 10%.

Maximum Operating Temperature and Supply Voltage(1)

Grade	Ambient Temperature	GND	Vcc
Military	-55°C to +125°C	0V	5.0V ± 10%
Commercial	0°C to +70°C	0V	5.0V ± 10%
Industrial	-40°C to +85°C	0V	5.0V ± 10%

3190 tbl 05

NOTES:
1. This is the parameter TA. This is the "instant on" case temperature.

Recommended DC Operating Conditions

Symbol	Parameter	Min.	Typ.	Max.	Unit
Vcc	Supply Voltage	4.5	5.0	5.5	V
GND	Ground	0	0	0	V
VIH	Input High Voltage	2.2	—	6.0(2)	V
VIL	Input Low Voltage	-0.5(1)	—	0.8	V

3190 tbl 06

NOTES:
1. VIL ≥ -1.5V for pulse width less than 10ns.
2. VTERM must not exceed Vcc + 10%.

Capacitance[1]

(T_A = +25°C, f = 1.0mhz, for TQFP ONLY)

Symbol	Parameter	Conditions[2]	Max.	Unit
C_{IN}	Input Capacitance	V_{IN} = 3dV	9	pF
C_{OUT}	Output Capacitance	V_{OUT} = 3dV	10	pF

3190 tbl 07

NOTES:
1. This parameter is determined by device characteristics but is not production tested.
2. 3dV references the interpolated capacitance when the input and output signals switch from 0V to 3V or from 3V to 0V .

DC Electrical Characteristics Over the Operating Temperature and Supply Voltage Range (V_{CC} = 5.0V ± 10%)

Symbol	Parameter	Test Conditions	7016S		7016L		Unit
			Min.	Max.	Min.	Max.	
$\|I_{LI}\|$	Input Leakage Current[1]	V_{CC} = 5.5V, V_{IN} = 0V to V_{CC}	—	10	—	5	µA
$\|I_{LO}\|$	Output Leakage Current	$\overline{CE}$ = V_{IH}, V_{OUT} = 0V to V_{CC}	—	10	—	5	µA
V_{OL}	Output Low Voltage	I_{OL} = +4mA	—	0.4	—	0.4	V
V_{OH}	Output High Voltage	I_{OH} = -4mA	2.4	—	2.4	—	V

3190 tbl 08

NOTE:
1. At Vcc ≤ 2.0V, Input leakages are undefined.

Output Loads and AC Test Conditions

Input Pulse Levels	GND to 3.0V
Input Rise/Fall Times	3ns Max.
Input Timing Reference Levels	1.5V
Output Reference Levels	1.5V
Output Load	Figures 1 and 2

3190 tbl 09

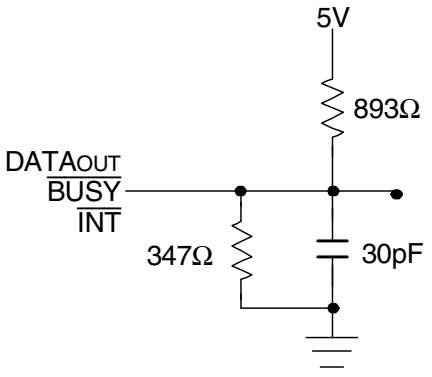

Figure 1. AC Output Test Load

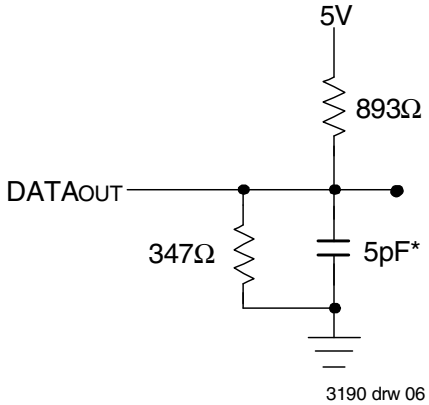

Figure 2. Output Test Load
(for t_{LZ}, t_{HZ}, t_{WZ}, t_{OW})
*Including scope and jig.

DC Electrical Characteristics Over the Operating Temperature and Supply Voltage Range[1] (con't.) (V_{CC} = 5.0V ± 10%)

Symbol	Parameter	Test Condition	Version		7016X12 Com'l Only Typ.[2]	7016X12 Com'l Only Max.	7016X15 Com'l Only Typ.[2]	7016X15 Com'l Only Max.	Unit
I_{CC}	Dynamic Operating Current (Both Ports Active)	$\overline{CE}$ = V_{IL}, Outputs Disabled $\overline{SEM}$ = V_{IH} f = f_{MAX}[3]	COM'L	S	170	325	170	310	mA
				L	170	275	170	260	
			MIL & IND	S	—	—	—	—	
				L	—	—	—	—	
I_{SB1}	Standby Current (Both Ports - TTL Level Inputs)	$\overline{CE}_R$ = $\overline{CE}_L$ = V_{IH} $\overline{SEM}_R$ = $\overline{SEM}_L$ = V_{IH} f = f_{MAX}[3]	COM'L	S	25	70	25	60	mA
				L	25	60	25	50	
			MIL & IND	S	—	—	—	—	
				L	—	—	—	—	
I_{SB2}	Standby Current (One Port - TTL Level Inputs)	$\overline{CE}_{"A"}$ = V_{IL} and $\overline{CE}_{"B"}$ = V_{IH}[5] Active Port Outputs Disabled, f=f_{MAX}[3] $\overline{SEM}_R$ = $\overline{SEM}_L$ = V_{IH}	COM'L	S	105	200	105	190	mA
				L	105	170	105	160	
			MIL & IND	S	—	—	—	—	
				L	—	—	—	—	
I_{SB3}	Full Standby Current (Both Ports - All CMOS Level Inputs)	Both Ports $\overline{CE}_L$ and $\overline{CE}_R$ ≥ V_{CC} - 0.2V V_{IN} ≥ V_{CC} - 0.2V or V_{IN} ≤ 0.2V, f = 0[4] $\overline{SEM}_R$ = $\overline{SEM}_L$ ≥ V_{CC} - 0.2V	COM'L	S	1.0	15	1.0	15	mA
				L	0.2	5	0.2	5	
			MIL & IND	S	—	—	—	—	
				L	—	—	—	—	
I_{SB4}	Full Standby Current (One Port - All CMOS Level Inputs)	$\overline{CE}_{"A"}$ ≤ 0.2V and $\overline{CE}_{"B"}$ ≥ V_{CC} - 0.2V[5] $\overline{SEM}_R$ = $\overline{SEM}_L$ ≥ V_{CC} - 0.2V V_{IN} ≥ V_{CC} - 0.2V or V_{IN} ≤ 0.2V Active Port Outputs Disabled f = f_{MAX}[3]	COM'L	S	100	180	100	170	mA
				L	100	150	100	140	
			MIL & IND	S	—	—	—	—	
				L	—	—	—	—	

3190 tbl 10

Symbol	Parameter	Test Condition	Version		7016X20 Com'l, Ind & Military Typ.[2]	7016X20 Com'l, Ind & Military Max.	7016X25 Com'l & Military Typ.[2]	7016X25 Com'l & Military Max.	7016X35 Com'l & Military Typ.[2]	7016X35 Com'l & Military Max.	Unit
I_{CC}	Dynamic Operating Current (Both Ports Active)	$\overline{CE}$ = V_{IL}, Outputs Disabled $\overline{SEM}$ = V_{IH} f = f_{MAX}[3]	COM'L	S	160	290	155	265	150	250	mA
				L	160	240	155	220	150	210	
			MIL & IND	S	160	380	155	340	150	300	
				L	160	310	155	280	150	250	
I_{SB1}	Standby Current (Both Ports - TTL Level Inputs)	$\overline{CE}_R$ = $\overline{CE}_L$ = V_{IH} $\overline{SEM}_R$ = $\overline{SEM}_L$ = V_{IH} f = f_{MAX}[3]	COM'L	S	20	60	16	60	13	60	mA
				L	20	50	16	50	13	50	
			MIL & IND	S	20	80	16	80	13	80	
				L	20	65	16	65	13	65	
I_{SB2}	Standby Current (One Port - TTL Level Inputs)	$\overline{CE}_{"A"}$ = V_{IL} and $\overline{CE}_{"B"}$ = V_{IH}[5] Active Port Outputs Disabled, f=f_{MAX}[3] $\overline{SEM}_R$ = $\overline{SEM}_L$ = V_{IH}	COM'L	S	95	180	90	170	85	155	mA
				L	95	150	90	140	85	130	
			MIL & IND	S	95	240	90	215	85	190	
				L	95	210	90	180	85	160	
I_{SB3}	Full Standby Current (Both Ports - All CMOS Level Inputs)	Both Ports $\overline{CE}_L$ and $\overline{CE}_R$ ≥ V_{CC} - 0.2V V_{IN} ≥ V_{CC} - 0.2V or V_{IN} ≤ 0.2V, f = 0[4] $\overline{SEM}_R$ = $\overline{SEM}_L$ ≥ V_{CC} - 0.2V	COM'L	S	1.0	15	1.0	15	1.0	15	mA
				L	0.2	5	0.2	5	0.2	5	
			MIL & IND	S	1.0	30	1.0	30	1.0	30	
				L	0.2	10	0.2	10	0.2	10	
I_{SB4}	Full Standby Current (One Port - All CMOS Level Inputs)	$\overline{CE}_{"A"}$ ≤ 0.2V and $\overline{CE}_{"B"}$ ≥ V_{CC} - 0.2V[5] $\overline{SEM}_R$ = $\overline{SEM}_L$ ≥ V_{CC} - 0.2V V_{IN} ≥ V_{CC} - 0.2V or V_{IN} ≤ 0.2V Active Port Outputs Disabled f = f_{MAX}[3]	COM'L	S	90	155	85	145	80	135	mA
				L	90	130	85	120	80	110	
			MIL & IND	S	90	230	85	200	80	175	
				L	90	200	85	170	80	150	

3190 tbl 11

NOTES:

1. 'X' in part numbers indicates power rating (S or L)
2. V_{CC} = 5V, T_A = +25°C, and are not production tested. I_{CCDC} = 120mA(typ.)
3. At f = f_{MAX}, address and I/Os are cycling at the maximum frequency read cycle of 1/t_{RC}.
4. f = 0 means no address or control lines change.
5. Port "A" may be either left or right port. Port "B" is the opposite of Port "A".

AC Electrical Characteristics Over the Operating Temperature and Supply Voltage Range[4]

Symbol	Parameter	7016X12 Com'l Only		7016X15 Com'l Only		Unit
		Min.	Max.	Min.	Max.	
READ CYCLE						
t_{RC}	Read Cycle Time	12	—	15	—	ns
t_{AA}	Address Access Time	—	12	—	15	ns
t_{ACE}	Chip Enable Access Time[3]	—	12	—	15	ns
t_{AOE}	Output Enable Access Time	—	8	—	10	ns
t_{OH}	Output Hold from Address Change	3	—	3	—	ns
t_{LZ}	Output Low-Z Time[1,2]	3	—	3	—	ns
t_{HZ}	Output High-Z Time[1,2]	—	10	—	10	ns
t_{PU}	Chip Enable to Power Up Time[2]	0	—	0	—	ns
t_{PD}	Chip Disable to Power Down Time[2]	—	12	—	15	ns
t_{SOP}	Semaphore Flag Update Pulse ($\overline{OE}$ or $\overline{SEM}$)	10	—	10	—	ns
t_{SAA}	Semaphore Address Access Time	—	12	—	15	ns

3190 tbl 12a

Symbol	Parameter	7016X20 Com'l, Ind & Military		7016X25 Com'l & Military		7016X35 Com'l & Military		Unit
		Min.	Max.	Min.	Max.	Min.	Max.	
READ CYCLE								
t_{RC}	Read Cycle Time	20	—	25	—	35	—	ns
t_{AA}	Address Access Time	—	20	—	25	—	35	ns
t_{ACE}	Chip Enable Access Time[3]	—	20	—	25	—	35	ns
t_{AOE}	Output Enable Access Time	—	12	—	13	—	20	ns
t_{OH}	Output Hold from Address Change	3	—	3	—	3	—	ns
t_{LZ}	Output Low-Z Time[1,2]	3	—	3	—	3	—	ns
t_{HZ}	Output High-Z Time[1,2]	—	12	—	15	—	20	ns
t_{PU}	Chip Enable to Power Up Time[2]	0	—	0	—	0	—	ns
t_{PD}	Chip Disable to Power Down Time[2]	—	20	—	25	—	35	ns
t_{SOP}	Semaphore Flag Update Pulse ($\overline{OE}$ or $\overline{SEM}$)	10	—	10	—	10	—	ns
t_{SAA}	Semaphore Address Access Time	—	20	—	25	—	35	ns

3190 tbl 12b

NOTES:
1. Transition is measured 0mV from Low- or High-impedance voltage with Output Test Load (Figure 2).
2. This parameter is guaranteed by device characterization but not production tested.
3. To access RAM, $\overline{CE}$ = V_{IL} and $\overline{SEM}$ = V_{IH}. To access semaphore, $\overline{CE}$ = V_{IH} and $\overline{SEM}$ = V_{IL}.
4. 'X' in part numbers indicates power rating (S or L).

Waveform of Read Cycles(5)

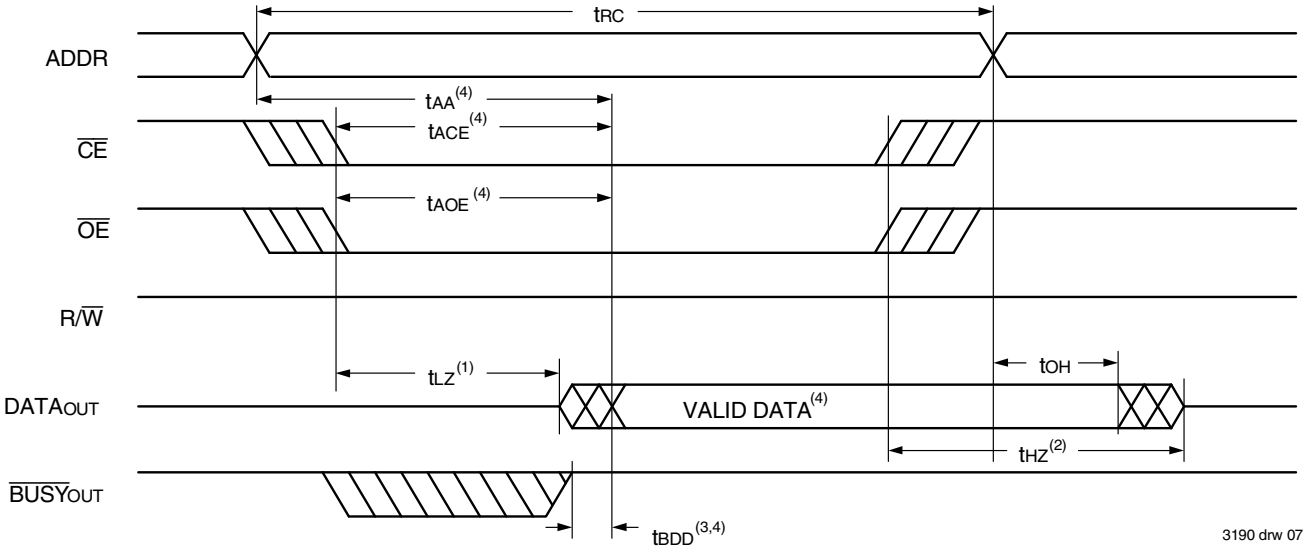

NOTES:
1. Timing depends on which signal is asserted last, $\overline{OE}$ or $\overline{CE}$.
2. Timing depends on which signal is de-asserted first, $\overline{CE}$ or $\overline{OE}$.
3. t_{BDD} delay is required only in cases where the opposite port is completing a write operation to the same address location. For simultaneous read operations $\overline{BUSY}$ has no relation to valid output data.
4. Start of valid data depends on which timing becomes effective last: t_{AOE}, t_{ACE}, t_{AA} or t_{BDD}.
5. $\overline{SEM} = V_{IH}$.

Timing of Power-Up / Power-Down

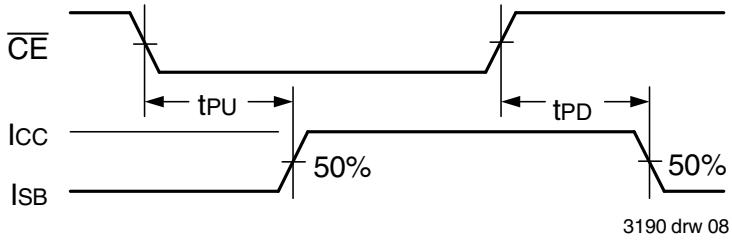

AC Electrical Characteristics Over the Operating Temperature and Supply Voltage[5]

Symbol	Parameter	7016X12 Com'l Only		7016X15 Com'l Only		Unit
		Min.	Max.	Min.	Max.	
WRITE CYCLE						
t_{WC}	Write Cycle Time	12	—	15	—	ns
t_{EW}	Chip Enable to End-of-Write[3]	10	—	12	—	ns
t_{AW}	Address Valid to End-of-Write	10	—	12	—	ns
t_{AS}	Address Set-up Time[3]	0	—	0	—	ns
t_{WP}	Write Pulse Width	10	—	12	—	ns
t_{WR}	Write Recovery Time	2	—	2	—	ns
t_{DW}	Data Valid to End-of-Write	10	—	10	—	ns
t_{HZ}	Output High-Z Time[1,2]	—	10	—	10	ns
t_{DH}	Data Hold Time[4]	0	—	0	—	ns
t_{WZ}	Write Enable to Output in High-Z[1,2]	—	10	—	10	ns
t_{OW}	Output Active from End-of-Write[1,2,4]	3	—	3	—	ns
t_{SWRD}	$\overline{SEM}$ Flag Write to Read Time	5	—	5	—	ns
t_{SPS}	$\overline{SEM}$ Flag Contention Window	5	—	5	—	ns

3190 tbl 13a

Symbol	Parameter	7016X20 Com'l, Ind & Military		7016X25 Com'l & Military		7016X35 Com'l & Military		Unit
		Min.	Max.	Min.	Max.	Min.	Max.	
WRITE CYCLE								
t_{WC}	Write Cycle Time	20	—	25	—	35	—	ns
t_{EW}	Chip Enable to End-of-Write[3]	15	—	20	—	30	—	ns
t_{AW}	Address Valid to End-of-Write	15	—	20	—	30	—	ns
t_{AS}	Address Set-up Time[3]	0	—	0	—	0	—	ns
t_{WP}	Write Pulse Width	15	—	20	—	25	—	ns
t_{WR}	Write Recovery Time	2	—	2	—	2	—	ns
t_{DW}	Data Valid to End-of-Write	15	—	15	—	15	—	ns
t_{HZ}	Output High-Z Time[1,2]	—	12	—	15	—	20	ns
t_{DH}	Data Hold Time[4]	0	—	0	—	0	—	ns
t_{WZ}	Write Enable to Output in High-Z[1,2]	—	12	—	15	—	20	ns
t_{OW}	Output Active from End-of-Write[1,2,4]	3	—	3	—	3	—	ns
t_{SWRD}	$\overline{SEM}$ Flag Write to Read Time	5	—	5	—	5	—	ns
t_{SPS}	$\overline{SEM}$ Flag Contention Window	5	—	5	—	5	—	ns

3190 tbl 13b

NOTES:

1. Transition is measured 0mV from Low or High-impedance voltage with the Output Test Load (Figure 2).
2. This parameter is guaranteed by device characterization but not production tested.
3. To access RAM, $\overline{CE}$ = V_{IL} and $\overline{SEM}$ = V_{IH}. To access semaphore, $\overline{CE}$ = V_{IH} and $\overline{SEM}$ = V_{IL}. Either condition must be valid for the entire t_{EW} time.
4. The specification for t_{DH} must be met by the device supplying write data to the RAM under all operating conditions. Although t_{DH} and t_{OW} values will vary over voltage and temperature, the actual t_{DH} will always be smaller than the actual t_{OW}.
5. 'X' in part numbers indicates power rating (S or L).

Timing Waveform of Write Cycle No. 1, R/$\overline{W}$ Controlled Timing(1,5,8)

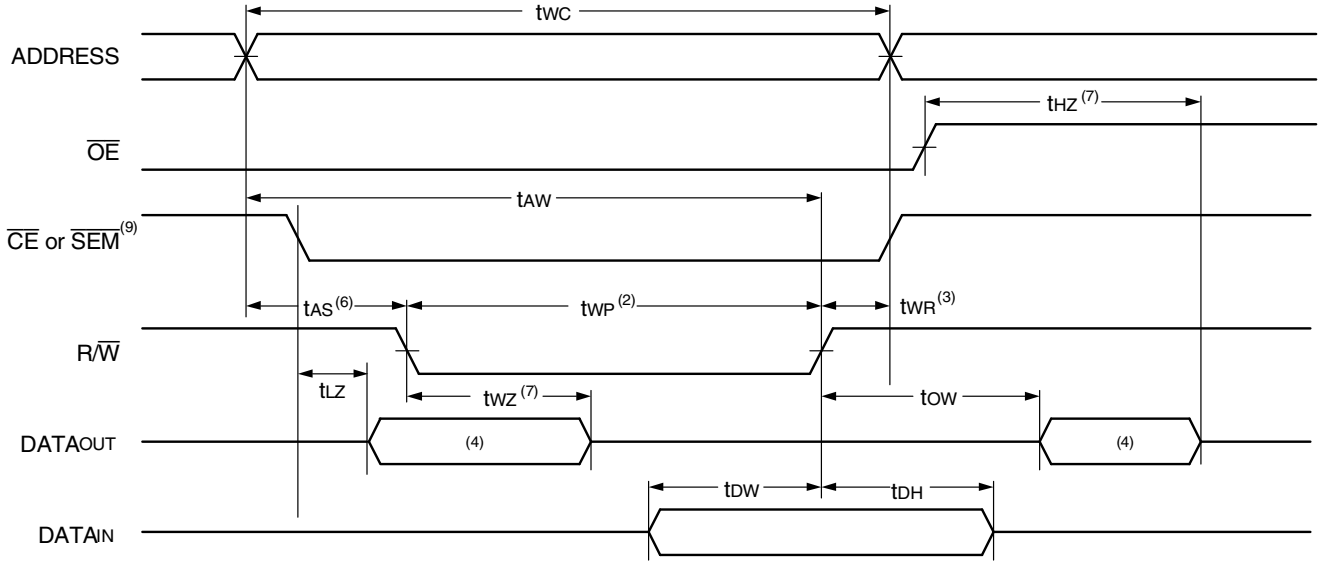

3190 drw 09

Timing Waveform of Write Cycle No. 2, $\overline{CE}$ Controlled Timing(1,5)

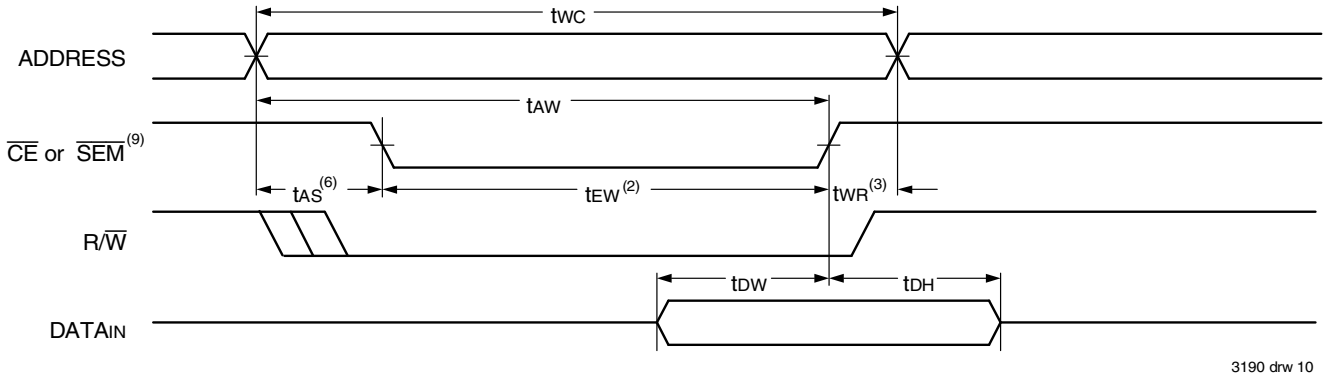

3190 drw 10

NOTES:
1. R/$\overline{W}$ or $\overline{CE}$ must be HIGH during all address transitions.
2. A write occurs during the overlap (t_{EW} or t_{WP}) of a LOW $\overline{CE}$ and a LOW R/$\overline{W}$ for memory array writing cycle.
3. t_{WR} is measured from the earlier of $\overline{CE}$ or R/$\overline{W}$ (or $\overline{SEM}$ or R/$\overline{W}$) going HIGH to the end of write cycle.
4. During this period, the I/O pins are in the output state and input signals must not be applied.
5. If the $\overline{CE}$ or $\overline{SEM}$ LOW transition occurs simultaneously with or after the R/$\overline{W}$ LOW transition, the outputs remain in the High-impedance state.
6. Timing depends on which enable signal is asserted last, $\overline{CE}$ or R/$\overline{W}$.
7. This parameter is guaranteed by device characterization but is not production tested. Transition is measured 0mV from steady state with the Output Test Load (Figure 2).
8. If $\overline{OE}$ is LOW during R/$\overline{W}$ controlled write cycle, the write pulse width must be the larger of t_{WP} or (t_{WZ} + t_{DW}) to allow the I/O drivers to turn off and data to be placed on the bus for the required t_{DW}. If $\overline{OE}$ is HIGH during an R/$\overline{W}$ controlled write cycle, this requirement does not apply and the write pulse can be as short as the specified t_{WP}.
9. To access RAM, $\overline{CE}$ = V_{IL} and $\overline{SEM}$ = V_{IH}. To access Semaphore, $\overline{CE}$ = V_{IH} and $\overline{SEM}$ = V_{IL}. t_{EW} must be met for either condition.

Timing Waveform of Semaphore Read after Write Timing, Either Side[1]

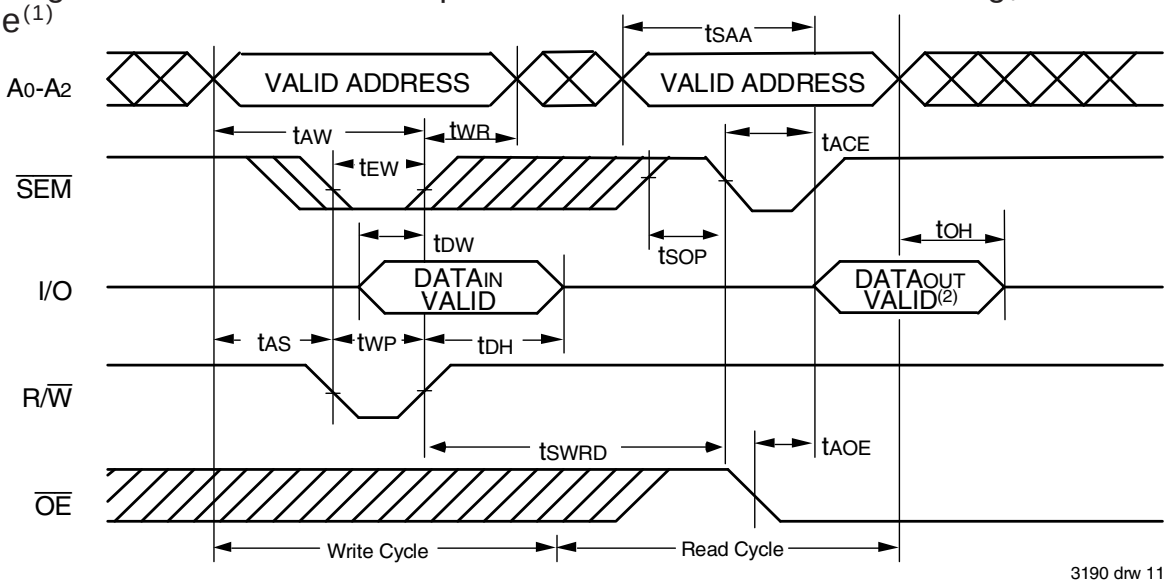

NOTES:
1. $\overline{CE}$ = VIH for the duration of the above timing (both write and read cycle).
2. "DATAOUT VALID" represents all I/O's (I/O0-I/O8) equal to the semaphore value.

Timing Waveform of Semaphore Write Condition[1,3,4]

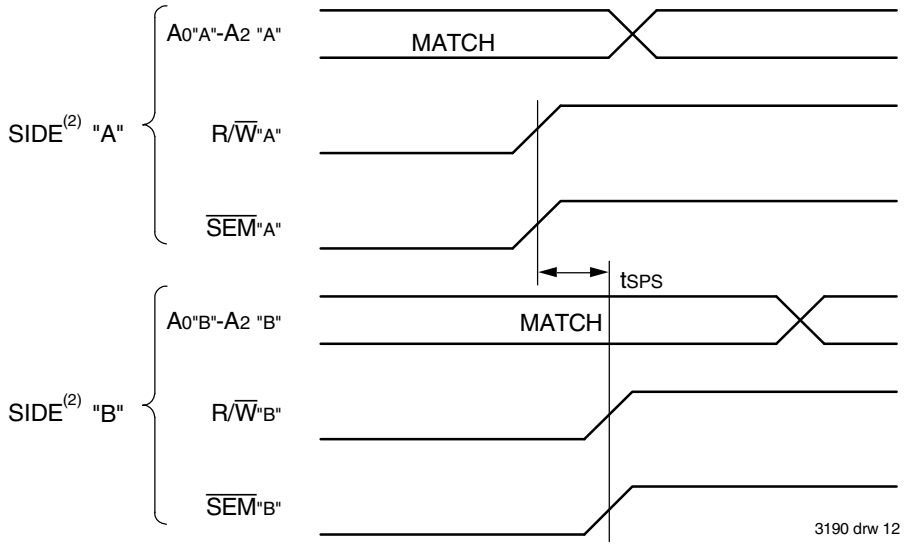

NOTES:
1. DOR = DOL = VIH, $\overline{CE}_R$ = $\overline{CE}_L$ = VIH.
2. All timing is the same for left and right ports. Port "A" may be either left or right port. "B" is the opposite port from "A".
3. This parameter is measured from R/$\overline{W}$"A" or $\overline{SEM}$"A" going HIGH to R/$\overline{W}$"B" or $\overline{SEM}$"B" going HIGH.
4. If tSPS is not satisfied, there is no guarantee which side will obtain the semaphore flag.

AC Electrical Characteristics Over the Operating Temperature and Supply Voltage Range(6)

Symbol	Parameter	7016X12 Com'l Only		7016X15 Com'l Only		Unit
		Min.	Max.	Min.	Max.	
$\overline{BUSY}$ TIMING (M/$\overline{S}$ = V_{IH})						
t_{BAA}	$\overline{BUSY}$ Access Time from Address Match	—	12	—	15	ns
t_{BDA}	$\overline{BUSY}$ Disable Time from Address Not Matched	—	12	—	15	ns
t_{BAC}	$\overline{BUSY}$ Access Time from Chip Enable Low	—	12	—	15	ns
t_{BDC}	$\overline{BUSY}$ Disable Time from Chip Enable High	—	12	—	15	ns
t_{APS}	Arbitration Priority Set-up Time(2)	5	—	5	—	ns
t_{BDD}	$\overline{BUSY}$ Disable to Valid Data(3)	—	15	—	18	ns
t_{WH}	Write Hold After $\overline{BUSY}$(5)	11	—	13	—	ns
$\overline{BUSY}$ INPUT TIMING (M/$\overline{S}$ = V_{IL})						
t_{WB}	$\overline{BUSY}$ Input to Write(4)	0	—	0	—	ns
t_{WH}	Write Hold After $\overline{BUSY}$(5)	11	—	13	—	ns
PORT-TO-PORT DELAY TIMING						
t_{WDD}	Write Pulse to Data Delay(1)	—	25	—	30	ns
t_{DDD}	Write Data Valid to Read Data Delay(1)	—	20	—	25	ns

3190 tbl 14a

Symbol	Parameter	7016X20 Com'l, Ind & Military		7016X25 Com'l & Military		7016X35 Com'l & Military		Unit
		Min.	Max.	Min.	Max.	Min.	Max.	
$\overline{BUSY}$ TIMING (M/$\overline{S}$ = V_{IH})								
t_{BAA}	$\overline{BUSY}$ Access Time from Address Match	—	20	—	20	—	20	ns
t_{BDA}	$\overline{BUSY}$ Disable Time from Address Not Matched	—	20	—	20	—	20	ns
t_{BAC}	$\overline{BUSY}$ Access Time from Chip Enable Low	—	20	—	20	—	20	ns
t_{BDC}	$\overline{BUSY}$ Disable Time from Chip Enable High	—	17	—	17	—	20	ns
t_{APS}	Arbitration Priority Set-up Time(2)	5	—	5	—	5	—	ns
t_{BDD}	$\overline{BUSY}$ Disable to Valid Data(3)	—	30	—	30	—	35	ns
t_{WH}	Write Hold After $\overline{BUSY}$(5)	15	—	17	—	25	—	ns
$\overline{BUSY}$ INPUT TIMING (M/$\overline{S}$ = V_{IL})								
t_{WB}	$\overline{BUSY}$ Input to Write(4)	0	—	0	—	0	—	ns
t_{WH}	Write Hold After $\overline{BUSY}$(5)	15	—	17	—	25	—	ns
PORT-TO-PORT DELAY TIMING								
t_{WDD}	Write Pulse to Data Delay(1)	—	45	—	50	—	60	ns
t_{DDD}	Write Data Valid to Read Data Delay(1)	—	30	—	35	—	45	ns

3190 tbl 14b

NOTES:
1. Port-to-port delay through RAM cells from writing port to reading port, refer to "Timing Waveformof Write with Port-to-Port Read and $\overline{BUSY}$ (M/$\overline{S}$ = V_{IH})".
2. To ensure that the earlier of the two ports wins.
3. t_{BDD} is a calculated parameter and is the greater of 0, $t_{WDD} - t_{WP}$ (actual) or $t_{DDD} - t_{DW}$ (actual).
4. To ensure that the write cycle is inhibited on Port "B" during contention on Port "A".
5. To ensure that a write cycle is completed on Port "B" after contention on Port "A".
6. 'X' in part numbers indicates power rating (S or L).

Timing Waveform of Read with $\overline{BUSY}$ (2,4,5) (M/$\overline{S}$ = VIH)

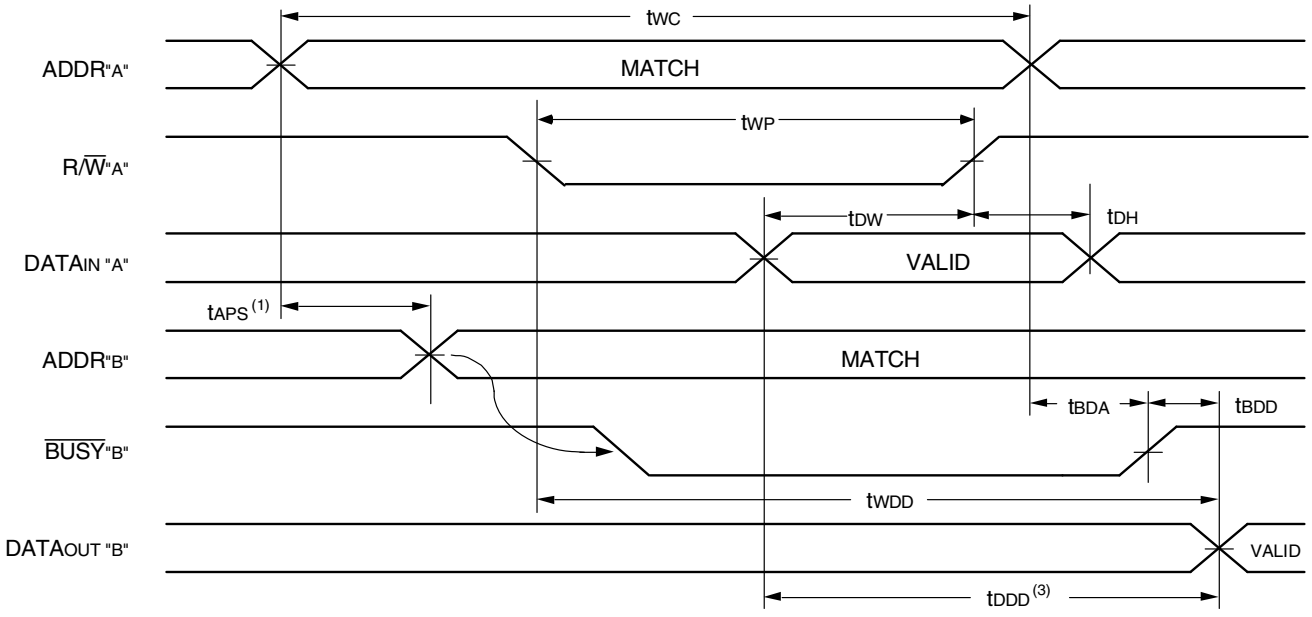

3190 drw 13

NOTES:
1. To ensure that the earlier of the two ports wins. tAPS is ignored for M/$\overline{S}$=VIL.
2. $\overline{CE}_L$ = $\overline{CE}_R$ = VIL.
3. $\overline{OE}$ = VIL for the reading port.
4. If M/$\overline{S}$=VIL (SLAVE), $\overline{BUSY}$ is an input. Then for this example $\overline{BUSY}_{"A"}$ = VIH and $\overline{BUSY}_{"B"}$ input is shown above.
5. All timing is the same for left and right ports. Port "A" may be either the left or right port. Port "B" is the port opposite from Port "A".

Timing Waveform of Write with $\overline{BUSY}$ (3)

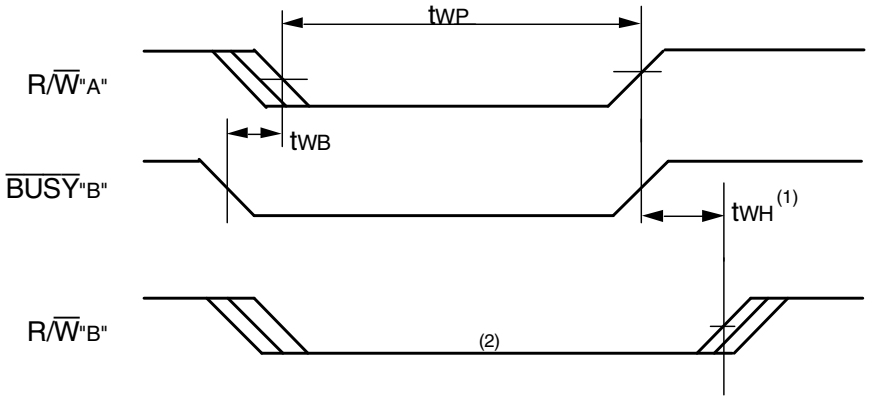

3190 drw 14

NOTES:
1. tWH must be met for both $\overline{BUSY}$ input (SLAVE) and output (MASTER).
2. $\overline{BUSY}$ is asserted on port "B" blocking $R/\overline{W}_{"B"}$, until $\overline{BUSY}_{"B"}$ goes HIGH.
3. All timing is the same for left and right ports. Port "A" may be either the left or right port. Port "B" is the port opposite from Port "A".

Waveform of $\overline{BUSY}$ Arbitration Controlled by $\overline{CE}$ Timing(1) (M/$\overline{S}$ = VIH)

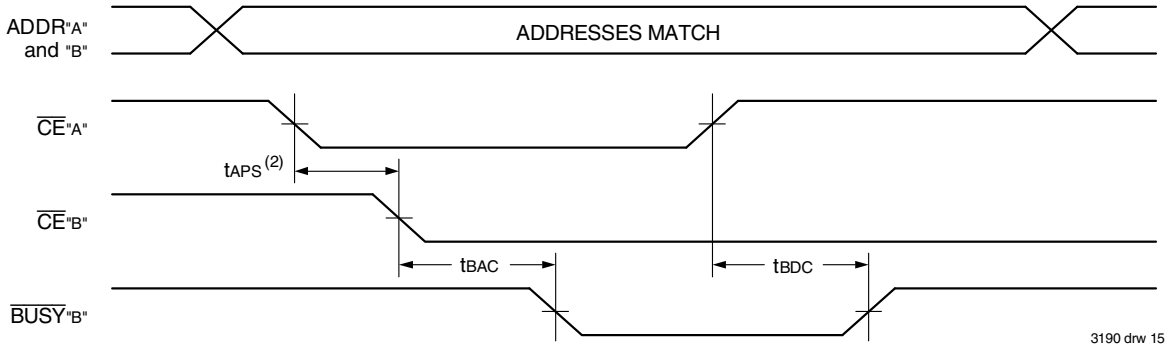

Waveform of $\overline{BUSY}$ Arbitration Cycle Controlled by Address Match Timing(1) (M/$\overline{S}$ = VIH)

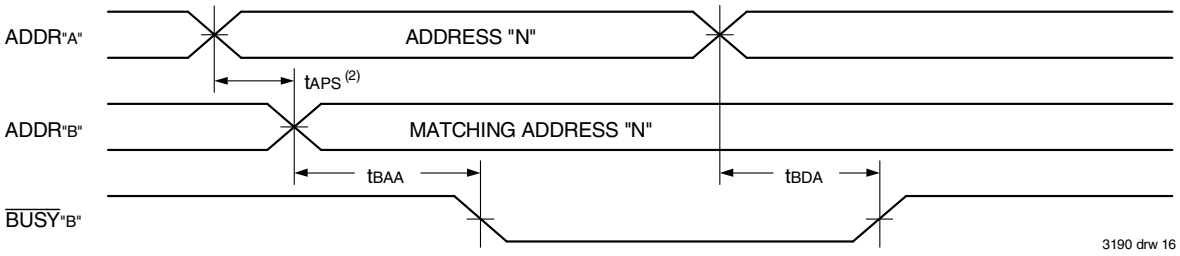

NOTES:
1. All timing is the same for left and right ports. Port "A" may be either the left or right port. Port "B" is the port opposite from "A".
2. If tAPS is not satisfied, the $\overline{BUSY}$ signal will be asserted on one side or another but there is no guarantee on which side $\overline{BUSY}$ will be asserted.

AC Electrical Characteristics Over the Operating Temperature and Supply Voltage Range(1)

Symbol	Parameter	7016X12 Com'l Only		7016X15 Com'l Only		Unit
		Min.	Max.	Min.	Max.	
INTERRUPT TIMING						
tAS	Address Set-up Time	0	—	0	—	ns
tWR	Write Recovery Time	0	—	0	—	ns
tINS	Interrupt Set Time	—	12	—	15	ns
tINR	Interrupt Reset Time	—	12	—	15	ns

3190 tbl 15a

Symbol	Parameter	7016X20 Com'l, Ind & Military		7016X25 Com'l & Military		7016X35 Com'l & Military		Unit
		Min.	Max.	Min.	Max.	Min.	Max.	
INTERRUPT TIMING								
tAS	Address Set-up Time	0	—	0	—	0	—	ns
tWR	Write Recovery Time	0	—	0	—	0	—	ns
tINS	Interrupt Set Time	—	20	—	20	—	25	ns
tINR	Interrupt Reset Time	—	20	—	20	—	25	ns

3190 tbl 15b

NOTE:
1. 'X' in part numbers indicates power rating (S or L).

Waveform of Interrupt Timing(1)

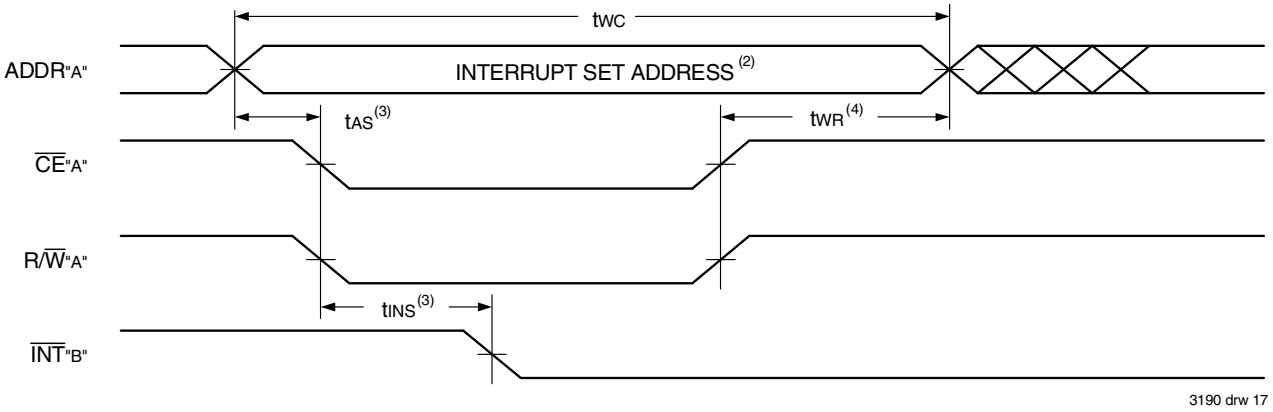

3190 drw 17

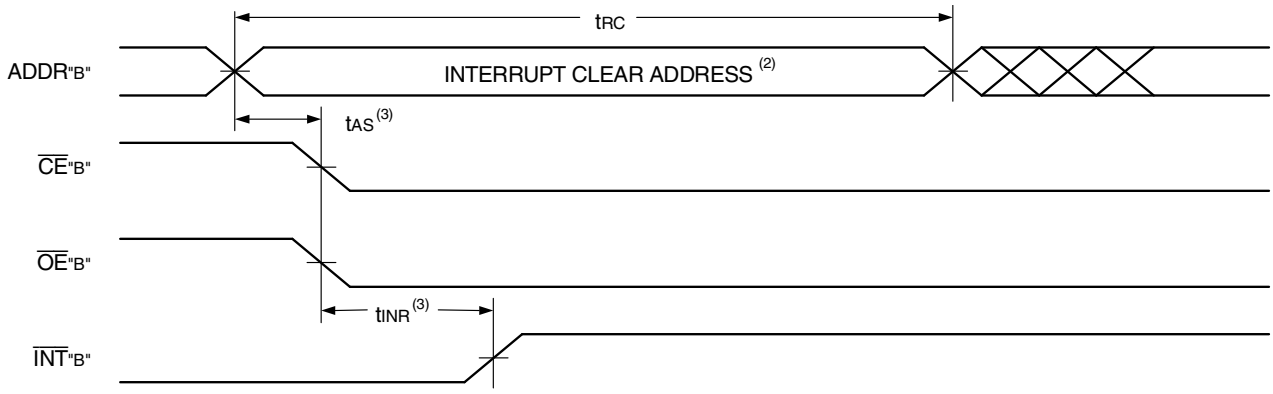

3190 drw 18

NOTES:
1. All timing is the same for left and right ports. Port "A" may be either the left or right port. Port "B" is the port opposite from "A".
2. See Interrupt truth table.
3. Timing depends on which enable signal ($\overline{CE}$ or R/$\overline{W}$) is asserted last.
4. Timing depends on which enable signal ($\overline{CE}$ or R/$\overline{W}$) is de-asserted first.

Truth Table III — Interrupt Flag(1)

Left Port					Right Port					
R/$\overline{W}_L$	$\overline{CE}_L$	$\overline{OE}_L$	A_{13L}-A_{0L}	$\overline{INT}_L$	R/$\overline{W}_R$	$\overline{CE}_R$	$\overline{OE}_R$	A_{13R}-A_{0R}	$\overline{INT}_R$	Function
L	L	X	3FFF	X	X	X	X	X	L(2)	Set Right $\overline{INT}_R$ Flag
X	X	X	X	X	X	L	L	3FFF	H(3)	Reset Right $\overline{INT}_R$ Flag
X	X	X	X	L(3)	L	L	X	3FFE	X	Set Left $\overline{INT}_L$ Flag
X	L	L	3FFE	H(2)	X	X	X	X	X	Reset Left $\overline{INT}_L$ Flag

3190 tbl 16

NOTES:
1. Assumes $\overline{BUSY}_L = \overline{BUSY}_R = V_{IH}$.
2. If $\overline{BUSY}_L = V_{IL}$, then no change.
3. If $\overline{BUSY}_R = V_{IL}$, then no change.

Truth Table IV — Address $\overline{\text{BUSY}}$ Arbitration

Inputs			Outputs		
$\overline{CE}_L$	$\overline{CE}_R$	A_{OL}-A_{13L} A_{OR}-A_{13R}	$\overline{BUSY}_L$(1)	$\overline{BUSY}_R$(1)	Function
X	X	NO MATCH	H	H	Normal
H	X	MATCH	H	H	Normal
X	H	MATCH	H	H	Normal
L	L	MATCH	(2)	(2)	Write Inhibit(3)

3190 tbl 17

NOTES:
1. Pins $\overline{BUSY}_L$ and $\overline{BUSY}_R$ are both outputs when the part is configured as a master. Both are inputs when configured as a slave. $\overline{BUSY}_X$ outputs on the IDT7016 are push-pull, not open drain outputs. On slaves the $\overline{BUSY}_X$ input internally inhibits writes.
2. "L" if the inputs to the opposite port were stable prior to the address and enable inputs of this port. "H" if the inputs to the opposite port became stable after the address and enable inputs of this port. If t_{APS} is not met, either $\overline{BUSY}_L$ or $\overline{BUSY}_R$ = LOW will result. $\overline{BUSY}_L$ and $\overline{BUSY}_R$ outputs can not be LOW simultaneously.
3. Writes to the left port are internally ignored when $\overline{BUSY}_L$ outputs are driving LOW regardless of actual logic level on the pin. Writes to the right port are internally ignored when $\overline{BUSY}_R$ outputs are driving LOW regardless of actual logic level on the pin.

Truth Table V — Example of Semaphore Procurement Sequence(1,2,3)

Functions	D_0 - D_8 Left	D_0 - D_8 Right	Status
No Action	1	1	Semaphore free
Left Port Writes "0" to Semaphore	0	1	Left port has semaphore token
Right Port Writes "0" to Semaphore	0	1	No change. Right side has no write access to semaphore
Left Port Writes "1" to Semaphore	1	0	Right port obtains semaphore token
Left Port Writes "0" to Semaphore	1	0	No change. Left port has no write access to semaphore
Right Port Writes "1" to Semaphore	0	1	Left port obtains semaphore token
Left Port Writes "1" to Semaphore	1	1	Semaphore free
Right Port Writes "0" to Semaphore	1	0	Right port has semaphore token
Right Port Writes "1" to Semaphore	1	1	Semaphore free
Left Port Writes "0" to Semaphore	0	1	Left port has semaphore token
Left Port Writes "1" to Semaphore	1	1	Semaphore free

3190 tbl 18

NOTES:
1. This table denotes a sequence of events for only one of the eight semaphores on the IDT7016.
2. There are eight semaphore flags written to via I/O_0 and read from all I/O_s (I/O_0 - I/O_8). These eight semaphores are addressed by A_0 - A_2.
e. $\overline{CE}$ = V_{IH}, $\overline{SEM}$ = V_{IL} to access the semaphores. Refer to the semaphore Read/Write Truth Table.

Functional Description

The IDT7016 provides two ports with separate control, address and I/O pins that permit independent access for reads or writes to any location in memory. The IDT7016 has an automatic power down feature controlled by $\overline{CE}$. The $\overline{CE}$ controls on-chip power down circuitry that permits the respective port to go into a standby mode when not selected ($\overline{CE}$ HIGH). When a port is enabled, access to the entire memory array is permitted.

Interrupts

If the user chooses the interrupt function, a memory location (mail box or message center) is assigned to each port. The left port interrupt flag ($\overline{INT}_L$) is asserted when the right port writes to memory location 3FFE where a write is defined as the $\overline{CE}$ = R/$\overline{W}$ = V_{IL} per Truth Table III. The left port clears the interrupt by an address location 3FFE access when $\overline{CE}_R$ =$\overline{OE}_R$ =V_{IL}, R/$\overline{W}$ is a "don't care". Likewise, the right port interrupt flag (INT_R) is asserted when the left port writes to memory location 3FFF and to clear the interrupt flag (INT_R), the right port must access memory location 3FFF. The message (9 bits) at 3FFE or 3FFF is user-defined since it is in an addressable SRAM location. If the interrupt function is not used, address locations 3FFE and 3FFF are not used as mail boxes but are still part of the random access memory. Refer to Truth Table III for the interrupt operation.

Busy Logic

Busy Logic provides a hardware indication that both ports of the RAM have accessed the same location at the same time. It also allows one of the two accesses to proceed and signals the other side that the RAM is "busy". The $\overline{BUSY}$ pin can then be used to stall the access until the operation on the other side is completed. If a write operation has been attempted from the side that receives a $\overline{BUSY}$ indication, the write signal is gated internally to prevent the write from proceeding.

The use of $\overline{BUSY}$ logic is not required or desirable for all applications. In some cases it may be useful to logically OR the $\overline{BUSY}$ outputs together and use any $\overline{BUSY}$ indication as an interrupt source to flag the event of an illegal or illogical operation. If the write inhibit function of $\overline{BUSY}$ logic is not desirable, the $\overline{BUSY}$ logic can be disabled by placing the part in slave mode with the M/$\overline{S}$ pin. Once in slave mode the $\overline{BUSY}$ pin operates solely as a write inhibit input pin. Normal operation can be programmed by tying the $\overline{BUSY}$ pins HIGH. If desired, unintended write operations can be prevented to a port by tying the $\overline{BUSY}$ pin for that port LOW.

The $\overline{BUSY}$ outputs on the IDT7016 RAM in master mode, are push-pull type outputs and do not require pull up resistors to operate. If these RAMs are being expanded in depth, then the $\overline{BUSY}$ indication for the resulting array requires the use of an external AND gate.

Width Expansion Busy Logic Master/Slave Arrays

When expanding an IDT7016 RAM array in width while using $\overline{BUSY}$ logic, one master part is used to decide which side of the RAM array will receive a $\overline{BUSY}$ indication, and to output that indication. Any number of slaves to be addressed in the same address range as the master use the $\overline{BUSY}$ signal as a write inhibit signal. Thus on the IDT7016 RAM the $\overline{BUSY}$ pin is an output if the part is used as a master (M/$\overline{S}$ pin = H), and the $\overline{BUSY}$ pin is an input if the part used as a slave (M/$\overline{S}$ pin = L) as shown in Figure 3.

If two or more master parts were used when expanding in width, a split decision could result with one master indicating $\overline{BUSY}$ on one side of the array and another master indicating $\overline{BUSY}$ on one other side of the array. This would inhibit the write operations from one port for part of a word and inhibit the write operations from the other port for the other part of the word.

The $\overline{BUSY}$ arbitration, on a master, is based on the chip enable and address signals only. It ignores whether an access is a read or write. In a master/slave array, both address and chip enable must be valid long enough for a $\overline{BUSY}$ flag to be output from the master before the actual write pulse can be initiated with the R/$\overline{W}$ signal. Failure to observe this timing can result in a glitched internal write inhibit signal and corrupted data in the slave.

Semaphores

The IDT7016 are extremely fast Dual-Port 16Kx9 Static RAMs with an additional 8 address locations dedicated to binary semaphore flags. These flags allow either processor on the left or right side of the Dual-Port RAM to claim a privilege over the other processor for functions defined by the system designer's software. As an example, the semaphore can be used by one processor to inhibit the other from accessing a portion of the Dual-Port RAM or any other shared resource.

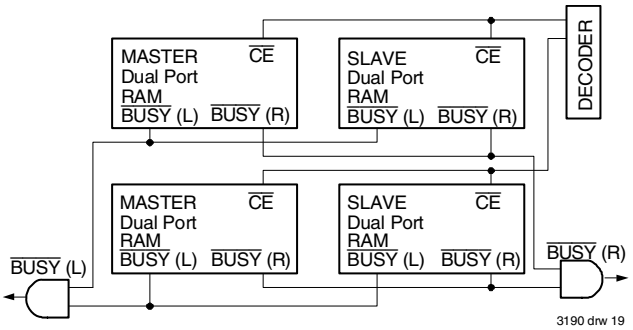

Figure 3. Busy and chip enable routing for both width and depth expansion with IDT7016 RAMs.

The Dual-Port RAM features a fast access time, and both ports are completely independent of each other. This means that the activity on the left port in no way slows the access time of the right port. Both ports are identical in function to standard CMOS Static RAM and can be read from, or written to, at the same time with the only possible conflict arising from the simultaneous writing of, or a simultaneous READ/WRITE of, a non-semaphore location. Semaphores are protected against such ambiguous situations and may be used by the system program to avoid any conflicts in the non-semaphore portion of the Dual-Port RAM. These devices have an automatic power-down feature controlled by $\overline{CE}$, the Dual-Port RAM enable, and $\overline{SEM}$, the semaphore enable. The $\overline{CE}$ and $\overline{SEM}$ pins control on-chip power down circuitry that permits the respective port to go into standby mode when not selected. This is the condition which is shown in Truth Table I where $\overline{CE}$ and $\overline{SEM}$ are both HIGH.

Systems which can best use the IDT7016 contain multiple processors or controllers and are typically very high-speed systems which are software controlled or software intensive. These systems can benefit from a performance increase offered by the IDT7016's hardware semaphores, which provide a lockout mechanism without requiring complex programming.

Software handshaking between processors offers the maximum in system flexibility by permitting shared resources to be allocated in varying configurations. The IDT7016 does not use its semaphore flags to control any resources through hardware, thus allowing the system designer total flexibility in system architecture.

An advantage of using semaphores rather than the more common methods of hardware arbitration is that wait states are never incurred in either processor. This can prove to be a major advantage in very high-speed systems.

How the Semaphore Flags Work

The semaphore logic is a set of eight latches which are independent of the Dual-Port RAM. These latches can be used to pass a flag, or token, from one port to the other to indicate that a shared resource is in use. The semaphores provide a hardware assist for a use assignment method called "Token Passing Allocation." In this method, the state of a semaphore latch is used as a token indicating that shared resource is in use. If the left processor wants to use this

resource, it requests the token by setting the latch. This processor then verifies its success in setting the latch by reading it. If it was successful, it proceeds to assume control over the shared resource. If it was not successful in setting the latch, it determines that the right side processor has set the latch first, has the token and is using the shared resource. The left processor can then either repeatedly request that semaphore's status or remove its request for that semaphore to perform another task and occasionally attempt again to gain control of the token via the set and test sequence. Once the right side has relinquished the token, the left side should succeed in gaining control.

The semaphore flags are active LOW. A token is requested by writing a zero into a semaphore latch and is released when the same side writes a one to that latch.

The eight semaphore flags reside within the IDT7016 in a separate memory space from the Dual-Port RAM. This address space is accessed by placing a LOW input on the $\overline{SEM}$ pin (which acts as a chip select for the semaphore flags) and using the other control pins (Address, $\overline{OE}$, and R/$\overline{W}$) as they would be used in accessing a standard static RAM. Each of the flags has a unique address which can be accessed by either side through address pins A_0 – A_2. When accessing the semaphores, none of the other address pins has any effect.

When writing to a semaphore, only data pin D_0 is used. If a low level is written into an unused semaphore location, that flag will be set to a zero on that side and a one on the other side (see Truth Table V). That semaphore can now only be modified by the side showing the zero. When a one is written into the same location from the same side, the flag will be set to a one for both sides (unless a semaphore request from the other side is pending) and then can be written to by both sides. The fact that the side which is able to write a zero into a semaphore subsequently locks out writes from the other side is what makes semaphore flags useful in interprocessor communications. (A thorough discussion on the use of this feature follows shortly.) A zero written into the same location from the other side will be stored in the semaphore request latch for that side until the semaphore is freed by the first side.

When a semaphore flag is read, its value is spread into all data bits so that a flag that is a one reads as a one in all data bits and a flag containing a zero reads as all zeros. The read value is latched into one side's output register when that side's semaphore select ($\overline{SEM}$) and output enable ($\overline{OE}$) signals go active. This serves to disallow the semaphore from changing state in the middle of a read cycle due to a write cycle from the other side. Because of this latch, a repeated read of a semaphore in a test loop must cause either signal ($\overline{SEM}$ or $\overline{OE}$) to go inactive or the output will never change.

A sequence WRITE/READ must be used by the semaphore in order to guarantee that no system level contention will occur. A processor requests access to shared resources by attempting to write a zero into a semaphore location. If the semaphore is already in use, the semaphore request latch will contain a zero, yet the semaphore flag will appear as one, a fact which the processor will verify by the subsequent read (see Truth Table V). As an example, assume a processor writes a zero to the left port at a free semaphore location. On a subsequent read, the processor will verify that it has written successfully to that location and will assume control over the resource in question. Meanwhile, if a processor on the right side attempts to write a zero to the same semaphore flag it will fail, as will be verified by the fact that a one will be read from that semaphore on the right side during subsequent read. Had a sequence of READ/WRITE been used instead, system contention problems could have occurred during the gap between the read and write cycles.

It is important to note that a failed semaphore request must be followed by either repeated reads or by writing a one into the same location. The reason for this is easily understood by looking at the simple logic diagram of the semaphore flag in Figure 4.Two semaphore request latches feed into a semaphore flag. Whichever latch is first to present a zero to the semaphore flag will force its side of the semaphore flag LOW and the other side HIGH. This condition will continue until a one is written to the same semaphore request latch. Should the other side's semaphore request latch have been written to a zero in the meantime, the semaphore flag will flip over to the other side as soon as a one is written into the first side's request latch. The second side's flag will now stay LOW until its semaphore request latch is written to a one. From this it is easy to understand that, if a semaphore is requested and the processor which requested it no longer needs the resource, the entire system can hang up until a one is written into that semaphore request latch.

The critical case of semaphore timing is when both sides request a single token by attempting to write a zero into it at the same time. The semaphore logic is specially designed to resolve this problem. If simultaneous requests are made, the logic guarantees that only one side receives the token. If one side is earlier than the other in making the request, the first side to make the request will receive the token. If both requests arrive at the same time, the assignment will be arbitrarily made to one port or the other.

One caution that should be noted when using semaphores is that semaphores alone do not guarantee that access to a resource is secure. As with any powerful programming technique, if semaphores are misused or misinterpreted, a software error can easily happen.

Initialization of the semaphores is not automatic and must be handled via the initialization program at power-up. Since any semaphore request flag which contains a zero must be reset to a one, all semaphores on both sides should have a one written into them at initialization from both sides to assure that they will be free when needed.

Using Semaphores-Some Examples

Perhaps the simplest application of semaphores is their application as resource markers for the IDT7016's Dual-Port RAM. Say the 16K x 9 RAM was to be divided into two 8K x 9 blocks which were to be dedicated at any one time to servicing either the left or right port. Semaphore 0 could be used to indicate the side which would control the lower section of memory, and Semaphore 1 could be defined as the indicator for the upper section of memory.

To take a resource, in this example the lower 8K of Dual-Port RAM, the processor on the left port could write and then read a zero in to Semaphore 0. If this task were successfully completed (a zero was read back rather than a one), the left processor would assume control of the lower 8K. Meanwhile the right processor was attempt-

ing to gain control of the resource after the left processor, it would read back a one in response to the zero it had attempted to write into Semaphore 0. At this point, the software could choose to try and gain control of the second 8K section by writing, then reading a zero into Semaphore 1. If it succeeded in gaining control, it would lock out the left side.

Once the left side was finished with its task, it would write a one to Semaphore 0 and may then try to gain access to Semaphore 1. If Semaphore 1 was still occupied by the right side, the left side could undo its semaphore request and perform other tasks until it was able to write, then read a zero into Semaphore 1. If the right processor performs a similar task with Semaphore 0, this protocol would allow the two processors to swap 8K blocks of Dual-Port RAM with each other.

The blocks do not have to be any particular size and can even be variable, depending upon the complexity of the software using the semaphore flags. All eight semaphores could be used to divide the Dual-Port RAM or other shared resources into eight parts. Semaphores can even be assigned different meanings on different sides rather than being given a common meaning as was shown in the example above.

Semaphores are a useful form of arbitration in systems like disk interfaces where the CPU must be locked out of a section of memory during a transfer and the I/O device cannot tolerate any wait states. With the use of semaphores, once the two devices has determined which memory area was "off-limits" to the CPU, both the CPU and the I/O devices could access their assigned portions of memory continuously without any wait states.

Semaphores are also useful in applications where no memory "WAIT" state is available on one or both sides. Once a semaphore handshake has been performed, both processors can access their assigned RAM segments at full speed.

Another application is in the area of complex data structures. In this case, block arbitration is very important. For this application one processor may be responsible for building and updating a data structure. The other processor then reads and interprets that data structure. If the interpreting processor reads an incomplete data structure, a major error condition may exist. Therefore, some sort of arbitration must be used between the two different processors. The building processor arbitrates for the block, locks it and then is able to go in and update the data structure. When the update is completed, the data structure block is released. This allows the interpreting processor to come back and read the complete data structure, thereby guaranteeing a consistent data structure.

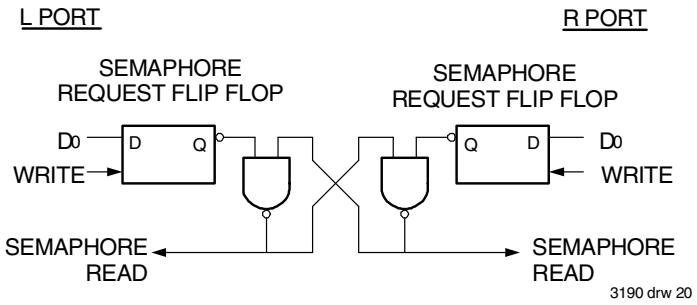

Figure 4. IDT7016 Semaphore Logic

Ordering Information

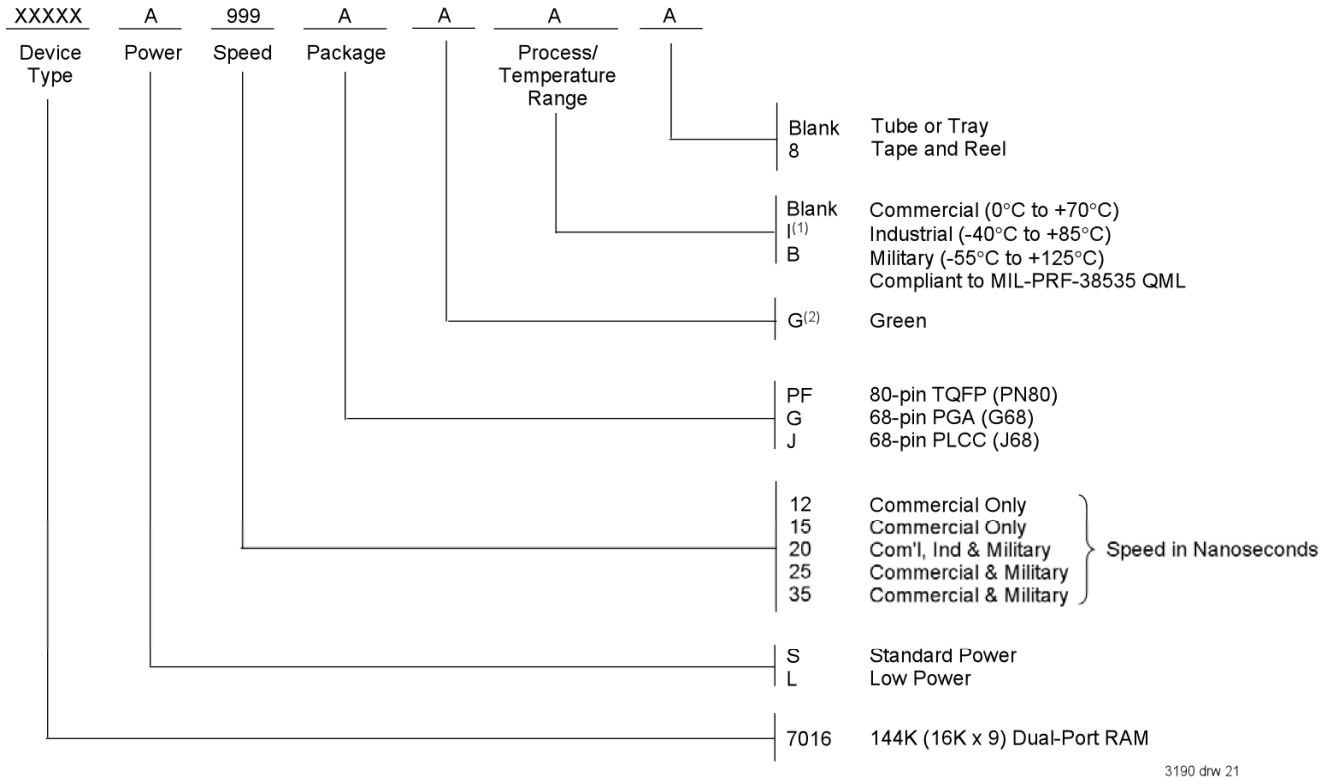

NOTES:
1. Contact your local sales office for industrial temp range for other speeds, packages and powers.
2. Green parts available. For specific speeds, packages and powers contact your local sales office.

Datasheet Document History

01/11/99:		Initiated datasheet document history
		Converted to new format
		Cosmetic and typographical corrections
	Pages 2 and 3	Added additional notes to pin configurations
06/03/99		Changed drawing format
	Page 1	Corrected DSC number
11/10/99:		Replaced IDT logo
05/19/00:	Page 4	Increased storage temperature parameter
		Clarified T_A parameter
	Page 6	DC Electrical parameters–changed wording from open to disabled
		Changed ±200mV to 0mV in notes
01/10/02:	Pages 2 & 3	Added date revision for pin configurations
	Pages 4, 6, 7, 9 & 12	Removed Industrial temp footnote from all tables
	Pages 6, 7, 9, 12 & 14	Added Industrial temp for 20ns speed to DC and AC Electrical Characteristics
	Page 20	Added Industrial temp offering to 20ns ordering information
	Pages 1 & 20	Replaced ™ logo with ® logo
04/04/06:	Page 1	Added green availability to features
	Page 20	Added indicator to ordering information
01/09/09:	Page 20	Removed "IDT" from orderable part number

Datasheet Document History (con't)

10/03/14:	Page 20	Added Tape and Reel to Ordering Information
	Page 2, 3, 4 & 20	The package codes PN80-1, G68-1 & J68-1 changed to PN80, G68 & J68 respectively to match standard package codes
10/10/14:	Page 20	Corrected two typos

CORPORATE HEADQUARTERS
6024 Silver Creek Valley Road
San Jose, CA 95138

for SALES:
800-345-7015 or 408-284-8200
fax: 408-284-2775
www.idt.com

for Tech Support:
408-284-2794
DualPortHelp@idt.com

The IDT logo is a registered trademark of Integrated Device Technology, Inc.