FEATURES

- Transient Protection: Meets the requirements of IEEE 472, "Surge Withstanding Capability Test"
- SPST, Normally Open
- UL, CSA, CE, TÜV Certified
- Optical Isolation
- OpenLine® and G5 Modules Provide Replaceable 5x20mm Glass Fuses
- Built-in Status LED
- Lifetime Warranty



70L-ODC 70G-ODC 70-ODC 70M-ODC

DIMENSIONS

For complete dimensional drawings, see pages L-4 or L-5.

FUSES

G5 Fuses are 5 Amp Littelfuse part number 217005 or equivalent. OpenLine® fuses are 3.15 Amp Littelfuse part number 2173.15.

Fuse kits available, see page L-104.

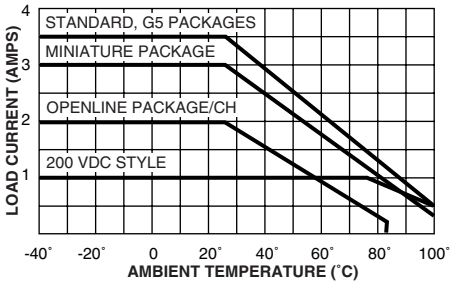

Figure 1

Maximum Current Versus Ambient Temperature

The chart indicates continuous current to limit the junction temperatures to 115°C. Information is based on steady state heat transfer in a 2 cubic foot sealed enclosure.

CIRCUITRY

Standard, Mini, G5

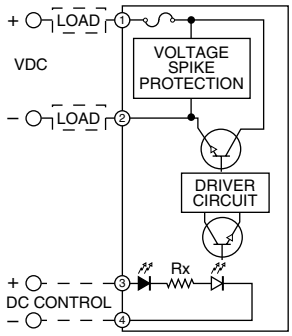

Fuse and status LED in G5 and OpenLine modules only.

OpenLine®

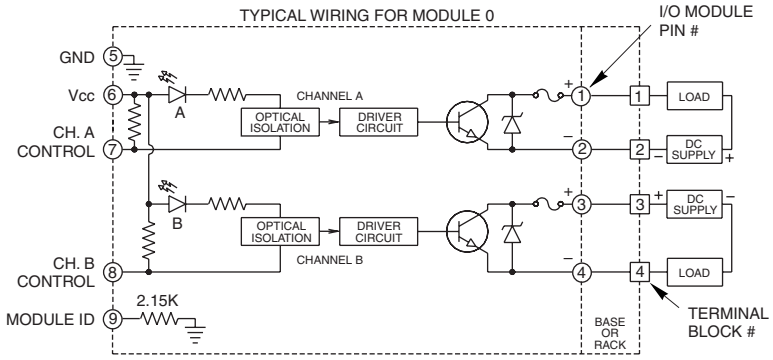

SPECIFICATIONS: By Package Style

Package Style		Std (70-)	Mini (70M-)	G5 (70G-)	OL (70L-)
Specifications	**Units**				
Load Current Range[1]	A	0.02-3.5	0.02-3.0	0.02-3.5	0.02-2.0/CH
Surge Current for 1 Sec.	A	5	5	5	5
Maximum Reverse Logic Voltage	Vdc	-5	-5	-5	-5
Isolation Voltage[2]	Vrms	4000	4000	4000	2500
Vibration[3]		MIL-STD-202	MIL-STD-202	MIL-STD-202	IEC68-2-6
Mechanical Shock[4]		MIL-STD-202	MIL-STD-202	MIL-STD-202	IEC68-2-27
Storage Temp. Range	°C	-40 to 125	-40 to 125	-40 to 125	-40 to 100
Operating Temp. Range	°C	-40 to 100	-40 to 100	-40 to 100	-40 to 85
Warranty		Lifetime	Lifetime	Lifetime	Lifetime

[1] See Figure 1 for derating.
[2] Field to logic and channel-to-channel if Grayhill racks are used.
[3] MIL-STD-202, Method 204, 20 G, 10-2000 Hz or IEC68-2-6, 0.15 mm/sec², 10-150 Hz.
[4] MIL-STD-202, Method 213, Condition F, 1500 G or IEC68-2-27, 11 mS, 15g.

Grayhill, Inc. • 561 Hillgrove Avenue • LaGrange, Illinois 60525-5997 • USA • Phone: 708-354-1040 • Fax: 708-354-2820 • www.grayhill.com

SPECIFICATIONS: By Part Number

Standard and Miniature Modules

Type/Function		Grayhill Part Number						
Miniature, Normally Open		70M-ODC5	70M-ODC5A	70M-ODC5B	70M-ODC15	70M-ODC15B	70M-ODC24	70M-ODC24B
Standard, Normally Open		70-ODC5	70-ODC5A	70-ODC5B	70-ODC15	70-ODC15B	70-ODC24	70-ODC24B
Specifications	**Units**							
Maximum Line Voltage	Vdc	60	200	60	60	60	60	60
Load Voltage Range	Vdc	3-60	4-200	3-60	3-60	3-60	3-60	3-60
Max. Off-State Leakage @ Max. Line	mA	1.5	0.01	0.01	1.5	0.01	1.5	0.01
Maximum Turn-On Time	µSec	20	75	75	20	75	20	75
Maximum Turn-Off Time	µSec	50	750	500	50	500	50	500
Typ. Power Dissipation	W/A	1	1.5	1	1	1	1	1
Clamping Voltage	Vdc	80	360	80	80	80	80	80
Nominal Logic Voltage (Vcc)	Vdc	5	5	5	15	15	24	24
Logic Voltage Range	Vdc	2.5-10	2.5-9	2.5-10	10-18	10-18	15-30	15-30
Maximum Logic Supply Current @ Nominal Vcc	mA	14	18	14	9	9	9	9
Nominal Input Resistance (Rx)	Ω	300	220	300	1800	1800	2700	2700
Minimum Drop Out Voltage	Vdc	1	1	1	1	1	1	1

G5 and OpenLine® Modules

Type/Function		Grayhill Part Number						
Fusible, Normally Open		70G-ODC5	70G-ODC5A	70G-ODC5B	70G-ODC15	70G-ODC15B	70G-ODC24	70G-ODC24B
Specifications	**Units**							
Maximum Line Voltage	Vdc	60	200	60	60	60	60	60
Load Voltage Range	Vdc	3-60	4-200	3-60	3-60	3-60	3-60	3-60
Max. Off-State Leakage @ Max. Line	mA	1.5	0.01	0.01	1.5	0.01	1.5	0.01
Maximum Turn-On Time	µSec	20	75	75	20	75	20	75
Maximum Turn-Off Time	µSec	50	750	500	50	500	50	500
Typ. Power Dissipation	W/A	1	1.5	1	1	1	1	1
Clamping Voltage	Vdc	80	360	80	80	80	80	80
Nominal Logic Voltage (Vcc)	Vdc	5	5	5	15	15	24	24
Logic Voltage Range	Vdc	4-6	4-6	4-6	10-20	10-20	18-32	18-32
Maximum Logic Supply Current @ Nominal Vcc	mA	13	13	13	9	9	9	9
Nominal Input Resistance (Rx)	Ω	150	150	150	1500	1500	2700	2700
Minimum Drop Out Voltage	Vdc	1	1	1	1	1	1	1

OpenLine® Modules

Type/Function		Grayhill Part Number		
Dual, Fusible, Normally Open		70L-ODC	70L-ODCA	70L-ODCB
Specifications	**Units**			
Maximum Line Voltage	Vdc	60	200	60
Load Voltage Range	Vdc	3-60	4-200	3-60
Max. Off-State Leakage @ Max. Line	mA	1.5	.01	.01
Maximum Turn-On Time	µSec	20	75	75
Maximum Turn-Off Time	µSec	50	750	500
Typ. Power Dissipation	WA	1	1.5	1
Clamping Voltage	Vdc	80	360	80
Nominal Logic Voltage (Vcc)	Vdc	5	5	5
Logic Voltage Range	Vdc	4.5-28	4.5-28	4.5-28
Maximum Logic Supply Current @ Nominal Vcc	mA	7/CH	7/CH	7/CH
Module ID Resistance to Logic Ground	Ω	2.15K	2.15K	2.15K
Minimum Drop Out Voltage	Vdc	1	1	1

Available from your local Grayhill Distributor.
For prices and discounts, contact a local Sales Office, an authorized local Distributor or Grayhill.