6.2A, 600V N-CHANNEL POWER MOSFET

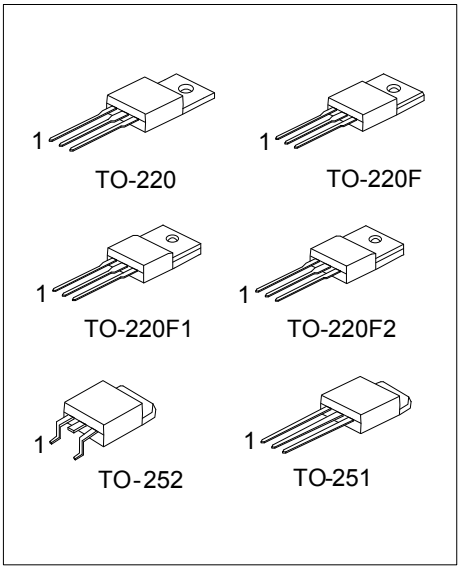

■ DESCRIPTION

The UTC **6N60** is a high voltage power MOSFET and is designed to have better characteristics, such as fast switching time, low gate charge, low on-state resistance and have a high rugged avalanche characteristics. This power MOSFET is usually used at high speed switching applications in switching power supplies and adaptors.

■ FEATURES

* $R_{DS(ON)}$ = 1.5Ω @V_{GS} = 10V
* Ultra low gate charge (typical 20 nC)
* Low reverse transfer Capacitance (C_{RSS} = typical 10pF)
* Fast switching capability
* Avalanche energy tested
* Improved dv/dt capability, high ruggedness

■ SYMBOL

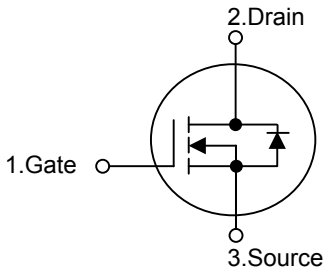

■ ORDERING INFORMATION

Ordering Number		Package	Pin Assignment			Packing
Lead Free	Halogen Free		1	2	3	
6N60L-TA3-T	6N60G-TA3-T	TO-220	G	D	S	Tube
6N60L-TF1-T	6N60G-TF1-T	TO-220F1	G	D	S	Tube
6N60L-TF2-T	6N60G-TF2-T	TO-220F2	G	D	S	Tube
6N60L-TF3-T	6N60G-TF3-T	TO-220F	G	D	S	Tube
6N60L-TM3-T	6N60G-TM3-T	TO-251	G	D	S	Tube
6N60L-TN3-R	6N60G-TN3-R	TO-252	G	D	S	Tape Reel
6N60L-TN3-T	6N60G-TN3-T	TO-252	G	D	S	Tube

Note: Pin Assignment: G: Gate D: Drain S: Source

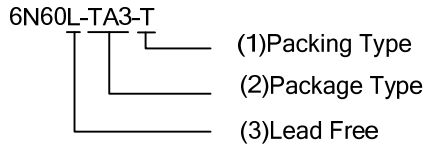

(1) T: Tube, R: Tape Reel

(2) TA3: TO-220, TF1: TO-220F1, TF3: TO-220F
TM3: TO-251, TN3: TO-252, TF2: TO-220F2

(3) G: Halogen Free, L: Lead Free

Copyright © 2011 Unisonic Technologies Co., Ltd

■ ABSOLUTE MAXIMUM RATINGS (T_C = 25°C, unless otherwise specified)

PARAMETER		SYMBOL	RATINGS	UNIT
Drain-Source Voltage		V_{DSS}	600	V
Gate-Source Voltage		V_{GSS}	±30	V
Avalanche Current (Note 2)		I_{AR}	6.2	A
Continuous Drain Current		I_D	6.2	A
Pulsed Drain Current (Note 2)		I_{DM}	24.8	A
Avalanche Energy	Single Pulsed (Note 3)	E_{AS}	440	mJ
	Repetitive (Note 2)	E_{AR}	13	mJ
Peak Diode Recovery dv/dt (Note 4)		dv/dt	4.5	ns
Power Dissipation	TO-220	P_D	125	W
	TO-220F/TO-220F1		40	
	TO-220F2		42	
	TO-251/TO-252		55	
Junction Temperature		T_J	+150	°C
Operating Temperature		T_{OPR}	-55 ~ +150	°C
Storage Temperature		T_{STG}	-55 ~ +150	°C

Notes: 1. Absolute maximum ratings are those values beyond which the device could be permanently damaged. Absolute maximum ratings are stress ratings only and functional device operation is not implied.
2. Repetitive Rating : Pulse width limited by T_J
3. L = 14mH, I_{AS} = 6A, V_{DD} = 90V, R_G = 25 Ω, Starting T_J = 25°C
4. I_{SD} ≤ 6.2A, di/dt ≤200A/μs, V_{DD} ≤ BV_{DSS}, Starting T_J = 25°C

■ THERMAL DATA

PARAMETER		SYMBOL	RATING	UNIT
Junction to Ambient	TO-220/ TO-220F2	θ_{JA}	62.5	°C/W
	TO-220F/TO-220F1		62.5	
	TO-251/TO-252		110	
Junction to Case	TO-220	θ_{JC}	1.0	°C/W
	TO-220F/TO-220F1		3.2	
	TO-220F2		2.97	
	TO-251/TO-252		2.27	

■ ELECTRICAL CHARACTERISTICS (T_J=25°C, unless otherwise specified)

PARAMETER		SYMBOL	TEST CONDITIONS	MIN	TYP	MAX	UNIT
OFF CHARACTERISTICS							
Drain-Source Breakdown Voltage		BV_{DSS}	V_{GS} = 0V, I_D = 250μA	600			V
Drain-Source Leakage Current		I_{DSS}	V_{DS} = 600V, V_{GS} = 0V			10	μA
Gate- Source Leakage Current	Forward	I_{GSS}	V_{GS} = 30V, V_{DS} = 0V			100	nA
	Reverse		V_{GS} = -30V, V_{DS} = 0V			-100	nA
Breakdown Voltage Temperature Coefficient		$\triangle BV_{DSS}/\triangle T_J$	I_D=250μA, Referenced to 25°C		0.53		V/°C
ON CHARACTERISTICS							
Gate Threshold Voltage		$V_{GS(TH)}$	V_{DS} = V_{GS}, I_D = 250μA	2.0		4.0	V
Static Drain-Source On-State Resistance		$R_{DS(ON)}$	V_{GS} = 10V, I_D = 3.1A		1.0	1.5	Ω
DYNAMIC CHARACTERISTICS							
Input Capacitance		C_{ISS}	V_{DS}=25V, V_{GS}=0V, f=1.0 MHz		770	1000	pF
Output Capacitance		C_{OSS}			95	120	pF
Reverse Transfer Capacitance		C_{RSS}			10	13	pF
SWITCHING CHARACTERISTICS							
Turn-On Delay Time		$t_{D(ON)}$	V_{DD}=300V, I_D =6.2A, R_G =25Ω (Note 1, 2)		20	50	ns
Turn-On Rise Time		t_R			70	150	ns
Turn-Off Delay Time		$t_{D(OFF)}$			40	90	ns
Turn-Off Fall Time		t_F			45	100	ns
Total Gate Charge		Q_G	V_{DS}=480V, I_D=6.2A, V_{GS}=10 V (Note 1, 2)		20	25	nC
Gate-Source Charge		Q_{GS}			4.9		nC
Gate-Drain Charge		Q_{GD}			9.4		nC
DRAIN-SOURCE DIODE CHARACTERISTICS AND MAXIMUM RATINGS							
Drain-Source Diode Forward Voltage		V_{SD}	V_{GS} = 0 V, I_S = 6.2 A			1.4	V
Maximum Continuous Drain-Source Diode Forward Current		I_S				6.2	A
Maximum Pulsed Drain-Source Diode Forward Current		I_{SM}				24.8	A
Reverse Recovery Time		t_{rr}	V_{GS} = 0 V, I_S = 6.2 A, dI_F/dt = 100 A/μs (Note 1)		290		ns
Reverse Recovery Charge		Q_{RR}			2.35		μC

Notes: 1. Pulse Test: Pulse width ≤ 300μs, Duty cycle ≤ 2%
2. Essentially independent of operating temperature

■ TEST CIRCUITS AND WAVEFORMS

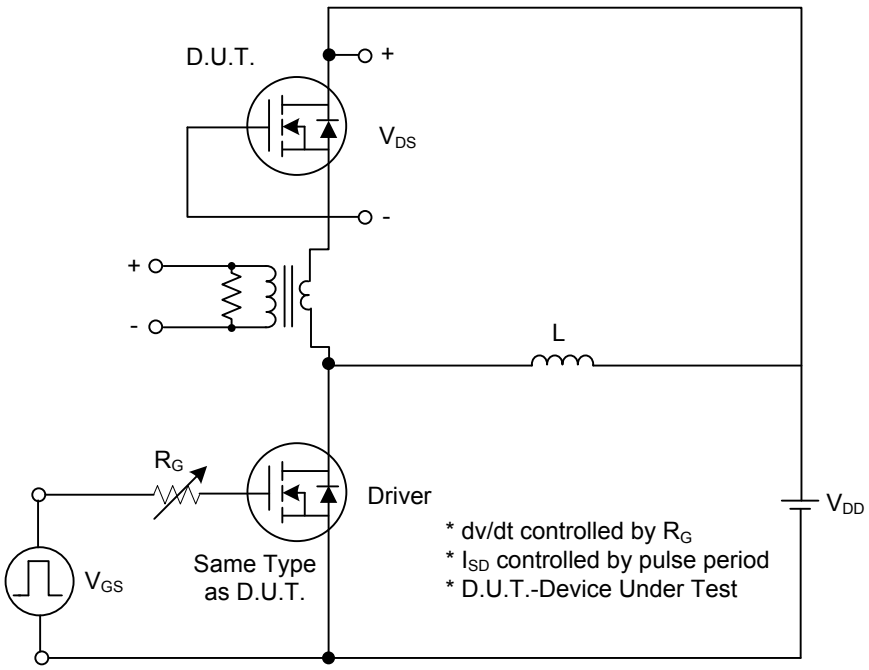

Peak Diode Recovery dv/dt Test Circuit

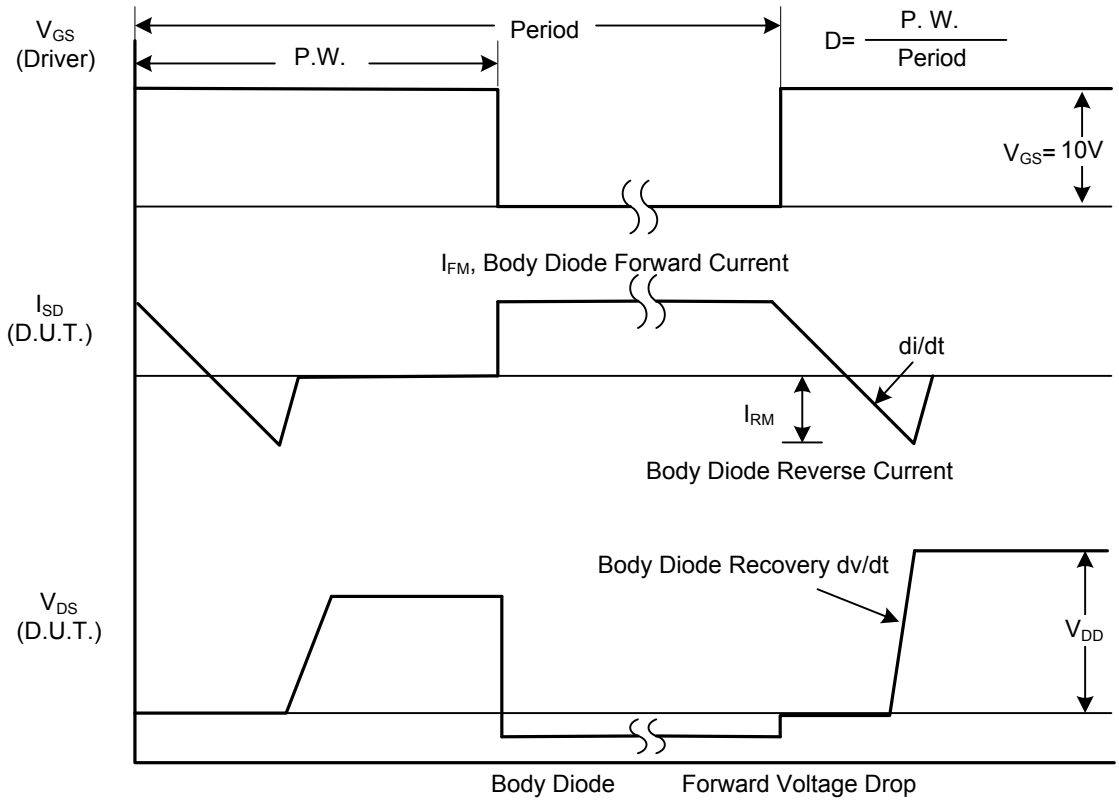

Peak Diode Recovery dv/dt Waveforms

■ TEST CIRCUITS AND WAVEFORMS (Cont.)

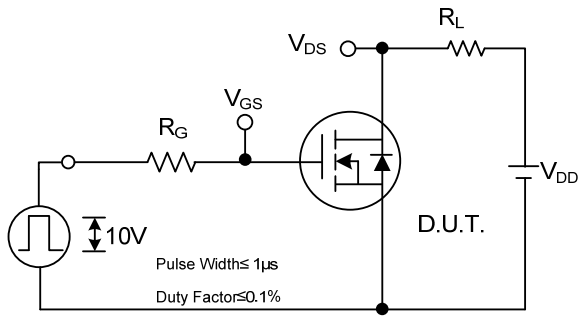

Switching Test Circuit

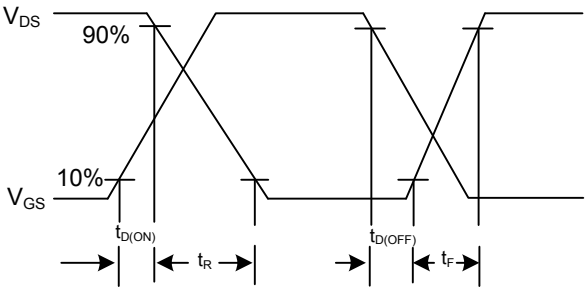

Switching Waveforms

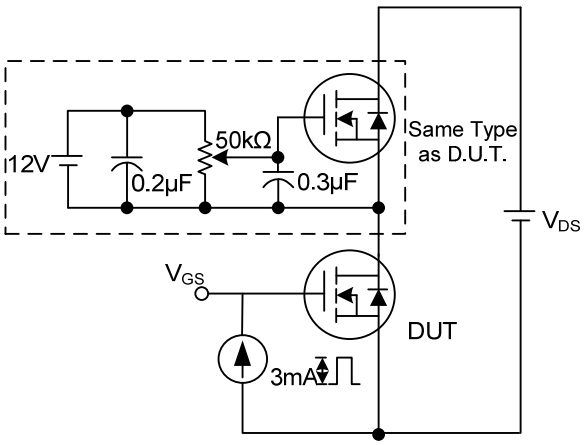

Gate Charge Test Circuit

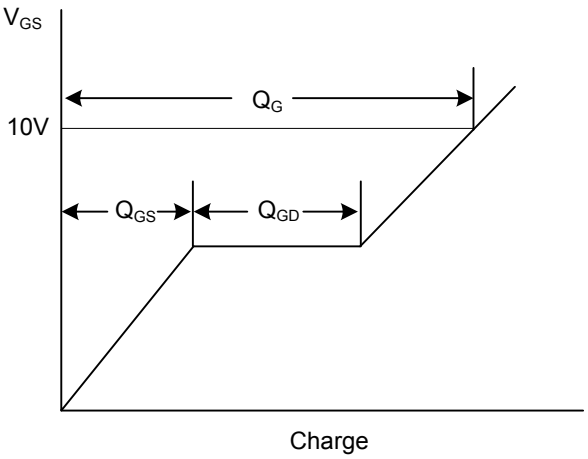

Gate Charge Waveform

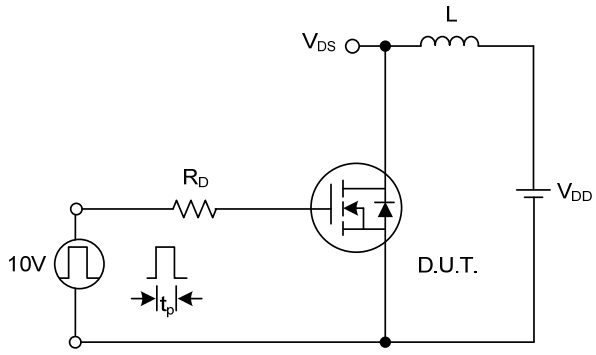

Unclamped Inductive Switching Test Circuit

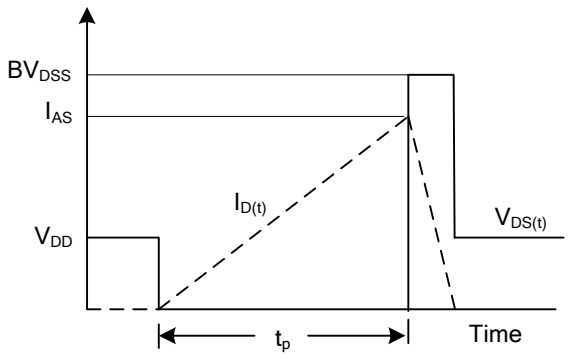

Unclamped Inductive Switching Waveforms

■ TYPICAL CHARACTERISTICS

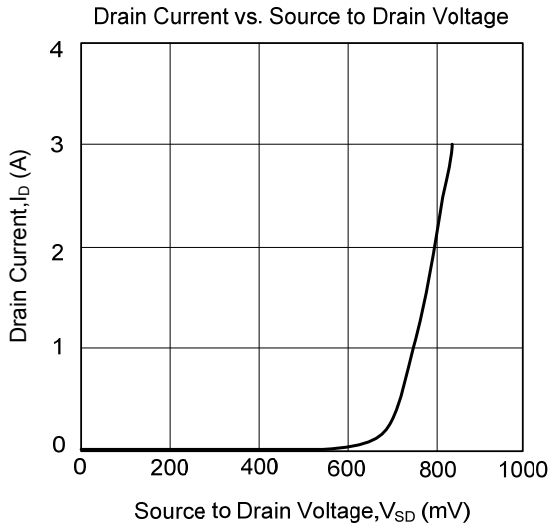

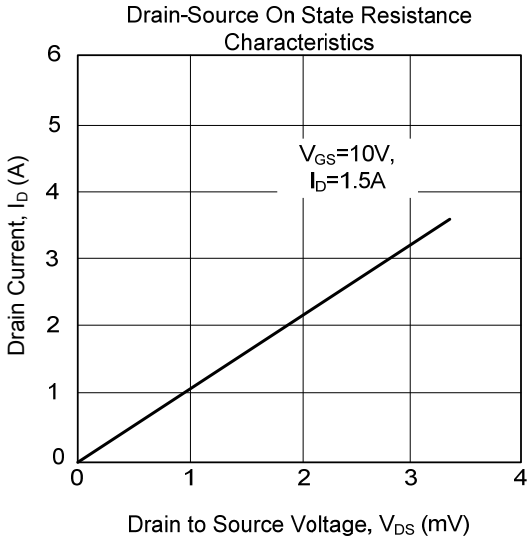

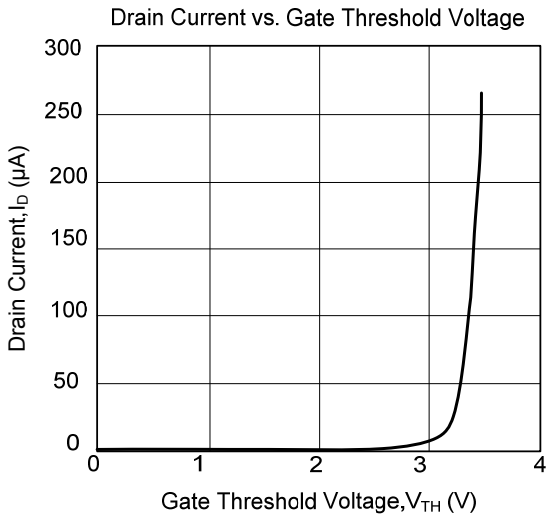

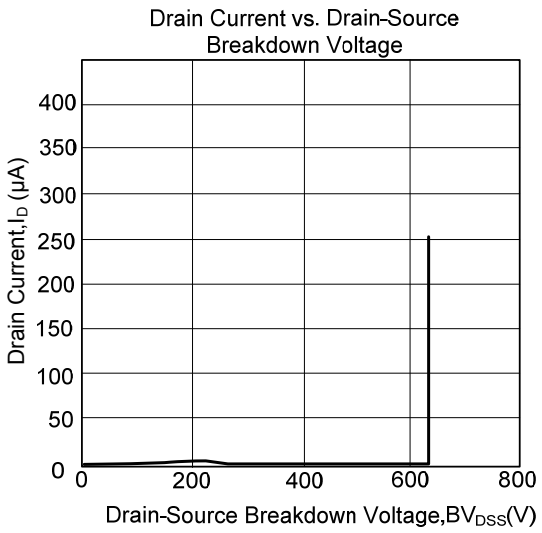

UTC assumes no responsibility for equipment failures that result from using products at values that exceed, even momentarily, rated values (such as maximum ratings, operating condition ranges, or other parameters) listed in products specifications of any and all UTC products described or contained herein. UTC products are not designed for use in life support appliances, devices or systems where malfunction of these products can be reasonably expected to result in personal injury. Reproduction in whole or in part is prohibited without the prior written consent of the copyright owner. The information presented in this document does not form part of any quotation or contract, is believed to be accurate and reliable and may be changed without notice.