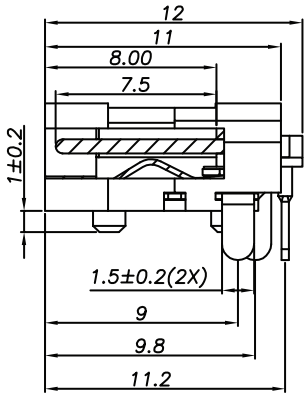

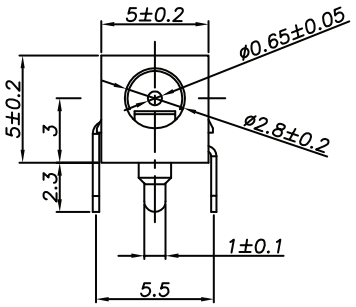

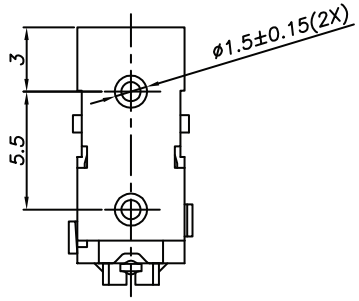

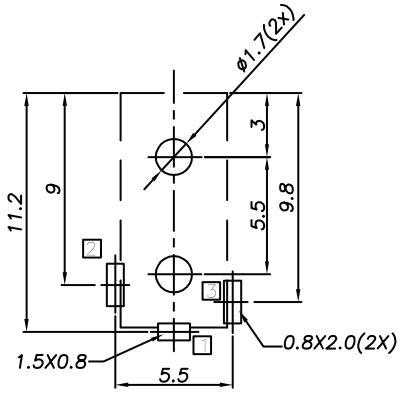

PCB LAYOUT - COMPONENT VIEW
TOLERANCE ± 0.05

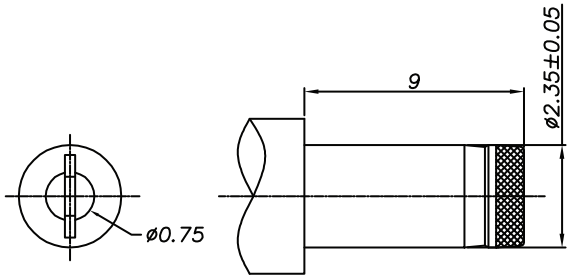

DC MATE PLUG

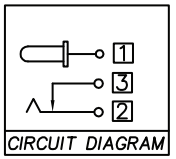

☐ : TERMINAL NO.

TECHNICAL CHARACTERISTICS

MATERIAL
INSULATOR: PA 66
FLAMABILITY RATING: UL94-V0
COLOR: BLACK
CONTACT MATERIAL: COPPER ALLOY
CONTACT TYPE: STAMPED
PLATING:
- CENTER PIN: GOLD
- SHUNT TERMINAL: TIN
- TIP SPRING: TIN
QUALITY CLASS: 5000 MATING CYLCES

ENVIRONMENTAL
OPERATING TEMPERATURE: -40°C UP TO +85°C
COMPLIANCE: LEAD FREE AND ROHS

ELECTRICAL
CURRENT RATING: 2A
WORKING VOLTAGE: 12 VDC
INSULATION RESISTANCE: >100 MΩ
DIELECTRIC WITHSTANDING VOLTAGE: 500 VAC/MIN
CONTACT RESISTANCE: 50 mΩ max

SOLDERING
JEDEC LEAD FREE WAVE SOLDERING PROCESS

PACKAGING
BAG

RoHS Compliant

REV	DATE	FILE	BY
G			
F			
E			
D			
C			
B			
A	29-OCT-14	PDF	AS

PROJECTION:

APPROVAL: JTs

GENERAL TOLERANCE
X = +/_ 0.50
.X = +/_ 0.30
.XX = +/_ 0.20

UNIT: MM
SCALE:
SHEET: 1/3
DRAW: AS

WÜRTH ELEKTRONIK

DESCRIPTION: DC POWER JACK - RIGHT ANGLED -THT - 0.65Ø - WR-DC

WERI PART NO: 694 101 308 002

SIZE
A4

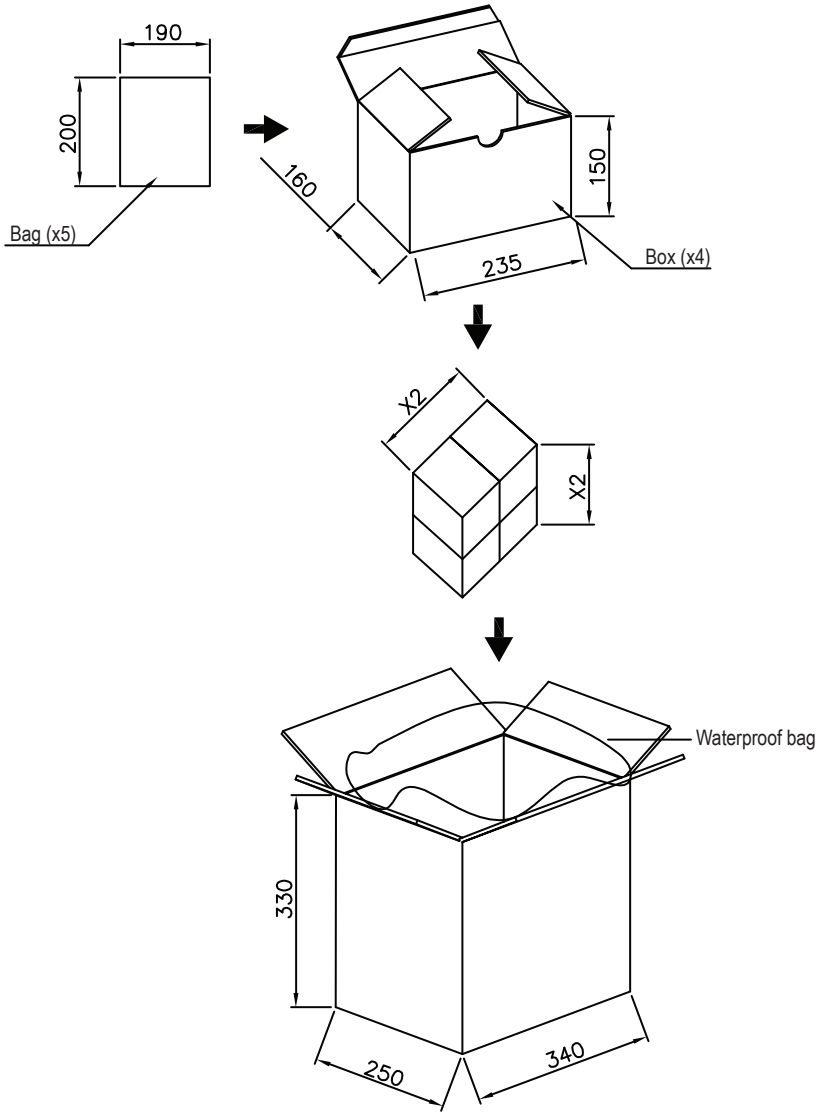

1000 pcs/bag
5 bags/box *5000 pcs/box*
4 boxes/carton *20000 pcs/carton*

RoHS Compliant

REV	DATE	FILE	BY
G			
F			
E			
D			
C			
B			
A	29-OCT-14	PDF	AS

PROJECTION:

GENERAL TOLERANCE
.X = +/_ 0.2
.XX = +/_ 0.15

APPROVAL: JTs

UNIT: MM
SCALE:
SHEET: 2/3
DRAW: AS

WÜRTH ELEKTRONIK

DESCRIPTION: DC POWER JACK - RIGHT ANGLED -THT - 0.65Ø - WR-DC

WERI PART NO: 694 101 308 002

SIZE
A4

Cautions and Warnings:

This electronic component is designed and developed with the intention for use
in general electronics equipments.
Before incorporating the components into any equipments in the field such as aerospace, aviation,
nuclear control, submarine, transportation, (automotive control, train control, ship control),
transportation signal, disaster prevention, medical, public information network etc. where higher safety
and reliability are especially required or if there is possibility of direct damage or injury to human body,
Wurth Elektronik must be asked for a written approval.
In addition, even electronic component in general electronic equipments, when used in electrical circuits
that require high safety, reliability functions or performance, the sufficient reliability evaluation-check
for the safety must be performed before by the user before usage.

RoHS Compliant							
G				PROJECTION:	GENERAL TOLERANCE	WÜRTH ELEKTRONIK	
F					.X = +/- 0.2		
E					.XX = +/- 0.15		
D							
C				APPROVAL: JC	UNIT: MM	DESCRIPTION: DISCLAIMER	SIZE
B					SCALE:		A4
A	10-SEP-14	PDF	QL		SHEET: 3/3	WERI PART NO: DISCLAIMER	
REV	DATE	FILE	BY		DRAW: QL		