ILC7082

150mA SOT-23 Ultra Low Noise
CMOS RF-LDO™ Regulator

POWER POWERED BY IMPALA ON THE GO

General Description

The ILC7082 is a 150mA low dropout (LDO) voltage regulator designed to provide a high performance solution to low power systems. The device offers a typical combination of low dropout and low quiescent current expected of CMOS parts, while uniquely providing the low noise and high ripple rejection characteristics usually only associated with bipolar LDO regulators.

The device has been optimized to meet the needs of modern wireless communications design; Low noise, low dropout, small size, high peak current, high noise immunity.

The ILC7082 is designed to make use of low cost ceramic capacitors while outperforming other devices that require tantalum capacitors.

Features

- Ultra low 1mV dropout per 1mA load
- 1% output voltage accuracy
- Only 30mV$_{RMS}$ noise
- Uses low ESR ceramic output capacitor to minimize noise and output ripple
- Only 100µA ground current at 100mA load
- Ripple rejection up to 85dB at 1kHz, 60dB at 1MHz
- Excellent line and load transient response
- Over current / over temperature protection
- Guaranteed to 150mA output current
- Industry standard five lead SOT-23 package
- Fixed 2.8V, 3.0V, 3.3V, 3.6V, 4.7V, 5.0V and adjustable output voltage options
- Metal mask option available for custom voltages between 2.5V and 10V

Applications

- Cellular phones
- Wireless communicators
- PDAs / palmtops / organizers
- Battery powered portable electronics

TYPICAL CIRCUIT

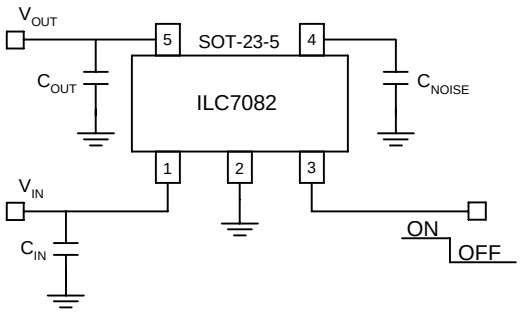

Ordering Information (TA = -40°C to +85°C)	
ILC7082AIM5-xx	150mA, fixed voltage
ILC7082AIM5-ADJ	150mA, adjustable voltage
ILC7082AIK-xx 150mA	Fixed voltage (SOIC-8)

PIN DESCRIPTION ILC7082-XX (fixed voltage version)

Pin Number	Pin Name	Pin Description
1	V_{IN}	Connect Directly to Supply
2	GND	Ground pin
3	ON/OFF	By Applying less than 0.4V to this pin the device will be turned off
4	C_{NOISE}	Optional Noise bypass capacitor may be connected between this pin and the GND (pin 2). Do not connect C_{NOISE} directly to the main power ground plane.
5	V_{OUT}	Output voltage. Connect C_{OUT} between this pin and the GND (pin 2).

PIN DESCRIPTION ILC7082-AIK-xx (SOIC fixed voltage version)

Pin Number	Pin Name	Pin Description
1	GND	Connect Directly to Supply
2	ON/OFF	Ground pin. Local ground for C_{NOISE} and C_{OUT}.
3	V_{IN}	Connect directly to supply
4	N/C	No connection
5	N/C	No connection
6	V_{OUT}	Output Voltage. Connect C_{OUT} between this pin and GND (pin 2)
7	N/C	No Connection
8	N/C	No Connection

PIN DESCRIPTION ILC7082-ADJ (adjutable voltage version)

Pin Number	Pin Name	Pin Description
1	V_{IN}	Connect Directly to Supply
2	GND	Ground pin. Local ground for C_{NOISE} and C_{OUT}.
3	ON/OFF	By Applying less than 0.4V to this pin the device will be turned off
4	V_{ADJ}	Voltage feedback pin to set the adjustable output voltage. Do not connect a capacitor to this pin.
5	V_{OUT}	Output voltage. Connect C_{OUT} between this pin and the GND (pin 2).

PIN PACKAGE CONFIGURATIONS

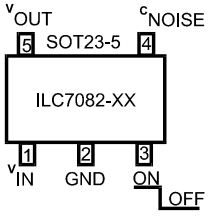

Fixed Voltage option

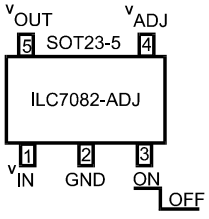

Adjustable Voltage option

ABSOLUTE MAXIMUM RATINGS (NOTE 1)

Parameter	Symbol	Ratings	Units
Input voltage On/Off Input voltage	V_{IN} $V_{ON/OFF}$	-0.3 to +13.5 -0.3 to VIN	V
Output Current	I_{OUT}	Short circuit protected	MA
Output voltage	V_{OUT}	-0.3 to VIN+0.3	V
Package Power Dissipation (SOT-23-5)	P_D	250 (Internally Limited)	MW
Maximum Junction Temp Range	$T_{J(max)}$	-40~+150	^oC
Storage Temperature	T_{STG}	-40~+125	^oC
Operating Ambient Temperature	T_A	-40 to +85	^oC
Package Thermal Resistance	θ_{JA}	333	$^oC/W$

ELECTRICAL CHARACTERISTICS ILC7082AIM5

Unless otherwise specified. all limits are at T_A = 25°C, $V_{IN} = V_{OUT(NOM)}$+1V, I_{OUT} = 1mA, C_{OUT} = 1µF, $V_{ON/OFF}$ = 2V
Boldface limits apply over the operating temperature range. **(Note 2)**

Parameter	Symbol	Conditions	Min	Typ	Max	Units
Input voltage Range	V_{IN}		**2**		**13**	V
Output Voltage	V_{OUT}	I_{OUT} = 1mA	-1	V_{OUT} (NOM)	+1	%V_{OUT} (NOM)
		1mA ≤ I_{OUT} ≤ 100mA 1mA ≤ I_{OUT} ≤ 100mA	-1.5 **-2.5**	V_{OUT} (NOM)	+1.5 **+2.5**	
		1mA ≤ I_{OUT} ≤ 150mA 1mA ≤ I_{OUT} ≤ 150mA	-2.5 **-3.5**	V_{OUT} (NOM)	+2.5 **+3.5**	
Feedback Voltage (ADJ Version)	V_{ADJ}		1.215 **1.202**		1.265 **1.278**	V
Line regulation	$\triangle V_{OUT}$ (V_{OUT}* $\triangle V_{OUT}$)	V_{OUT}(NOM)+1V ≤ V_{IN} ≤ 12V		0.007	0.014 **0.032**	%/V
Dropout Voltage **(Note 3)**	V_{IN}- V_{OUT}	I_{OUT} = 0mA **(Note 4)**		0.1	1 **2**	mV
		I_{OUT} = 10mA		10	25 **35**	
		I_{OUT} = 50mA		50	75 **100**	
		I_{OUT} = 100mA		100	150 **200**	
		I_{OUT} = 150mA		150	225 **300**	

ELECTRICAL CHARACTERISTICS ILC7082AIM5 (continued)

Unless otherwise specified. all limits are at T_A = 25°C, V_{IN} = $V_{OUT(NOM)}$+1V, I_{OUT} = 1mA, C_{OUT} = 1µF, $V_{ON/OFF}$ = 2V
Boldface limits apply over the operating temperature range. **(Note 2)**

Parameter	Symbol	Conditions	Min	Typ	Max	Units
Ground Pin Current	I_{GND}	I_{OUT} = 0mA		95	200 **220**	µA
		I_{OUT} = 1mA		100	220 **240**	
		1mA ≤ I_{OUT} ≤ 100mA		100	220 **240**	
		1mA ≤ I_{OUT} ≤ 150mA		100	240 **260**	
		1mA ≤ I_{OUT} ≤ 150mA		115	260 **280**	
Shutdown (OFF) Current	$I_{ON/OFF}$	$V_{ON/OFF}$ = 0V		0.1	**2**	µA
ON/OFF Input Voltage	$V_{ON/OFF}$	High = Regulator On Low = Regulator Off	**1.5**		**13** **0.06**	
ON/OFF Pin Input Current **(Note 5)**	$I_{IN\ (on/off)}$	$V_{ON/OFF}$ = 0.6V, REGULATOR OFF $V_{ON/OFF}$ = 2V, REFULATOR ON		0.3 1		µA
Peak Output Current **(Note 4)**	$I_{OUT(peak)}$	V_{OUT} ≥ 0.95V OUT (NOM), t_{pw}=2ms	400	500		MA
Output Noise Voltage (RMS)	e_N	BW = 300Hz to 50kHz, C_{IN} = 1µF C_{NOISE} = 0.01µF, C_{OUT} = 2.2 µF, I_{OUT} = 10mA		30		μV_{RMS}
Ripple Rejection	$\triangle V_{OUT}/\triangle V_{IN}$	C_{OUT} = 4.7µF, I_{OUT} = 100mA, freq = 1kHz		85		dB
		C_{OUT} = 4.7µF, I_{OUT} = 100mA, freq = 10kHz		70		
		C_{OUT} = 4.7µF, I_{OUT} = 100mA, freq = 1mHz		60		
Dynamic Line Regulation	$\triangle V_{OUT}$ (line)	V_{IN}: V_{OUT} (NOM) + 1V to V_{OUT} (NOM) + 2V, tr/tf = 2ms; I_{OUT} = 150mA		14		mV
Dynamic Load Regulation	$\triangle V_{OUT(load)}$	I_{OUT}: 1mA to 150mA; tr < 5µS		40		mV
Short Circuit Current	I_{SC}	V_{OUT} = 0V		600		mA

Note 1: Absolute maximum ratings indicate limits which when exceeded may result in damage to the component. Electrical specifications do not apply when operating the device outside of its rated operating conditions.
Note 2: Specified Min/Max limits are production tested or guaranteed through correlation based on statistical control methods. Measurements are taken at constant junction temperature as close to ambient as possible using low duty pulse testing.
Note 3: Dropout voltage is defined as the input to output differential voltage at which the output voltage drops 2% below the nominal value measured with an IV differential.
Note 4: Guaranteed by design
Note5 : The device's shutdown pin includes a 2MΩ internal pulldown resistor connected to ground.

ELECTRICAL CHARACTERISTICS ILC7082AIM5 (continued)

OPERATION

The ILC7082 LDO design is based on an advanced circuit configuration for which patent protection has been applied. Typically it is very difficult to drive a capacitive output with an amplifier. The output capacitance produces a pole in the feedback path, which upsets the carefully tailored dominant pole of the internal amplifier. Traditionally the pole of the output capacitor has been “eliminated” by reducing the output impedance of the regulator such that the pole of the output capacitor is moved well beyond the gain bandwidth product of the regulator. In practice, this is difficult to do and still maintain high frequency operation. Typically the output impedance of the regulator is not simply resistive, such that the reactive output impedance interacts with the reactive impedance of the load resistance and capacitance. In addition, it is necessary to place the dominant pole of the circuit at a sufficiently low frequency such that the gain of the regulator has fallen below unity before any of the complex interactions between the output and the load occur. The ILC7082 does not try to eliminate the output pole, but incorporates it into the stability scheme. The load and output capacitor forms a pole, which rolls off the gain of the regulator below unity. In order to do this the output impedance of the regulator must be high, looking like a current source. The output stage of the regulator becomes a transconductance amplifier, which converts a voltage to a current with a substantial output impedance. The circuit which drives the transconductance amplifier is the error amplifier, which compares the regulator output to the band gap reference and produces an error voltage as the input to the transconductance amplifier. The error amplifier has a dominant pole at low frequency and a “zero” which cancels out the effects of the pole. The zero allows the regulator to have gain out to the frequency where the output pole continues to reduce the gain to unity. The configuration of the poles and zero are shown in figure 1. Instead of powering the critical circuits from the unregulated input voltage, the CMOS RF LDO powers the internal circuits such as the bandgap, the error amplifier and most of the transconductance amplifier from the boot strapped regulated output voltage of the regulator. This technique offers extremely high ripple rejection and excellent line transient response.

A block diagram of the regulator circuit used in the ILC7082 is shown in figure 2 (following page), which shows the input-to-output isolation and the cascaded sequence of amplifiers that implement the pole-zero scheme outlined above.

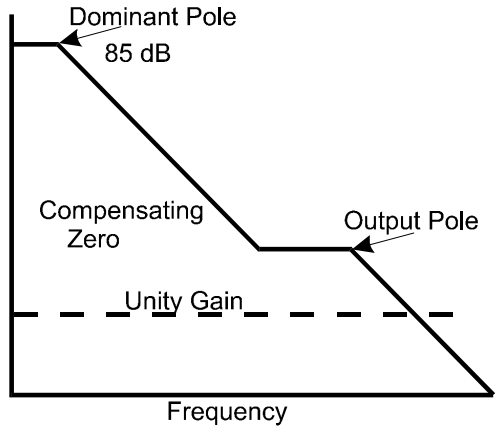

Figure 1: ILC7082 RF LDO frequency response

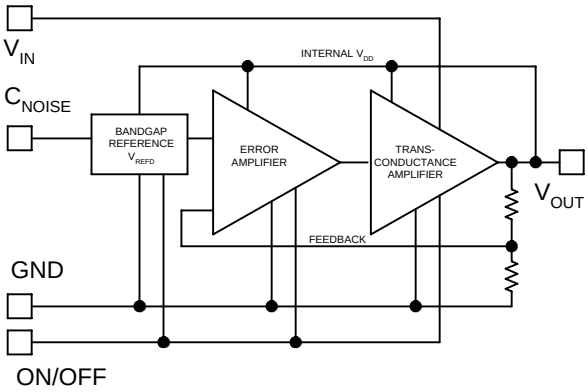

Figure 2: ILC7082 RF LDO regulator block diagram

The ILC7082 is designed in a CMOS process with some minor additions, which allow the circuit to be used at input voltages up to 13V. The resulting circuit exceeds the frequency response of traditional bipolar circuits. The ILC7082 is very tolerant of output load conditions with the inclusion of both short circuit and thermal overload protection. The device has a very low dropout voltage, typically a linear response of 1mV per milliamp of load current, and none of the quasi-saturation characteristics of a bipolar output devices. All the good features of the frequency response and regulation are valid right to the point where the regulator goes out of regulation in a 4 millivolt transition region. Because there is no base drive, the regulator is capable of providing high current surges while remaining in regulation. This is shown in the high peak current of 500mA which allows for the ILC7082 to be used in systems that require short burst mode operation.

ELECTRICAL CHARACTERISTICS ILC7082AIM5 (continued)

Shutdown (ON/OFF) Operation

The ILC7082 output can be turned off by applying 0.4V or less to the device's ON/OFF pin (pin 3). In shutdown mode, the ILC7082 draws less than 1mA quiescent current. The output of the ILC7081 is enabled by applying 1.5V to 13V at the ON/OFF pin. In applications were the ILC7082 output will always remain enabled, the ON/OFF pin may be connected to V_{IN} (pin 1). The ILC7082's shutdown circuitry includes hysteresis, as such the device will operate properly even if a slow moving signal is applied to the ON/OFF pin. The device's shutdown pin includes a 2MW internal pull down resistor connected to ground.

Short Circuit Protection

The ILC7082 output can withstand momentary short circuit to ground. Moreover, the regulator can deliver very high output peak current due to its 1A instantaneous short circuit current capability.

Thermal Protection

The ILC7082 also includes a thermal protection circuit which shuts down the regulator when die temperature exceeds 170°C due to overheating. In thermal shutdown, once the die temperature cools to below 160°C, the regulator is enabled. If the die temperature is excessive due to high package power dissipation, the regulator's thermal circuit will continue to pulse the regulator on and off. This is called thermal cycling.

Excessively high die temperature may occur due to high differential voltage across the regulator or high load current or high ambient temperature or a combination of all three. Thermal protection protects the regulator from such fault conditions and is a necessary requirement in today's designs. In normal operation, the die temperature should be limited to under 150°C.

Adjustable Output Voltage

Figure 5 shows how an adjustable output voltage can be easily achieved using ILC7082-Adj. The output voltage, V_{OUT} is given by the following equation:

$$V_{OUT} = 1.24V \times (R1/R2 + 1)$$

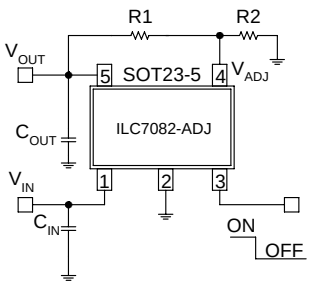

Fig. 3: Application circuit for adjustable output voltage

For best results, a resistor value of 470kW or less may be used for R2. The output voltage can be programmed from 2.5V to 12V.

Note that an external capacitor should not be connected to the adjustable feedback pin (pin 4). Connecting an external capacitor to pin 4 may cause regulator instability and lead to oscillations.

Maximum Output Current

The maximum output current available from the ILC7082 is limited by the maximum package power dissipation as well as the device's internal current limit. For a given ambient temperature, T_A, the maximum package power dissipation is given by:

$$P_{D(MAX)} = (T_{J(MAX)} - T_A) / \theta_{JA}$$

where $T_{J(MAX)}$ = 150°C is the maximum junction temperature and θJA = 333°C/W is the package thermal resistance. For example at T_A = 85°C ambient temperature, the maximum package power dissipation is;

$$P_{D(MAX)} = 195mW.$$

The maximum output current can be calculated from the following equation:

$$I_{OUT(MAX)} < P_{D(MAX)} / (V_{IN} - V_{OUT})$$

For example at V_{IN} = 6V, V_{OUT} = 5V and T_A = 85°C, the maximum output current is $I_{OUT(MAX)}$ < 195mA. At higher output current, the die temperature will rise and cause the thermal protection circuit to be enabled.

APPLICATION HINTS

Figure 4 shows the typical application circuit for the ILC7082.

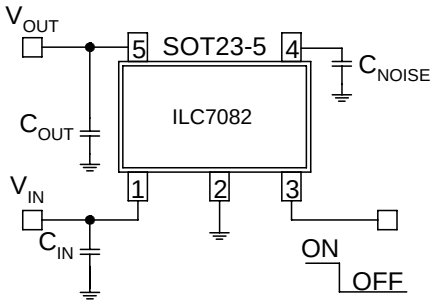

Figure 4: Basic application circuit for fixed output voltage versions

Input Capacitor

An input capacitor C_{IN} of value 1µF or larger should be connected from V_{IN} to the main ground plane. This will help to filter supply noise from entering the LDO. The input capacitor should be connected as close to the LDO regulator input pin as is practical. Using a high-value input capacitor will offer superior line transient response as well as better power supply ripple rejection. A ceramic or tantalum capacitor may be used at the input of the LDO regulator.

Note that there is a parasitic diode from the LDO regulator output to the input. If the input voltage swings below the regulator's output voltage by a couple of hundred milivolts then the regulator may be damaged. This condition must be avoided. In many applications a large value input capacitor, C_{IN}, will hold V_{IN} higher than V_{OUT} and decay slower than V_{OUT} when the LDO is powered off.

Output Capacitor Selection

Impala strongly recommends the use of low ESR (equivalent series resistance) ceramic capacitors for C_{OUT} and C_{NOISE} The ILC7082 is stable with low ESR capacitor (as low as zero Ω). The value of the output capacitor should be 1µF or higher. Either ceramic chip or a tantalum capacitor may be used at the output.

Use of ceramic chip capacitors offer significant advantages over tantalum capacitors. A ceramic capacitor is typically cheaper than a tantalum capacitor, it usually has a smaller footprint, lower height, and lighter weight than a tantalum capacitor. Furthermore, unlike tantalum capacitors which are polarized and can be damaged if connected incorrectly, ceramic capacitors are non-polarized. Low value ceramic chip capacitors with X5R or X7R dielectric are available in the 100pF to 4.7mF range. Beware of using ceramic capacitors with Y5V dielectric since their ESR increases significantly at cold temperatures. Figure 12 shows a list of recommended ceramic capacitors for use at the output of ILC7082.

Note: If a tantalum output capacitor is used then for stable operation Impala recommends a low ESR tantalum capacitor with maximum rated ESR at or below 0.4W. Low ESR tantalum capacitors, such as the TPS series from AVX Corporation (www.avxcorp.com) or the T495 series from Kemet (www.kemet.com) may be used.

In applications where a high output surge current can be expected, use a high value but low ESR output capacitor for superior load transient response. The ILC7082 is stable with no load.

Noise Bypass Capacitor

In low noise applications, the self noise of the ILC7082 can be decreased further by connecting a capacitor from the noise bypass pin (pin 4) to ground (pin 2). The noise bypass pin is a high impedance node as such care should be taken in printed circuit board layout to avoid noise pick-up from external sources. Moreover, the noise bypass capacitor should have low leakage.

Noise bypass capacitors with a value as low as 470pF may be used. However, for optimum performance, use a 0.01mF or larger, ceramic chip capacitor. Note that the turn on and turn off response of the ILC7082 is inversely proportional to the value of the noise bypass capacitor. For fast turn on and turn off, use a small value noise bypass capacitor. In applications were exceptionally low output noise is not required, consider omitting the noise bypass capacitor altogether.

The Effects of ESR (Equivalent Series Resistance)

The ESR of a capacitor is a measure of the resistance due to the leads and the internal connections of the component. Typically measured in mΩ (milli-ohms) it can increase to ohms in some cases.

Wherever there is a combination of resistance and current, voltages will be present. The control functions of LDOs use two voltages in order to maintain the output precisely; V_{OUT} and V_{REF}.

With reference to the block diagram in figure 4, V_{OUT} is fed back to the error amplifier and is used as the supply voltage for the internal components of the ILC7082. So any change in V_{OUT} will cause the error amplifier to try to compensate to maintain V_{OUT} at the set level and noise on V_{OUT} will be reflected into the supply of each internal components of the ILC7082. So any change in V_{OUT} will cause the error amplifier to try to compensate to maintain V_{OUT} at the set level and noise on V_{OUT} will be reflected into the supply of each internal circuit. The reference voltage, V_{REF}, is influenced by the C_{NOISE} pin. Noise into this pin will add to the reference voltage and be fed through the circuit. These factors will not cause a problem if some simple steps are taken. Figure 5 shows where these added ESR resistances are present in the typical LDO circuit.

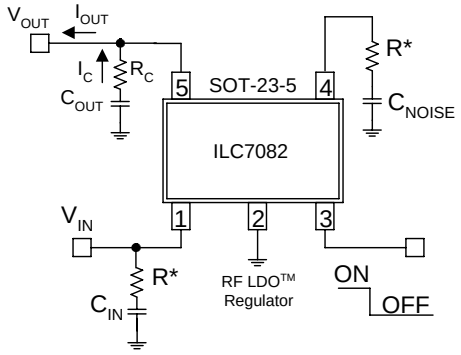

Figure 5: ESR present in C_{OUT} and C_{NOISE}

With this in mind low ESR components will offer better performance where the LDO may be subjected to large load transients current. ESR is less of a problem with C_{IN} as the voltage fluctuations at the input will be filtered by the LDO.

However, being aware of these current flows, there is also another potential source of induced voltage noise from the resistance inherent in the PCB trace. Figure 6 shows where the additive resistance of the PCB can manifest itself. Again these resistances may be very small, but a summation of several currents can develop detectable voltage ripple and will be amplified by the LDO. Particularly the accumulation of current flows in the ground plane can develop significant voltages unless care is taken. With a degree of care, the ILC7082 will yield outstanding performance.

Printed Circuit Board Layout Guidelines

As was mentioned in the previous section, to take full advantage of any high performance LDO regulator requires paying careful attention to grounding and printed circuit board (PCB) layout.

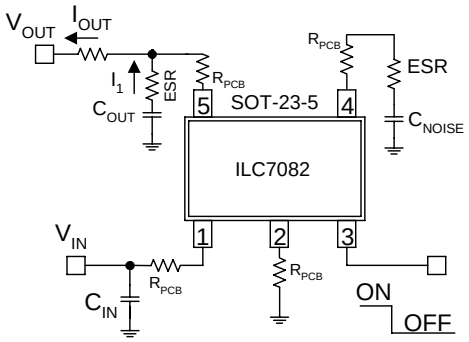

Figure 6: Inherent PCB resistance

Figure 7 shows the effects of poor grounding and PCB layout magnified by the ESR and PCB resistances and the accumulation of current flows.

Note thatparticularly during high output load current, the LDO regulator's ground pin and the ground return for C_{OUT} and C_{NOISE} are not at the same potential as the system ground. This is due to high frequency impedance caused by PCB's trace inductance and DC resistance. The current loop between C_{OUT}, C_{NOISE} and the LDO regulator's ground pin will degrade performance of the LDO.

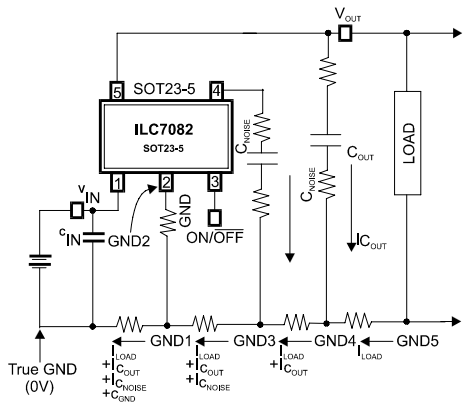

Figure 7: Effects of poor circuit layout

Figure 8 shows an optimum schematic. In this schematic, high output surge current has little effect on the ground current and noise bypass current return of the LDO regulator. Note that the key difference here is that C_{OUT} and C_{NOISE} are directly connected to the LDO regulator's ground pin. The LDO is then separately connected to the main ground plane and returned to a single point system ground.

The layout of the LDO and its external components are also based on some simple rules to minimize EMI and output voltage ripple.

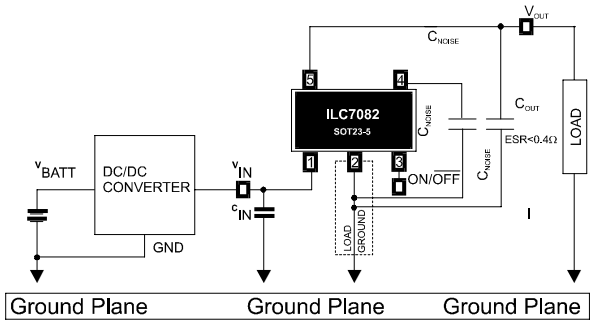

Figure 8: Recommended application circuit schematic.

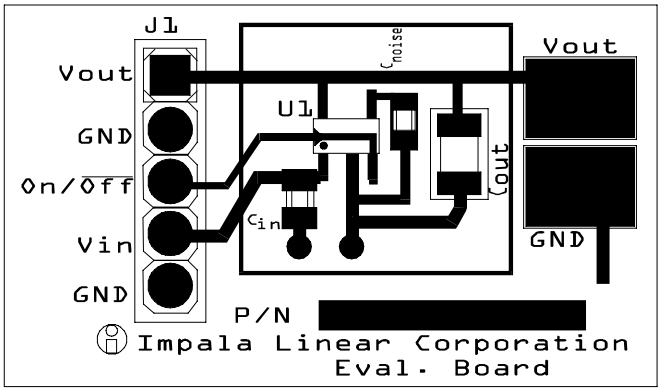

Figure 9: Recommended application circuit layout (not drawn to scale)
Note, ground plane is bottom layer of PCB and connects to top layer ground connections through vias.

Evaluation Board Parts List For Printed Circuit Board Shown Above

Pin Number	Pin Name	Manufacturer	Description
U1	ILC7082AIM5-30	Impala Linear	150mA RF LDO™ regulator
J1	69190-405	Berg	Connector, four position header
Cin	GRM40 Y5V 105Z16	muRata	Ceramic capacitor, 1µF,16V,SMT (size 0805)
Cnoise	ECU-V1H103KBV	Panasonic	Ceramic capacitor, 0.01µF,16V,SMT (size 0603)
Cout	GRM42-6X5R475K10	muRata	Ceramic capacitor, 4.7µF16V,SMT (size 1206)

GROUNDING RECOMMENDATIONS

1. Connect C_{IN} between V_{IN} of the ILC7082 and the "GROUND PLANE".
2. Keep the ground side of C_{OUT} and C_{NOISE} connected to the "LOCAL GROUND" and not directly to the "GROUND PLANE".
3. On multilayer boards use component side copper for grounding around the ILC7082 and connect back to a "GROUND PLANE" using vias.
4. If using a DC-DC converter in your design, use a star grounding system with separate traces for the power ground and the control signals. The star should radiate from where the power supply enters the PCB.

LAYOUT CONSIDERATIONS

1. Place all RF LDO related components; ILC7082, input capacitor C_{IN}, noise bypass capacitor C_{NOISE} and output capacitor C_{OUT} as close together as possible.
2. Keep the output capacitor C_{OUT} as close to the ILC7082 as possible with very short traces to the V_{OUT} and GND pins.
3. The traces for the related components; ILC7082, input capacitor C_{IN}, noise bypass capacitor C_{NOISE} and output capacitor C_{OUT} can be run with minimum trace widths close to the LDO.
4. Maintain a separate "LOCAL GROUND" remote from the "GROUND PLANE" to ensure a quiet ground near the LDO. Figure 9 shows how this circuit can be translated into a PCB layout.

Recommended Ceramic Output Capacitors

C_{OUT}	Capacitor Size	I_{OUT}	Dielectric	Part Number	Capacitor Vendor
1µF	0805	0-150 mA	X5R	C2012X5R1A105KT	TDK
"	0805	"	X7R	GRM40X7R105K010	MuRata
"	0805	"	X7R	LMK212BJ105KG	Taiyo-Yuden
"	1206	"	X7R	GRM42-6X7R105K016	MuRata
"	1206	"	X7R	EMK316BJ105KL	Taiyo-Yuden
"	1206	"	X5R	TMK316BJ105KL	Taiyo-Yuden
2.2µF	0805	0-150 mA	X5R	GRM40X5R225K 6.3	MuRata
"	0805	"	X5R	C2012X5R0J225KT	TDK
	1206	"	X5R	EMK316BJ225ML	Taiyo-Yuden
4.7µF	1206	0-150 mA	X5R	GRM42-6X7R475K010	MuRata
"	1206	"	X7R	LMK316BJ475ML	Taiyo-Yuden

TYPICAL PERFORMANCE CHARACTERISTICS

Unless otherwise specified T_A T=25°C, V_{IN} =$V_{OUT(NOM)}$, + 1V, ON/$\overline{OFF}$ pin tied to V_{IN}

Output Voltage vs Temperature

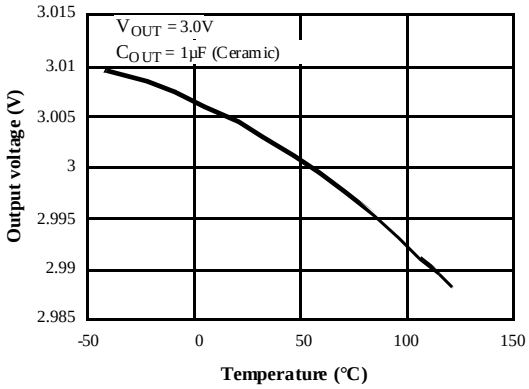

Dropout Characteristics

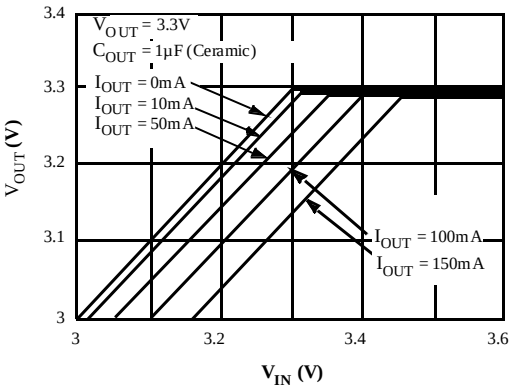

Dropout Voltage vs Temperature

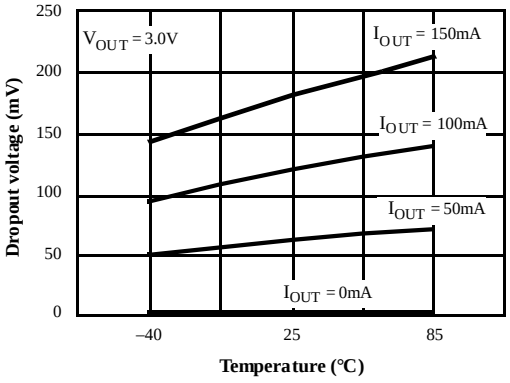

Dropout Voltage vs I_{OUT}

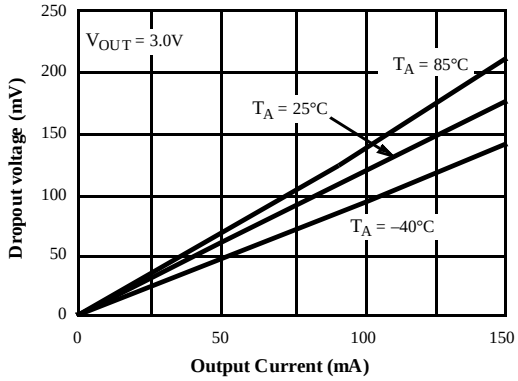

Ground Current vs Input Voltage

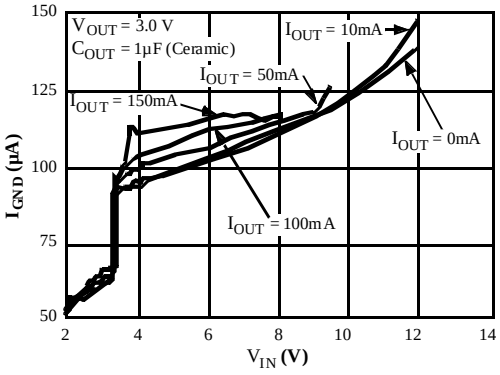

Line Transient Response

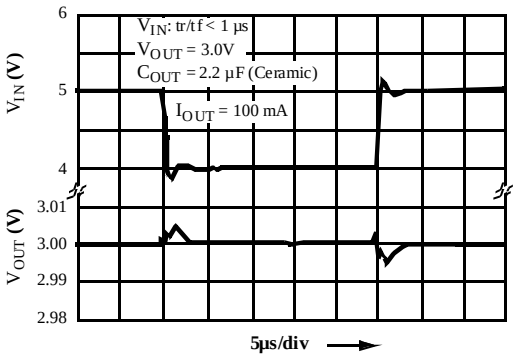

TYPICAL PERFORMANCE CHARACTERISTICS

Unless otherwise specified T_A T=25°C, V_{IN} =$V_{OUT(NOM)}$, + 1V, ON/$\overline{OFF}$ pin tied to V_{IN}

Load Transient Response

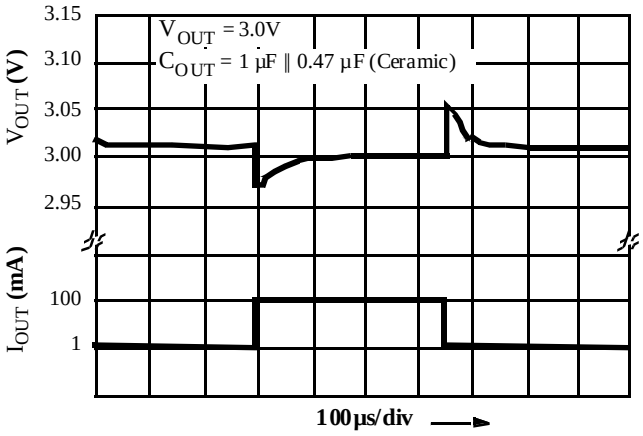

Short Circuit Current

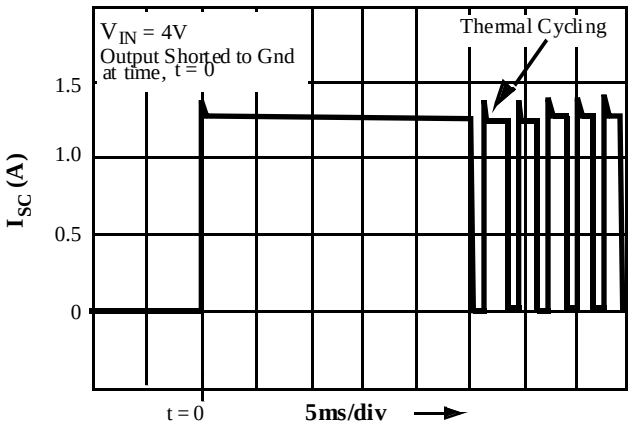

On/Off Transient Response

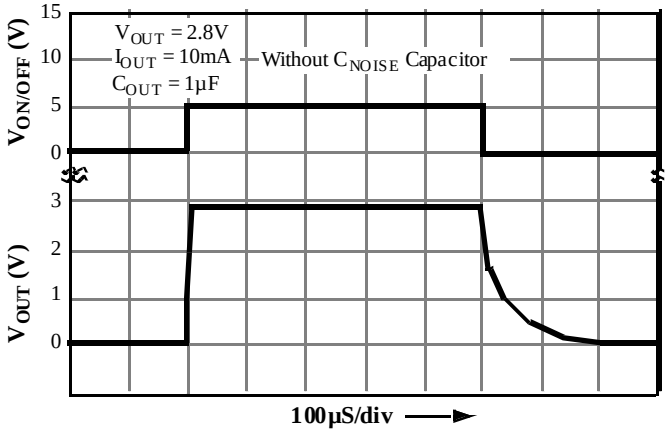

On/Off Transient Response

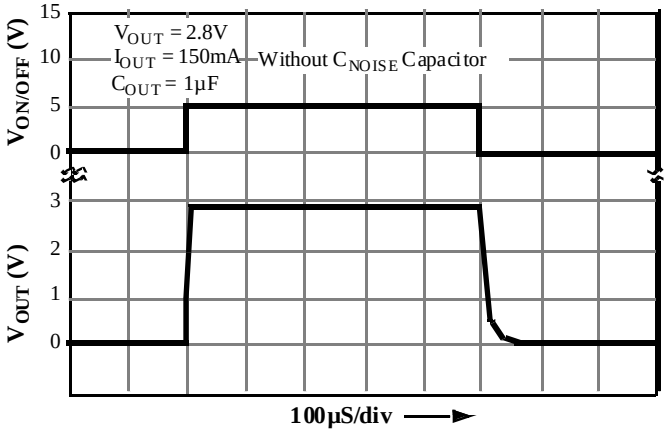

On/Off Transient Response

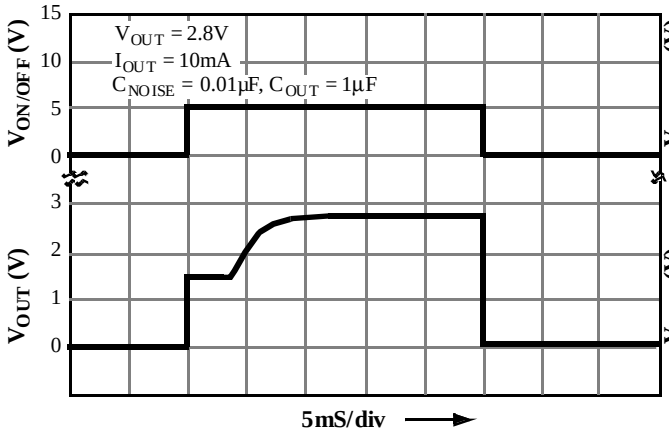

On/Off Transient Response

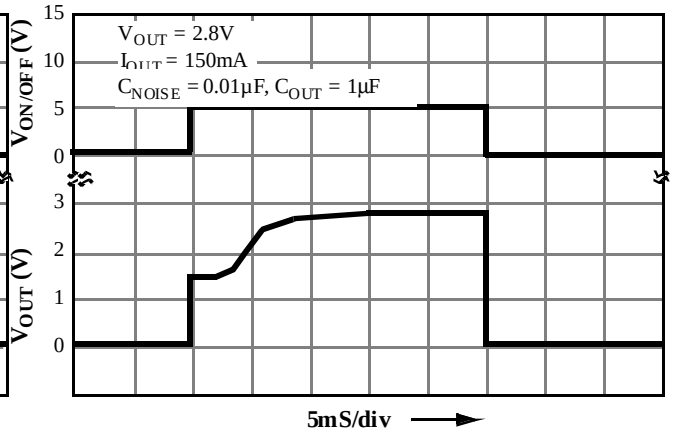

TYPICAL PERFORMANCE CHARACTERISTICS

Unless otherwise specified T_A T=25°C, V_{IN} =$V_{OUT(NOM)}$, + 1V, ON/$\overline{OFF}$ pin tied to V_{IN}

Spectral Noise Density

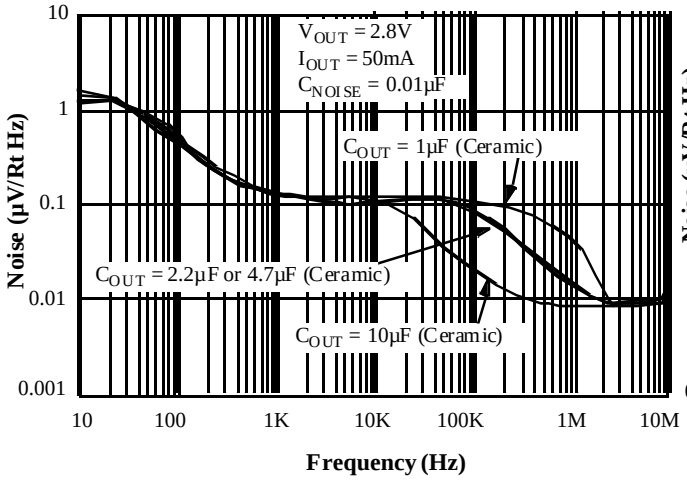

Spectral Noise Density

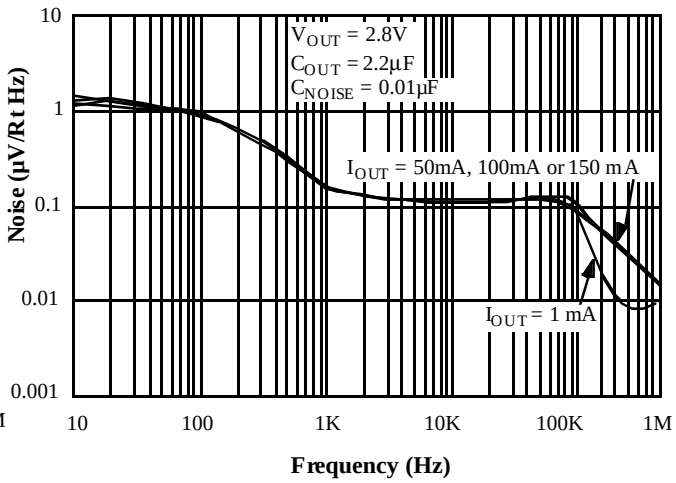

Output Noise Voltage vs. C_{NOISE}

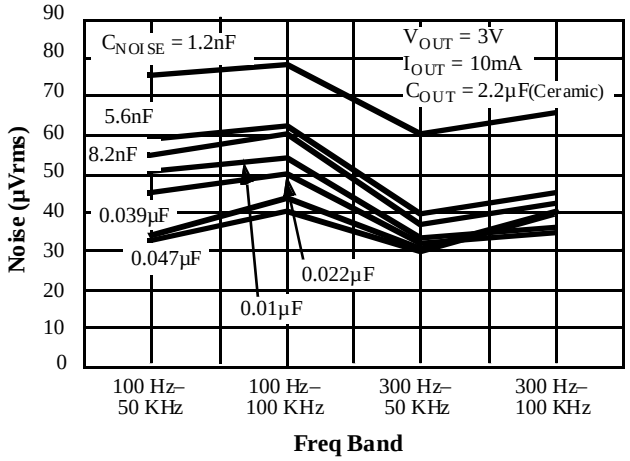

Output Noise Voltage vs. C_{NOISE}

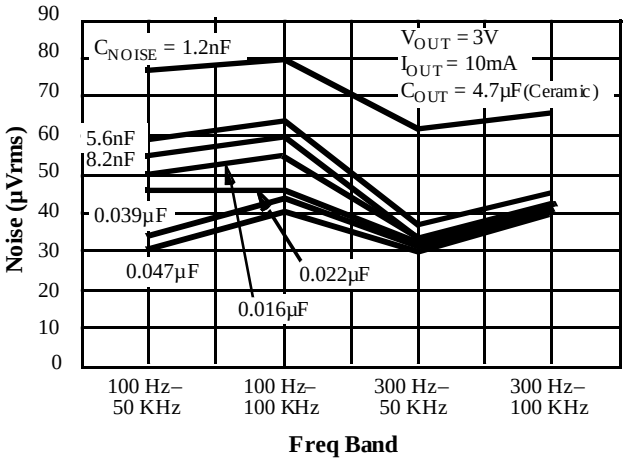

Ripple Rejection vs. Frequency

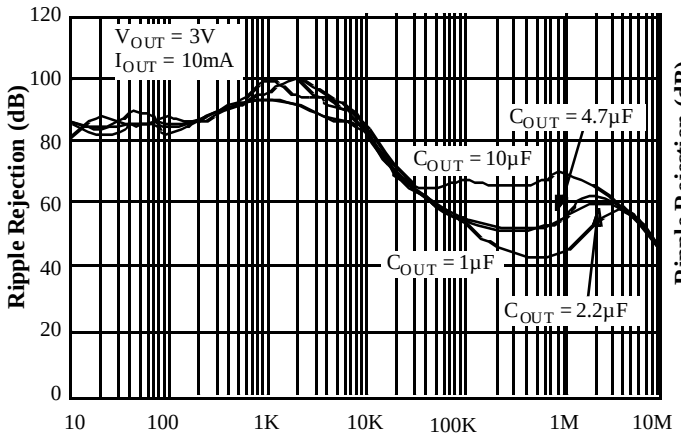

Ripple Rejection vs. Frequency

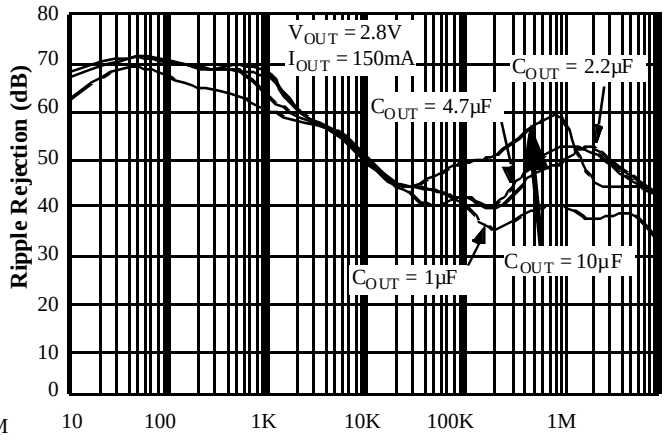

SOT-23 PACKAGE MARKINGS
ILC7082AIM5-XX

Output Voltage (V)	Grade	Order Information	*Package Markings	Supplied As
2.8	A	ILC7082AIM5-28	EAXX	3k units on tape and reel
2.85	A	ILC7082AIM5-285	EJXX	3k units on tape and reel
3.0	A	ILC7082AIM5-30	EBXX	3k units on tape and reel
3.1	A	ILC7082AIM5-31	EHXX	3k units on tape and reel
3.3	A	ILC7082AIM5-33	ECXX	3k units on tape and reel
3.6	A	ILC7082AIM5-36	EDXX	3k units on tape and reel
4.7	A	ILC7082AIM5-47	EGXX	3k units on tape and reel
5.0	A	ILC7082AIM5-50	EEXX	3k units on tape and reel
Adj	A	ILC7082AIM5-Adj	EFXX	3k units on tape and reel
*Note: First two characters identify the product and the last two identify the date code				

Output Voltage (V)	Grade	Order Information	*Package Markings	Supplied As
2.85	A	ILC7082AIM5-285	7082 AIK285 XX	2500 units on tape and reel
3.3	A	ILC7082AIM5-33	7082 AIK33 XX	2500 units on tape and reel

Package Outline Dimensions Dimensions shown in mm and (inches). 8-Lead plastic surface mount (SOIC)

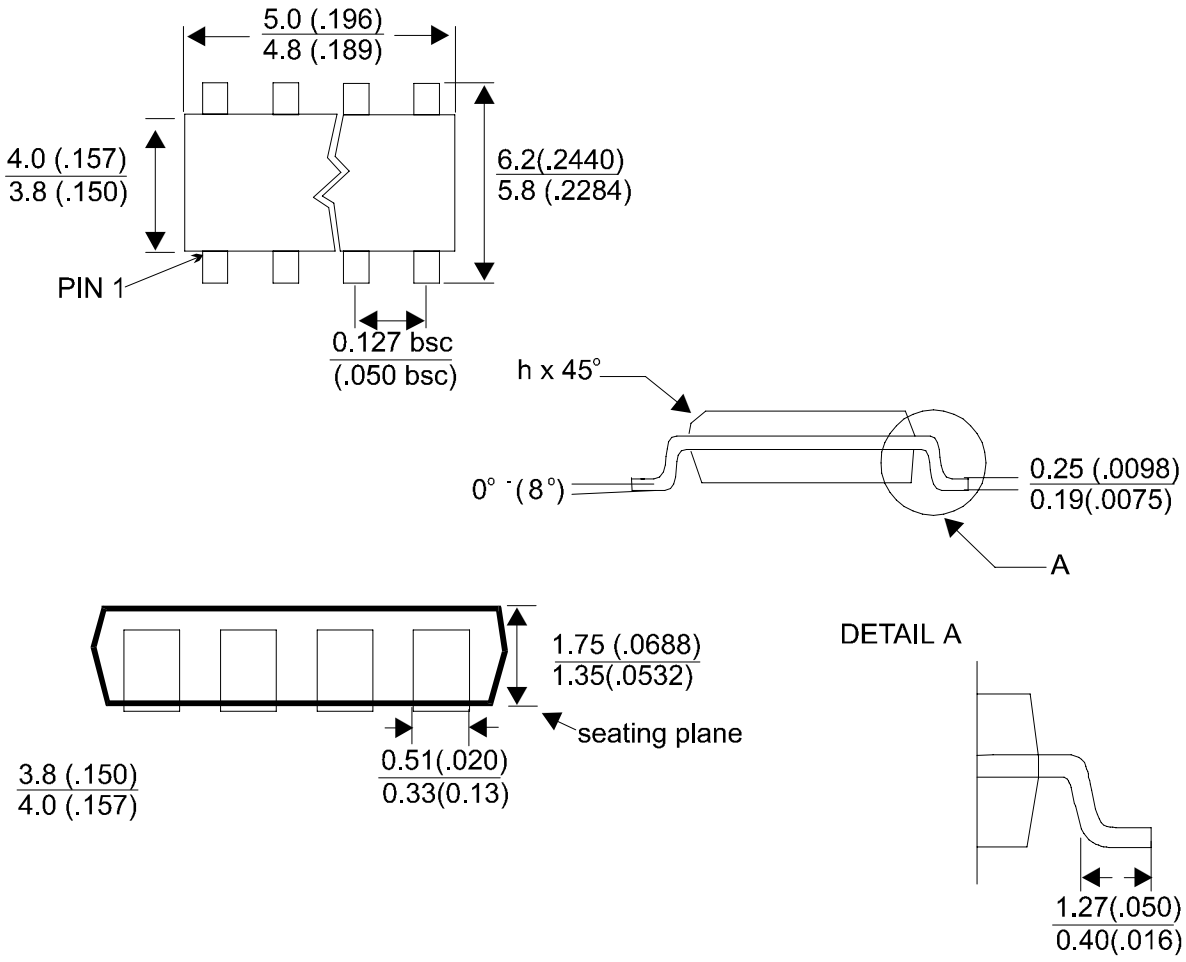

Package Outline Dimensions Dimensions shown in inches and (mm). 5-Lead plastic surface mount (SOT-23-5)

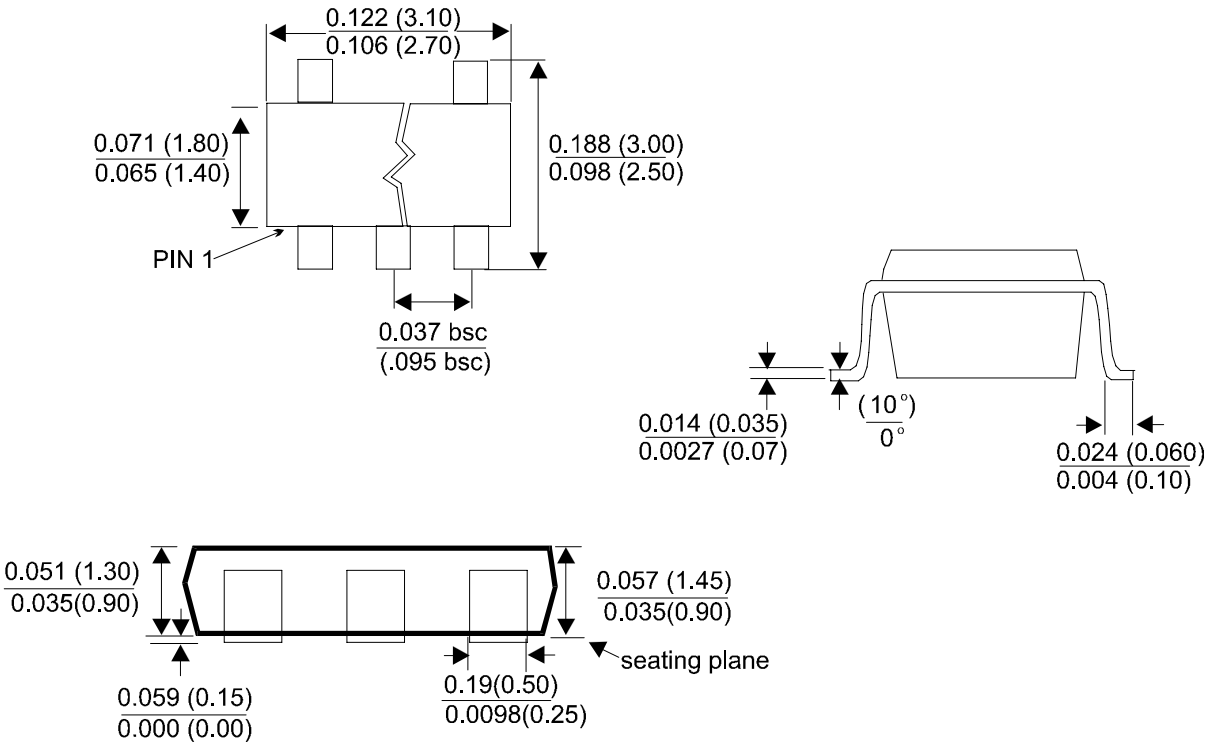

Devices sold by Impala Linear Corporation are covered by the warranty and patent indemnification provisions appearing in its Terms of Sale only. Impala Linear Corporation makes no warranty, express, statutory, implied, or by description regarding the information set forth herein or regarding the freedom of the described devices from patent infringement. Impala Linear Corporation makes no warranty of merchantability or fitness for any purpose. Impala Linear Corporation reserves the right to discontinue production and change specifications and prices at any time and without notice.

This product is intended for use in normal commercial applications. Applications requiring an extended temperature range, unusual environmental requirements, or high reliability applications, such as military and aerospace, are specifically not recommended without additional processing by Impala Linear Corporation.

Impala Linear Corporation assumes no responsibility for the use of any circuitry other than circuitry embodied in an Impala Linear Corporation product. No other circuits, patents, licenses are implied.

Life Support Policy

Impala Linear Corporation's products are not authorized for use as critical components in life support devices or systems.

1. Life support devices or systems are devices or systems which, (a) are intended for surgical implant into the body, or (b) support or sustain life, and whose failure to perform, when properly used in accordance with instructions for use provided in the labelling, can be reasonably expected to result in a significant injury to the user.

2. A critical component is any component of a life support device or system whose failure to perform can be reasonbly expected to cause the failure of the life support device or system, or to affect its safety or effectiveness.