PRODUCT NUMBER
69167-XYYXXXHLF

- LEAD FREE OPTION NOTE 1, 2, 7
- POLARIZATION NOTE 10
- NO. OF POS. SEE TABLE
- PIN PLATING
- BASE P/N

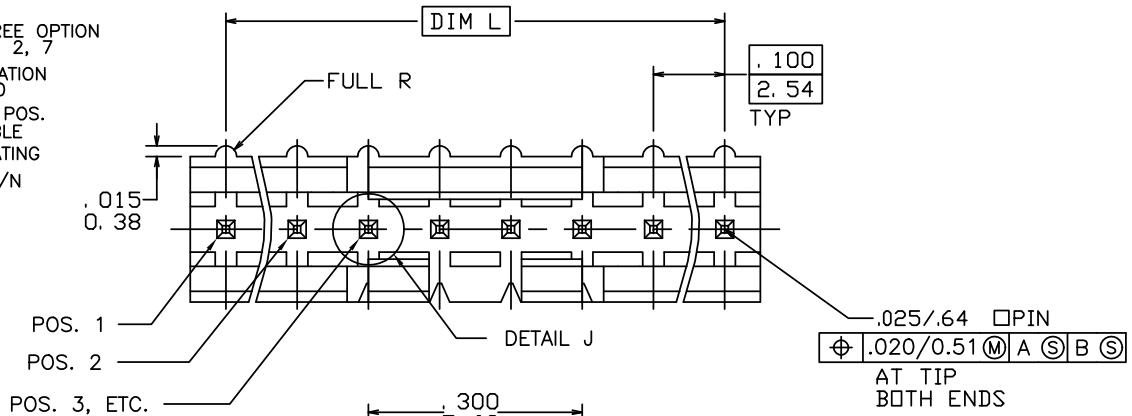

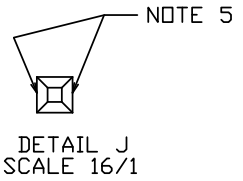

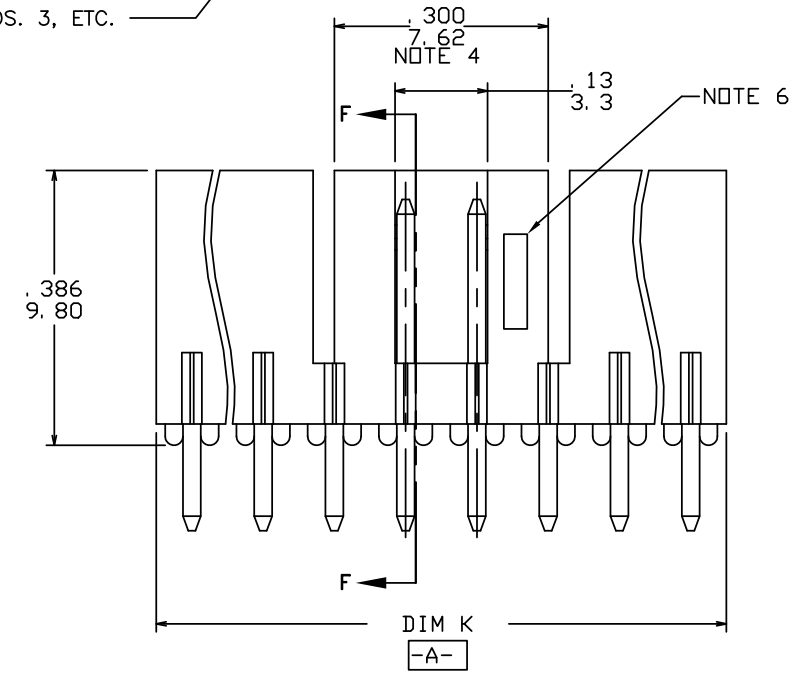

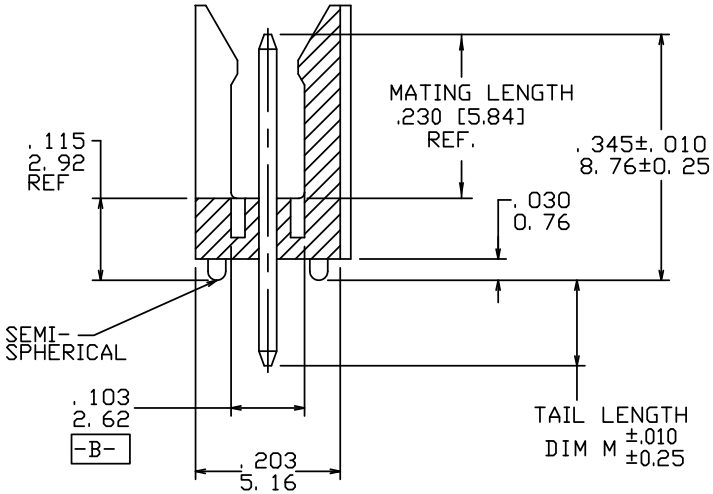

SECTION F-F

mat'l. code				surface ISO 1302	tolerance ISO 406 ISO 1101	projection	product family
							HEADER
ltr	ecn	nodr	date	tolerances unless otherwise specified			title
T	ELX-N-011886	JZ	2012-05-31	angles	linear .XX±.01/.X±0.3	INCH/MM	FRICTION LATCH HEADER SINGLE ROW VERTICAL
					.XXX±.005/.XX±0.13		
M	V03-0352	GIP	03/25/03	0°±2°	.XXXX±.0020/.XXX±0.051	scale 4:1	
N	M05-0134	MHT	6/17/05	dr	M.CLOUSER	11/27/90	
P	M05-0176	ERE	08/05/05	engr	C.TREXTLER	11/27/90	dwg no 69167 sheet 1 of 3 size A3
R	M06-0256	MHT	9/07/06	chr	C.TREXTLER	11/27/90	
S	M08-0291	MHT	10/06/08	appd	C.TREXTLER	11/27/90	type Product Customer Drawing

sheet	revision	T	T	T
index	sheet	1	2	3

Copyright FCI
FCIconnect.com

PRODUCT NUMBER	NO OF POS	DIM K	DIM L	TAIL LENGTH DIM M
69167-X03	1 X 3	.300/7.62	.200/5.08	.120/3.05
69167-X04	1 X 4	.400/10.16	.300/7.62	.120/3.05
69167-X05	1 X 5	.500/12.70	.400/10.16	.120/3.05
69167-X06	1 X 6	.600/15.24	.500/12.70	.120/3.05
69167-X07	1 X 7	.700/17.78	.600/15.24	.120/3.05
69167-X08	1 X 8	.800/20.32	.700/17.78	.120/3.05
69167-X09	1 X 9	.900/22.86	.800/20.32	.120/3.05
69167-X10	1 X 10	1.000/25.40	.900/22.86	.120/3.05
69167-X11	1 X 11	1.100/27.94	1.000/25.40	.120/3.05
69167-X12	1 X 12	1.200/30.48	1.100/27.94	.120/3.05
69167-X13	1 X 13	1.300/33.02	1.200/30.48	.120/3.05
69167-X14	1 X 14	1.400/35.56	1.300/33.02	.120/3.05
69167-X15	1 X 15	1.500/38.10	1.400/35.56	.120/3.05
69167-X16	1 X 16	UNAVAILABLE		
69167-X17	1 X 17	UNAVAILABLE		
69167-X18	1 X 18	UNAVAILABLE		
69167-X19	1 X 19	UNAVAILABLE		
69167-X20	1 X 20	UNAVAILABLE		
69167-X21	1 X 21	UNAVAILABLE		
69167-X22	1 X 22	UNAVAILABLE		
69167-X23	1 X 23	UNAVAILABLE		
69167-X24	1 X 24	UNAVAILABLE		
69167-X25	1 X 25	UNAVAILABLE		
69167-X26	1 X 26	UNAVAILABLE		
69167-X27	1 X 27	UNAVAILABLE		
69167-X28	1 X 28	UNAVAILABLE		
69167-X29	1 X 29	UNAVAILABLE		
69167-X30	1 X 30	UNAVAILABLE		
69167-X31	1 X 31	UNAVAILABLE		
69167-X32	1 X 32	UNAVAILABLE		
69167-X33	1 X 33	UNAVAILABLE		
69167-X34	1 X 34	UNAVAILABLE		
69167-X35	1 X 35	UNAVAILABLE		
69167-X36	1 X 36	UNAVAILABLE		

PIN PLATING CODES	
XXXXX-1YY	30u"/0.76u MIN (SEE NOTE 8) OVER 50u"/1.27u MIN Ni
XXXXX-2YY	15u"/0.38u MIN (SEE NOTE 8) OVER 50u"/1.27u MIN Ni
XXXXX-3YY	50u"/1.27u MIN (SEE NOTE 8) OVER 50u"/1.27u MIN Ni
XXXXX-4YY	100u"/2.54u MIN Sn OVER 50u"/1.27u MIN Ni (SEE NOTE 9)
XXXXX-4YYHLF	
XXXXX-5YY	15u"/0.38u MIN (SEE NOTE 8) OVER 50u"/1.27u MIN Ni
XXXXX-6YY	30u"/0.76u MIN (SEE NOTE 8) OVER 50u"/1.27u MIN Ni
XXXXX-7YY	30u"/0.76u MIN (SEE NOTE 8) OVER 50u"/1.27u MIN Ni
XXXXX-8YY	15u"/0.38u MIN (SEE NOTE 8) OVER 50u"/1.27u MIN Ni

NOTES:

1. PART NUMBER OPTIONS:
   PIN PLATING CODES (SEE ABOVE)
   LEAD FREE:
   ADD "HLF" AT THE END OF PART NUMBER FOR LEAD FREE OPTION, NOT AVAILABLE FOR -5YY, -5YYH, -6YY, -6YYH.

2. BODY MATERIAL:
   GLASS REINFORCED PCT COLOR: BLACK
   FLAME RETARDANT PER UL 94 V-0
   MAXIMUM OPERATING TEMPERATURE: 130° C
   OR
   MINERAL FILLED LCP, COLOR BLACK
   FLAME RETARDANT PER UL 94 V-0

   PART NUMBERS WITH "H" SUFFIX WILL WITHSTAND EXPOSURE TO 260°C PEAK TEMPERATURE FOR 20 SECONDS IN WAVE SOLDER, INFRA-RED OR VAPOR PHASE SOLDER PROCESS.

   PART NUMBERS WITHOUT "H" SUFFIX WILL WITHSTAND EXPOSURE TO 260°C PEAK TEMPERATURE FOR WAVE SOLDER PROCESS.

3. PIN MATERIAL: 3/4 HARD PHOS-BRONZE.

4. NO SLOTS ON 1 X 5 POSITION OR SMALLER PRODUCT. THE CENTER KEY SLOT WILL BE ON ALL HEADERS REGARDLESS OF SIZE.

5. TWO NON-CRITICAL SIDES OF PIN TIP NOT PLATED, BOTH ENDS

6. COMPANY LOGO MAY APPEAR IN THIS AREA.

7. THESE PRODUCTS MEET EUROPEAN UNION DIRECTIVES AND OTHER COUNTRY REGULATION AS DESCRIBED IN GS-22-008.

8. PLATING OPTIONS:
   PERFORMANCE PLATING WILL BE EITHER GOLD OR GXT ON CONTACT OR TAIL, OPTIONALLY (78~295u''/2~7.5u) TIN ON TAIL.

9. "THIS PRODUCT HAS 100% TIN PLATING IN THE INTERFACE AND HAS NOT BEEN TESTED FOR WHISKER GROWTH IN ALL INTERCONNECT ENVIRONMENTS."

10. FOR POLARIZATION, SPECIFY POSITION NUMBER (i.e. A03=ROW A POSITION 03) TO OMIT PIN.
    OMIT FROM PRODUCT NUMBER IF THIS FEATURE IS NOT APPLICABLE.
    PRODUCT MANAGEMENT APPROVAL REQUIRED PRIOR TO RELEASE OR SALE OF POLARIZED PRODUCT.

mat'l. code				surface ISO 1302		tolerance ISO 406 ISO 1101		projection	product family HEADER		
ltr	ecn	nodr	date	tolerances unless otherwise specified					title		
T				angles	linear	.XX±.01/.X±0.3		INCH/MM	FRICTION LATCH HEADER SINGLE ROW VERTICAL		
						.XXX±.005/.XX±0.13					
				0°±2°		.XXXX±.0020/.XXX±0.05		scale 4:1			
				dr	M.CLOUSER	11/27/90			dwg no 69167	sheet 2 of 3	size A3
				engr	C.TREXTLER	11/27/90					
				chr	C.TREXTLER	11/27/90					
				appd	C.TREXTLER	11/27/90			type Product Customer Drawing		
sheet index	revision sheet										

Copyright FCI

PRODUCT NUMBER	NO OF POS	DIM K	DIM L	TAIL LENGTH DIM M
69167-X43	1 X 3	.300/7.62	.200/5.08	.190/4.83
69167-X44	1 X 4	.400/10.16	.300/7.62	.190/4.83
69167-X45	1 X 5	.500/12.70	.400/10.16	.190/4.83
69167-X46	1 X 6	.600/15.24	.500/12.70	.190/4.83
69167-X47	1 X 7	.700/17.78	.600/15.24	.190/4.83
69167-X48	1 X 8	.800/20.32	.700/17.78	.190/4.83
69167-X49	1 X 9	.900/22.86	.800/20.32	.190/4.83
69167-X50	1 X 10	1.000/25.40	.900/22.86	.190/4.83
69167-X51	1 X 11	1.100/27.94	1.000/25.40	.190/4.83
69167-X52	1 X 12	1.200/30.48	1.100/27.94	.190/4.83
69167-X53	1 X 13	1.300/33.02	1.200/30.48	.190/4.83
69167-X54	1 X 14	1.400/35.56	1.300/33.02	.190/4.83
69167-X55	1 X 15	1.500/38.10	1.400/35.56	.190/4.83
69167-X56	1 X 16	UNA	VAILABLE	
69167-X57	1 X 17	UNA	VAILABLE	
69167-X58	1 X 18	UNA	VAILABLE	
69167-X59	1 X 19	UNA	VAILABLE	
69167-X60	1 X 20	UNA	VAILABLE	
69167-X61	1 X 21	UNA	VAILABLE	
69167-X62	1 X 22	UNA	VAILABLE	
69167-X63	1 X 23	UNA	VAILABLE	
69167-X64	1 X 24	UNA	VAILABLE	
69167-X65	1 X 25	UNA	VAILABLE	
69167-X66	1 X 26	UNA	VAILABLE	
69167-X67	1 X 27	UNA	VAILABLE	
69167-X68	1 X 28	UNA	VAILABLE	
69167-X69	1 X 29	UNA	VAILABLE	
69167-X70	1 X 30	UNA	VAILABLE	
69167-X71	1 X 31	UNA	VAILABLE	
69167-X72	1 X 32	UNA	VAILABLE	
69167-X73	1 X 33	UNA	VAILABLE	
69167-X74	1 X 34	UNA	VAILABLE	
69167-X75	1 X 35	UNA	VAILABLE	
69167-X76	1 X 36	UNA	VAILABLE	

FCIconnect.com
Copyright FCI

mat'l. code	surface ISO 1302	tolerance ISO 406 ISO 1101	projection	product family HEADER	
ltr ecn no dr date	tolerances unless otherwise specified			title FRICTION LATCH HEADER SINGLE ROW VERTICAL	
T	angles 0°±2°	linear .XX±.01/.X±0.3 .XXX±.005/.XX±0.13 .XXXX±.0020/.XXX±0.051	INCH/MM scale 4:1		
	dr	M.CLOUSER	11/27/90	dwg no 69167	sheet 3 of 3 size A3
	engr	C.TREXTLER	11/27/90		
	chr	C.TREXTLER	11/27/90		
	appd	C.TREXTLER	11/27/90	type Product Customer Drawing	
sheet index	revision sheet				