Dimensions: [mm]

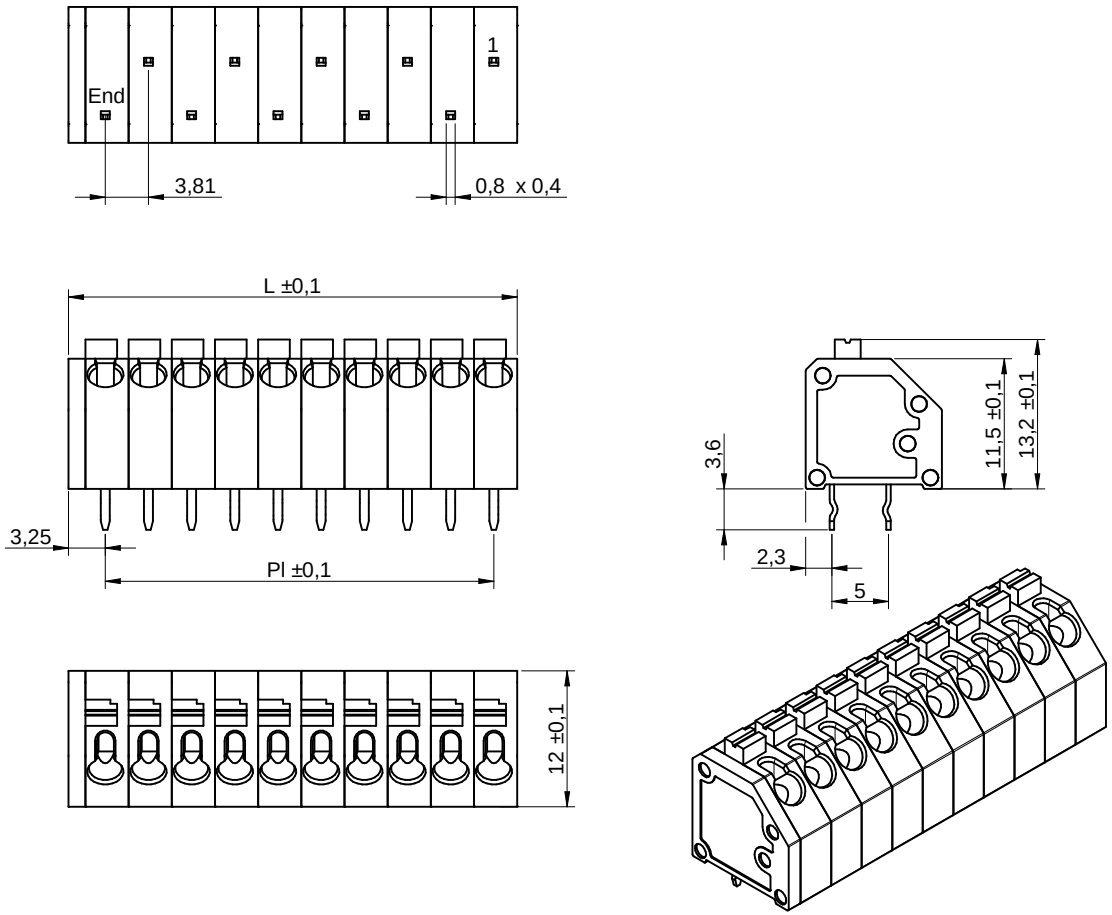

Recommended Hole Pattern: [mm]

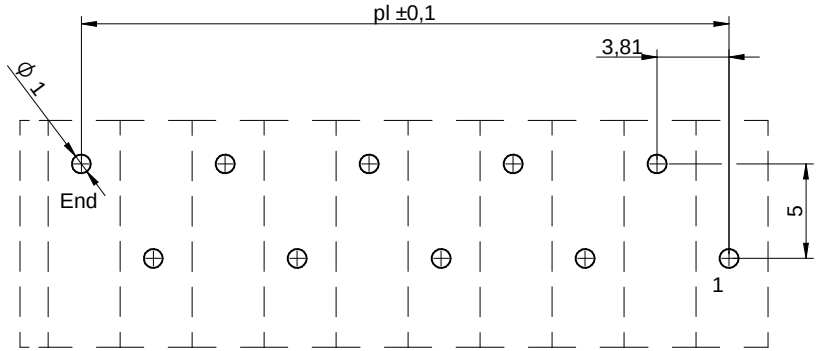

Article Properties:

Properties		Value	Unit
Pins		10	
Pin to Pin (Middle)	P_l	34.29	mm
Length	L	39.6	mm

Würth Elektronik eiSos GmbH & Co. KG
EMC & Inductive Solutions

Max-Eyth-Str. 1
74638 Waldenburg
Germany
Tel. +49 (0) 79 42 945 - 0

www.we-online.com
eiSos@we-online.com

CREATED	CHECKED	GENERAL TOLERANCE	PROJECTION METHOD
Xla	Fbr	DIN ISO 2768-1m	

DESCRIPTION
Serie 4123 - 3.81 mm Screwless 45° Entry WR-TBL

ORDER CODE
691 412 320 010

REVISION	STATUS	DATE	BUSINESS UNIT	PAGE
001.000	Valid	2016-08-05	eiCan	1/4

This electronic component has been designed and developed for usage in general electronic equipment only. This product is not authorized for use in equipment where a higher safety standard and reliability standard is especially required or where a failure of the product is reasonably expected to cause severe personal injury or death, unless the parties have executed an agreement specifically governing such use. Moreover Würth Elektronik eiSos GmbH & Co KG products are neither designed nor intended for use in areas such as military, aerospace, aviation, nuclear control, submarine, transportation (automotive control, train control, ship control), transportation signal, disaster prevention, medical, public information network etc.. Würth Elektronik eiSos GmbH & Co KG must be informed about the intent of such usage before the design-in stage. In addition, sufficient reliability evaluation checks for safety must be performed on every electronic component which is used in electrical circuits that require high safety and reliability functions or performance.

Article Properties:

Pins	P_I	L	Order Code
2	3.81 mm	9.12 mm	691 412 320 002
3	7.62 mm	12.93 mm	691 412 320 003
4	11.43 mm	16.74 mm	691 412 320 004
5	15.24 mm	20.55 mm	691 412 320 005
6	19.05 mm	24.36 mm	691 412 320 006
7	22.86 mm	28.17 mm	691 412 320 007
8	26.67 mm	31.98 mm	691 412 320 008
9	30.48 mm	35.79 mm	691 412 320 009
10	34.29 mm	39.60 mm	691 412 320 010
11	38.10 mm	43.47 mm	691 412 320 011
12	41.91 mm	47.22 mm	691 412 320 012
13	45.72 mm	51.03 mm	691 412 320 013

Kind Properties:

Properties	Value	Unit
Standard Polarities [1)]	02;03;04;05;06;07;08;09;10;11;12	
Pitch	3.81	mm

[1)] Delivery ex stock for standard polarities, non standard have extended leadtimes

Material Properties:

Insulator Material	PA6/66
Insulator Color	Grey
Insulator Flammability Rating	UL94-V0
Contact Material	Phosphor Bronze
Contact Plating	Tin
Wire Guard	Phosphor Bronze

General Properties:

Operating Temperature	-30 °C up to +120 °C
Compliance	Lead free / RoHS

Electrical Properties:

Properties	Test conditions		Value		Unit
			UL	VDE	
Rated Current		I_R	4	4	A
Working Voltage			300	450	V (AC)
Withstanding Voltage	1 min		1600	2500	V (AC)
Contact Resistance		R	20		mΩ

Mechanical Properties:

Wire Strip Length	7 (mm)

Wire Properties:

Solid Wire Section (Imperial)	16 to 30 (AWG)
Solid Wire Section (Metric)	1.31 to 0.05 (mm^2)
Stranded Wire Section (Imperial)	16 to 30 (AWG)
Stranded Wire Section (Metric)	1.31 to 0.05 (mm^2)

Standard:

UL Approval	E150931
VDE Approval	40013441

Packaging Properties:

Packaging	Box

Würth Elektronik eiSos GmbH & Co. KG
EMC & Inductive Solutions

Max-Eyth-Str. 1
74638 Waldenburg
Germany
Tel. +49 (0) 79 42 945 - 0

www.we-online.com
eiSos@we-online.com

WÜRTH ELEKTRONIK

CREATED	CHECKED	GENERAL TOLERANCE	PROJECTION METHOD
Xla	Fbr	DIN ISO 2768-1m	

DESCRIPTION
Serie 4123 - 3.81 mm Screwless 45° Entry WR-TBL

ORDER CODE
691 412 320 010

REVISION	STATUS	DATE	BUSINESS UNIT	PAGE
001.000	Valid	2016-08-05	eiCan	2/4

This electronic component has been designed and developed for usage in general electronic equipment only. This product is not authorized for use in equipment where a higher safety standard and reliability standard is especially required or where a failure of the product is reasonably expected to cause severe personal injury or death, unless the parties have executed an agreement specifically governing such use. Moreover Würth Elektronik eiSos GmbH & Co KG products are neither designed nor intended for use in areas such as military, aerospace, aviation, nuclear control, submarine, transportation (automotive control, train control, ship control), transportation signal, disaster prevention, medical, public information network etc.. Würth Elektronik eiSos GmbH & Co KG must be informed about the intent of such usage before the design-in stage. In addition, sufficient reliability evaluation checks for safety must be performed on every electronic component which is used in electrical circuits that require high safety and reliability functions or performance.

Classification Wave Soldering Profile:

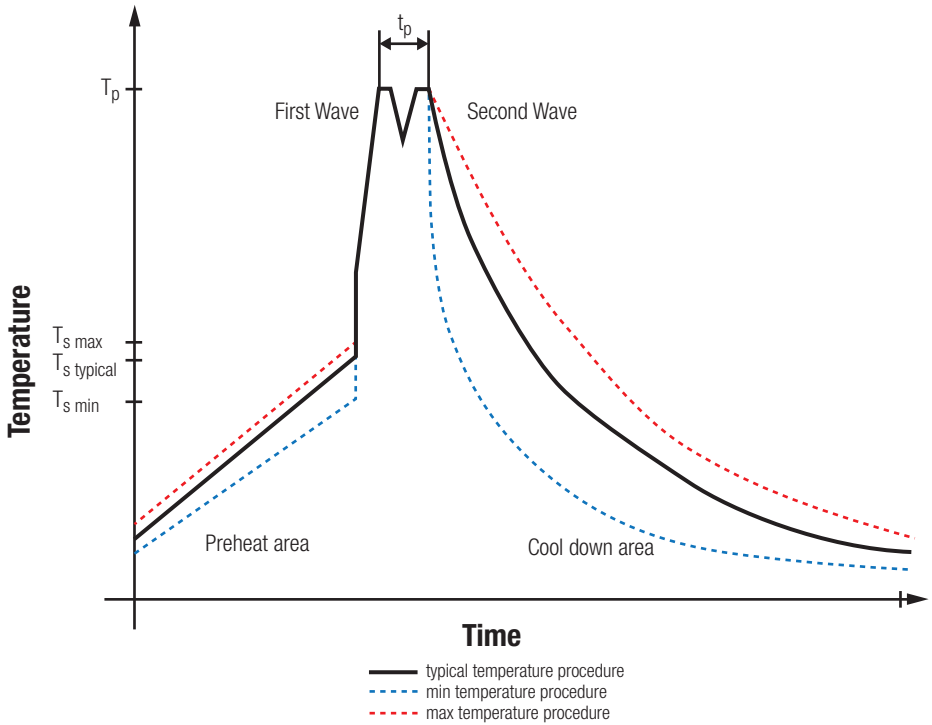

Classification Wave Soldering Profile:

Profile Feature		Pb-Free Assembly	Sn-Pb Assembly
Preheat Temperature Min [1)]	$T_{s\ min}$	100 °C	100 °C
Preheat Temperature Typical	$T_{s\ typical}$	120 °C	120 °C
Preheat Temperature Max	$T_{s\ max}$	130 °C	130 °C
Preheat Time t_s from $T_{s\ min}$ to $T_{s\ max}$	t_s	70 seconds	70 seconds
Ramp-up Rate	Δ T	150 °C max.	150 °C max.
Peak temperature	T_p	250 °C - 260 °C	235 °C - 260 °C
Time of actual peak temperature	t_p	max. 10 seconds max. 5 seconds each wave	max. 10 seconds max. 5 seconds each wave
Ramp-down Rate, Min		~ 2 K/ second	~ 2 K/ second
Ramp-down Rate, Typical		~ 3.5 K/ second	~ 3.5 K/ second
Ramp-down Rate, Max		~ 5 K/ second	~ 5 K/ second
Time 25°C to 25°C		4 minutes	4 minutes

[1)] refer to EN61760-1:2006
refer to EN61760-1:2006

Würth Elektronik eiSos GmbH & Co. KG
EMC & Inductive Solutions

Max-Eyth-Str. 1
74638 Waldenburg
Germany
Tel. +49 (0) 79 42 945 - 0

www.we-online.com
eiSos@we-online.com

WÜRTH ELEKTRONIK

CREATED	CHECKED	GENERAL TOLERANCE	PROJECTION METHOD
Xla	Fbr	DIN ISO 2768-1m	

DESCRIPTION
Serie 4123 - 3.81 mm Screwless 45° Entry WR-TBL

ORDER CODE
691 412 320 010

REVISION	STATUS	DATE	BUSINESS UNIT	PAGE
001.000	Valid	2016-08-05	eiCan	3/4

This electronic component has been designed and developed for usage in general electronic equipment only. This product is not authorized for use in equipment where a higher safety standard and reliability standard is especially required or where a failure of the product is reasonably expected to cause severe personal injury or death, unless the parties have executed an agreement specifically governing such use. Moreover Würth Elektronik eiSos GmbH & Co KG products are neither designed nor intended for use in areas such as military, aerospace, aviation, nuclear control, submarine, transportation (automotive control, train control, ship control), transportation signal, disaster prevention, medical, public information network etc.. Würth Elektronik eiSos GmbH & Co KG must be informed about the intent of such usage before the design-in stage. In addition, sufficient reliability evaluation checks for safety must be performed on every electronic component which is used in electrical circuits that require high safety and reliability functions or performance.

Important Notes

The following conditions apply to all goods within the product range of Würth Elektronik eiSos GmbH & Co. KG:

1. General Customer Responsibility

Some goods within the product range of Würth Elektronik eiSos GmbH & Co. KG contain statements regarding general suitability for certain application areas. These statements about suitability are based on our knowledge and experience of typical requirements concerning the areas, serve as general guidance and cannot be estimated as binding statements about the suitability for a customer application. The responsibility for the applicability and use in a particular customer design is always solely within the authority of the customer. Due to this fact it is up to the customer to evaluate, where appropriate to investigate and decide whether the device with the specific product characteristics described in the product specification is valid and suitable for the respective customer application or not.

2. Customer Responsibility related to Specific, in particular Safety-Relevant Applications

It has to be clearly pointed out that the possibility of a malfunction of electronic components or failure before the end of the usual lifetime cannot be completely eliminated in the current state of the art, even if the products are operated within the range of the specifications. In certain customer applications requiring a very high level of safety and especially in customer applications in which the malfunction or failure of an electronic component could endanger human life or health it must be ensured by most advanced technological aid of suitable design of the customer application that no injury or damage is caused to third parties in the event of malfunction or failure of an electronic component. Therefore, customer is cautioned to verify that data sheets are current before placing orders. The current data sheets can be downloaded at www.we-online.com.

3. Best Care and Attention

Any product-specific notes, cautions and warnings must be strictly observed. Any disregard will result in the loss of warranty.

4. Customer Support for Product Specifications

Some products within the product range may contain substances which are subject to restrictions in certain jurisdictions in order to serve specific technical requirements. Necessary information is available on request. In this case the field sales engineer or the internal sales person in charge should be contacted who will be happy to support in this matter.

5. Product R&D

Due to constant product improvement product specifications may change from time to time. As a standard reporting procedure of the Product Change Notification (PCN) according to the JEDEC-Standard inform about minor and major changes. In case of further queries regarding the PCN, the field sales engineer or the internal sales person in charge should be contacted. The basic responsibility of the customer as per Section 1 and 2 remains unaffected.

6. Product Life Cycle

Due to technical progress and economical evaluation we also reserve the right to discontinue production and delivery of products. As a standard reporting procedure of the Product Termination Notification (PTN) according to the JEDEC-Standard we will inform at an early stage about inevitable product discontinuance. According to this we cannot guarantee that all products within our product range will always be available. Therefore it needs to be verified with the field sales engineer or the internal sales person in charge about the current product availability expectancy before or when the product for application design-in disposal is considered. The approach named above does not apply in the case of individual agreements deviating from the foregoing for customer-specific products.

7. Property Rights

All the rights for contractual products produced by Würth Elektronik eiSos GmbH & Co. KG on the basis of ideas, development contracts as well as models or templates that are subject to copyright, patent or commercial protection supplied to the customer will remain with Würth Elektronik eiSos GmbH & Co. KG. Würth Elektronik eiSos GmbH & Co. KG does not warrant or represent that any license, either expressed or implied, is granted under any patent right, copyright, mask work right, or other intellectual property right relating to any combination, application, or process in which Würth Elektronik eiSos GmbH & Co. KG components or services are used.

8. General Terms and Conditions

Unless otherwise agreed in individual contracts, all orders are subject to the current version of the “General Terms and Conditions of Würth Elektronik eiSos Group”, last version available at www.we-online.com.

Würth Elektronik eiSos GmbH & Co. KG
EMC & Inductive Solutions

Max-Eyth-Str. 1
74638 Waldenburg
Germany
Tel. +49 (0) 79 42 945 - 0

www.we-online.com
eiSos@we-online.com

WÜRTH ELEKTRONIK

CREATED	CHECKED	GENERAL TOLERANCE	PROJECTION METHOD
Xla	Fbr	DIN ISO 2768-1m	

DESCRIPTION
Serie 4123 - 3.81 mm Screwless 45° Entry WR-TBL

ORDER CODE
691 412 320 010

REVISION	STATUS	DATE	BUSINESS UNIT	PAGE
001.000	Valid	2016-08-05	eiCan	4/4

This electronic component has been designed and developed for usage in general electronic equipment only. This product is not authorized for use in equipment where a higher safety standard and reliability standard is especially required or where a failure of the product is reasonably expected to cause severe personal injury or death, unless the parties have executed an agreement specifically governing such use. Moreover Würth Elektronik eiSos GmbH & Co KG products are neither designed nor intended for use in areas such as military, aerospace, aviation, nuclear control, submarine, transportation (automotive control, train control, ship control), transportation signal, disaster prevention, medical, public information network etc.. Würth Elektronik eiSos GmbH & Co KG must be informed about the intent of such usage before the design-in stage. In addition, sufficient reliability evaluation checks for safety must be performed on every electronic component which is used in electrical circuits that require high safety and reliability functions or performance.