This document was generated on 10/08/2014

PLEASE CHECK WWW.MOLEX.COM FOR LATEST PART INFORMATION

Part Number: 38660-7611
Status: Active
Overview: Beau™ Barrier Strips
Description: 12.70mm Pitch Beau™ PCB Tri-Barrier Terminal Strip, with Mounting Ends, 600V, 11 Circuits

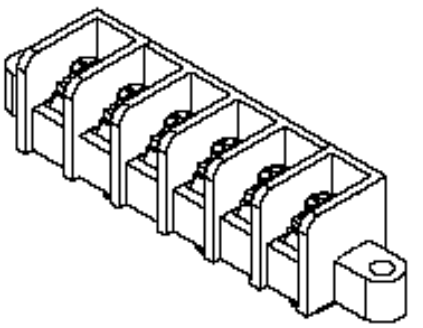

Series image - Reference only

Documents:
3D Model
Drawing (PDF)
RoHS Certificate of Compliance (PDF)

General

Product Family	Terminal Blocks
Series	38660
Application	N/A
Component Type	One Piece
Overview	Beau™ Barrier Strips
Product Name	Fixed Mount Barrier
Type	Barrier Strip
UPC	822350154581

Physical

Circuits (Loaded)	11
Circuits (maximum)	11
Color - Resin	Black
Entry Angle	Horizontal
Lock to Mating Part	None
Material - Metal	Brass
Material - Plating Mating	Tin
Material - Plating Termination	Tin
Material - Resin	Polysulfone
Net Weight	121.049/g
Number of Rows	1
Orientation	Vertical
PC Tail Length	4.06mm
PCB Retention	Yes
Panel Mount	No
Pitch - Mating Interface	12.70mm
Pitch - Termination Interface	12.70mm
Polarized to Mating Part	N/A
Shrouded	Tri-Barrier
Stackable	No
Surface Mount Compatible (SMC)	No
Temperature Range - Operating	-40°C to +160°C
Wire Size AWG	10, 12, 14, 16, 18, 8
Wire Size mm²	0.75 - 6.0

Electrical

Current - Maximum per Contact	45A
Voltage - Maximum	600V

Material Info

Old Part Number	66511-E

Reference - Drawing Numbers

Sales Drawing	SD-38660-002

EU RoHS
Not RoHS Compliant
REACH SVHC
Not Reviewed
Low-Halogen Status
Not Reviewed

China RoHS

Need more information on product environmental compliance?

Email productcompliance@molex.com
For a multiple part number RoHS Certificate of Compliance, click here

Please visit the Contact Us section for any non-product compliance questions.

Search Parts in this Series
38660Series

Mates With
N/A

This document was generated on 10/08/2014

PLEASE CHECK WWW.MOLEX.COM FOR LATEST PART INFORMATION