Pomona ELECTRONICS

Technical Data Sheet

Model 6574

Alligator Clip with Boot for standard test probe tip, .080” (2mm)

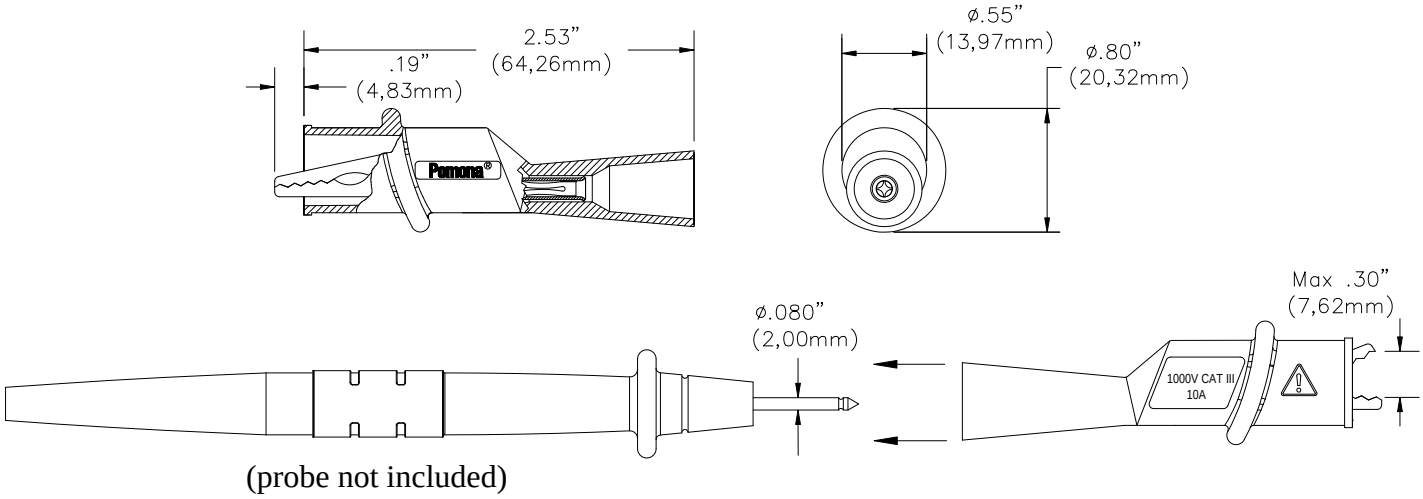

Features

- Complies with International Safety Standard IEC 61010-2-031.
- Alligator will clip around terminals up to .30” (7.62mm) outside diameter.
- Attaches to standard .080” (2mm) style test probe, such as the Pomona model 5519A.

Materials

Alligator Clip: Nickel plated steel
Boot: Santoprene rubber



Ratings

Operating Voltage: 1000V, Category III
Current: 10 Amperes
Temperature: -13º to 176º F (-25º to 80º C)

Ordering Information

Model: 6574-02	(two alligator clips, one red boot and one black boot)
Model: 6574-0/10PK	(a package of 10 alligator clips and black boots)
Model: 6574-2/10PK	(a package of 10 alligator clips and red boots)

USA: Sales: 800-490-2361
Technical Support: technicalsupport@pomonatest.com
Fax: 425-446-5844
Europe: 31-(0) 40 2675 150 **International:** 425-446-5500
Where to Buy: www.pomonaelectronics.com

All dimensions are in inches. Tolerances (except noted): .xx = ±.02” (,51 mm), .xxx = ± .005” (,127 mm). All specifications are to the latest revisions. Specifications are subject to change without notice. Registered trademarks are the property of their respective companies.

Copyright © 2009

Model 6574

Alligator Clip with Boot for standard test probe tip, .080” (2mm)

CE

Pomona®

The items included with this product are certified to meet IEC 1010-2-031 safety requirements.

Les éléments inclus avec ce produit sont certifies pour répondre à des exigences de sûreté du IEC 1010-2-031.

Los items incluidos con este producto se certifican para resolver requisitos de seguridad del IEC 1010-2-031.

- Only IEC 1010 type shrouded test plugs should be used with IEC 1010 type jacks. NEVER INSERT A PROBE TIP WITH BANANA SPRING INTO A TEST ACCESSORY JACK THAT WILL BE USED AS A HAND HELD PROBING DEVICE

-Seuls les vérificateurs de tension renforcés de type IEC 1010 devraient être utilisés avec des jacks de type IEC 1010. NE JAMAIS INSERER DE BOUT DE SONDE AVEC RESSORT BANANE DANS UN JACK D'ESSAI D'ACCESSOIRES QUI SERA UTILISE COMME DISPOSITIF DE SONDAGE A MAIN.

-Se deben usar sólo tapones de prueba reforzados del tipo IEC 1010 con receptáculos de tipo IEC 1010. NUNCA INTRODUZCA UNA CLAVIJA CON UN MUELLE TIPO BANANA EN UN RECEPTACULO DE PRUEBA QUE A SU VEZ SE USE COMO APARATO DE PRUEBA MANUAL.

≂ Both Direct and Alternating Current.
Courant Continu et Alternatif.
Corriente Directa y Alterna.

Double Insulation or Reinforced Insulation.
Isolation Double ou Isolation Renforée.
Aislamiento Doble o Aislamiento Reforzado.

CAT Overvoltage Category I, II, III or IV.
Surtension Catégorie I, II, III ou IV.
Sobretensión de Categoría I, II III o IV.

Caution ! Refer to Accompanying Documents.
Attention ! Se Reporter aux Documentsjoints.
¡Peligro! Consulte los Documentos Adjuntos.

Caution ! Risk of Electric Shock.
Attention ! Risque de Choc Électrique.
¡Peligro! Riesgo de Sacudida Eléctrica.

Pomona Electronics

PO Box 9090, Everett, WA 98206-9090 TEL: 800-490-2361

CE

USA: Sales: 800-490-2361
Technical Support: technicalsupport@pomonatest.com
Fax: 425-446-5844
Europe: 31-(0) 40 2675 150 **International:** 425-446-5500
Where to Buy: www.pomonaelectronics.com

All dimensions are in inches. Tolerances (except noted): .xx = ±.02” (,51 mm), .xxx = ± .005” (,127 mm). All specifications are to the latest revisions. Specifications are subject to change without notice. Registered trademarks are the property of their respective companies.

Copyright © 2009